TEMPORARY REVISION 3-336

Filing Instructions
This is a DC-10 Systems Description Temporary Revision (TR). Place this TR in front of the Table of Contents in the Engines Chapter of Volume III. Please retain this TR until notified to remove it.

Effectivity
All

Description and Reason
NOTE: Important Safety Information.

This TR adds a description of the modification that revises the thrust reverser indications on the center instrument panel per DC-10 Service Bulletin DC10 78-060. In addition, information is added to this functional description regarding the operation of the thrust reverser indication system with Synchronous shaft (SYNC) locks added per DC-10 Service Bulletins DC10-78-063 and DC10-78-064. This modification retains the REVERSER UNLOCK and REVERSE THRUST functions but changes the nomenclature to REV U/L and REV THR and adds a REV PRES light for each engine.

The REV PRES light illuminates when the thrust reverser actuation system is pressurized or if a SYNC Lock is unlocked. The light will normally illuminate every time the thrust reversers are in transition to the deployed position and while the thrust reverser is in transition to the stowed position and should extinguish within 5 seconds of the REV U/L light extinguishing. If the light illuminates during or after takeoff, it indicates that a failure in the system has taken place. If this occurs the pilot is required to take specific actions, including disconnecting autothrottle. In this case maintenance is required before the next flight.

If the REV PRES light is illuminated prior to takeoff, maintenance is required before flight. If the light is inoperative the crew will not know that the thrust reverser actuation system is pressurized.

During normal T/R deployment, the flight engineer monitors the thrust reverser indications on the center instrument panel, to notify the pilot that he has all reversers deployed. If any Reverser Indicator Light does NOT illuminate when it is supposed to, it must be logged for maintenance before the next flight.

THRUST REVERSER INDICATION ENHANCEMENT

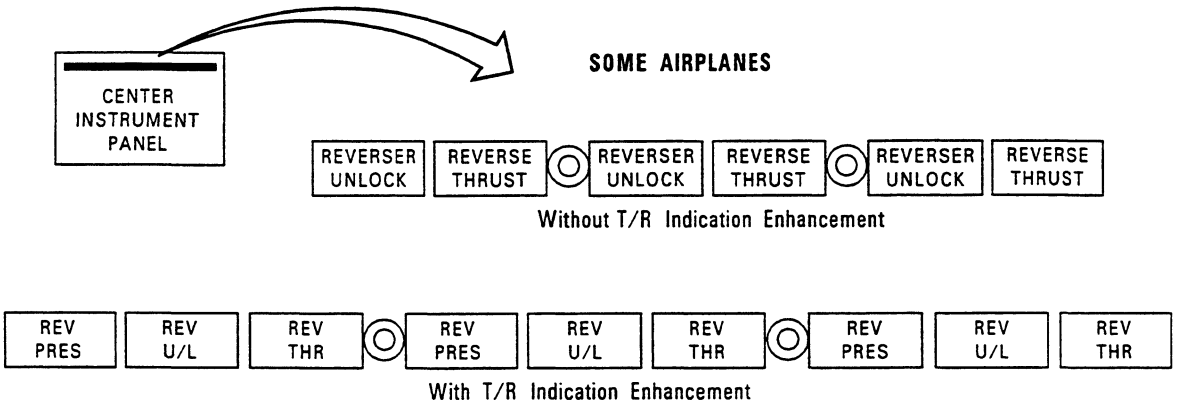

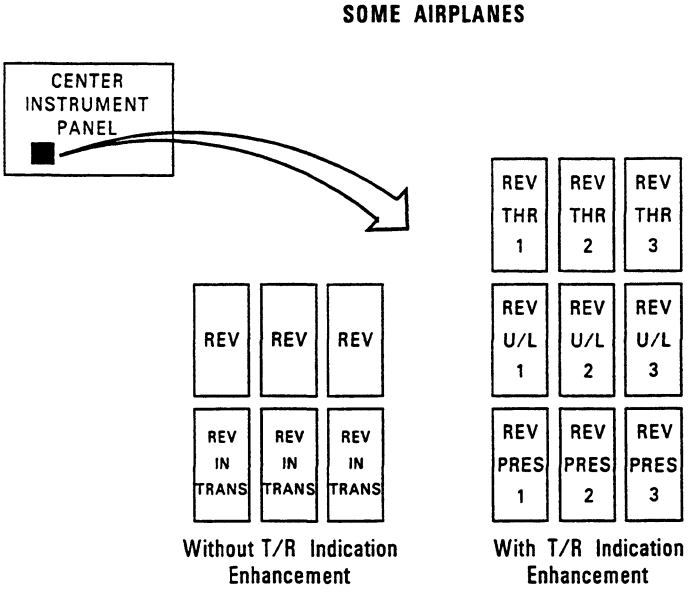

CAG(IGDS)

CA1-9417

CHAPTER 17
POWERPLANT

POWERPLANT

GENERAL

The aircraft is equipped with three Pratt & Whitney JT9D engines. Each engine has dual rotors; a low pressure compressor (N_1) incorporating a high bypass ratio fan, and a high pressure compressor (N_2). A multiple stage (low and high pressure) turbine drives the compressors and fan. The fan exhaust cowl contains fan thrust reversers. Thrust reversers for all three engines are identical.

DESCRIPTION

IGNITION SYSTEM

A dual ignition system is provided for each engine. Each system is controlled by an engine ignition selector switch and an override and airstart switch. Ignition system A is powered by the left emergency ac bus and system B is powered by the right emergency ac bus. Each system has an individual starting ignition system and a continuous ignition system control mode. To energize the igniter plugs in a selected engine when using the START A or B positions, the applicable starter button must be pushed and the applicable engine fuel lever must be moved out of the OFF position. Moving the lever toward ENRICH START or ON will energize the ignition system prior to initiating fuel flow. The lever is moved to ENRICH START or ON position at 16% N_2 rotor speed depending on temperature conditions. As the N_2 rotor accelerates to approximately 45% N_2 rpm the start switch holding circuit is deenergized and the engine starter switch pops out, discontinuing starting and ignition. The CONT A or B positions require only that the engine fuel lever be ON. A single override and airstart switch is provided for all three engines. The override and airstart switch bypasses the fuel lever switch, start switch, and the engine ignition selector switch to provide dual ignition to all engines simultaneously. It also provides power to the start switch, should starter assist be required for a restart.

On airplanes with Service Bulletin 74-2 incorporated or production equivalent, the ignition exciter power transfer switches enhance airplane dispatch reliability. The switches allow the power source for the B ignitors on engines 1 and 3 to be transferred from the right emergency ac bus to the left emergency ac bus and the power source for the A ignitors on engines 1 and 3 to be transferred from the left emergency ac bus to the right emergency ac bus. The switches are intended for use on the ground prior to engine start if system A ignition is inoperative.

STARTING SYSTEM

The engines can be started by pneumatic power from an external source, the on-board APU, or any operating main engine. During engine start using the APU, the APU will operate automatically at N_1 speeds up to 100% in normal control to provide higher starting pressure. Starting pressure from any source is indicated by an applicable pneumatic system pressure gage, depending upon source and the positions of the isolation valves. Each individual start switch, when pushed, is magnetically held if the engine ignition selector is in one of two starting positions provided, or if the override and air start switch is at OVRD & AIR START position. When pushed and held, a light in the switch will come on to indicate the associated engine start valve is open. As engine N_2 rotor cranking speed reaches approximately 45% rpm, the starter switch should pop out automatically and the light will go off, indicating the start valve has closed. The start sequence may be terminated at any time by manually disengaging the start switch. For air start requirements, the starters can be engaged at any engine speed up to 20% N_2 rpm.

FUEL CONTROL SYSTEM

Fuel from the applicable wing tank enters the two stage engine-driven pump, then passes through the fuel heater, the fuel filter, the fuel control unit, the fuel flow transmitter, fuel/oil cooler and the fuel manifold. The fuel control unit contains a shutoff valve controlled by a fuel lever on the pedestal. Fuel moving through the fuel heater is heated to prevent fuel system icing. A pressure differential switch is provided across the main fuel filter which will activate an ICING light indicating impending clogging of the filter. If the filter clogs to a predetermined degree, fuel will bypass the filter to maintain flow to the engine. A fuel temperature selector switch is provided to indicate the fuel temperature at either of the three engines or at number 3 fuel tank. A switch is provided for each engine fuel heat system and a light is provided to indicate when the fuel heat valves are on.

A dual idle speed feature is incorporated in the fuel control. The ground/flight idle system automatically provides a low or high engine N_2 idle rpm. Ground (low rpm) idle is the minimum operating rpm of the N_2 and is intended to minimize thrust, fuel burn, noise and jet blast. Flight (high rpm) idle provides an increased rpm which permits rapid response to throttle lever advancement, reducing the time required to attain high thrust. The ground and flight idle modes are controlled by the ground control relays, the ground shift reverts to flight idle at liftoff and returns to ground idle upon nose gear contact after landing.

Ground idle is automatically provided in flight during descent when the throttles are positioned to forward idle. All engines will automatically revert to flight idle when any one of the following occurs:

- One or more engine pneumatic supply selectors are rotated to OFF.
- Engine 1 and/or 3 anti-ice switch(es) are moved to ON.
- One or more pack function selectors are rotated to PACK OFF.
- Flaps are extended.
- Slats are extended.
- Gear handle is moved to DOWN.
- Main gear alternate gear extension lever is raised.

The engine requires a relatively long time to accelerate from ground idle to flight idle. An interlock prevents overboost in the autothrottle mode of operation by halting autothrottle lever advance at partial throttle, momentarily, before continuing to advance. In the event of a rapid autothrottle advance out of the idle position, the pause at partial throttle provides time for the engines to accelerate to an rpm level where the engines are rapidly responsive to throttle position thus providing positive autothrottle control of engine N_1 levels.

On aircraft with Performance Management System (PMS) installed, when performance mode is selected, the PMS computer unit determines top of descent (TOD) point at which time the descent from cruise to holding altitude is initiated. With ground idle descent logic satisfied prior to TOD, the PMS computes a later descent point to take advantage of fuel savings provided by ground idle descent.

OIL SYSTEM

Each engine oil system is completely self-contained. Oil for engine lubrication is supplied by an oil tank mounted on the engine accessory section. Oil is pumped under pressure to the engine and is maintained at proper pressure by a pressure regulator. Temperature is controlled automatically by the fuel/oil cooler prior to engine entry. Oil returns through oil scavenge pump and filter to tank. Oil quantity, pressure, and temperature gages are provided to indicate conditions of the oil system. Oil pressure and oil strainer clog warning lights indicate impending oil problems. If the filter clogs to a predetermined degree, the oil will bypass the filter to maintain flow to the engine.

VIBRATION INDICATING SYSTEM

Engine vibration is sensed by two vibration pickups mounted on each engine. Diffuser case and turbine rear flange are monitored for vibration velocity.

ENGINE FAILURE DETECTOR SYSTEM

A N_1 difference detector alerts the flight crew of engine thrust loss on any of the three engines during takeoff ground roll by turning on the ENG FAIL lights.

THRUST REVERSING SYSTEM

The thrust reverser system, for each engine, is powered by regulated pneumatic pressure from the engine. Each system is operated by the movement of the associated thrust reverser lever. The reverser levers, mounted on the throttles, cannot be moved (raised to the reverse thrust position) unless the applicable throttle is in the idle position. To deploy the thrust reverser, the reverser lever is raised to the reverse thrust interlock (idle detent) position, where a mechanical stop at the reverse idle detent position prevents any increase in thrust until the reverser is fully deployed. With all reversers deployed, reverse thrust can be increased symmetrically after reverser lever interlocks are released.

On aircraft with Service Bulletin 78-40 incorporated or production equivalent, an in-flight reverse thrust interlock prevents deployment of the thrust reversers unless the landing gear is down.

Initial reverser lever movement unlocks the respective system, starts reverser deployment which is indicated by the REVERSER UNLOCK and REVERSER VALVE OPEN lights coming on. The reverser system, when fully deployed, will release the reverser lever interlocks for engine 1 and 3. For engine 2 reverser lever interlock release, full reverser deployment and nose gear ground shift mechanism actuation is required.

With interlock release, the REVERSE THRUST light comes on, the REVERSER UNLOCK and REVERSER VALVE OPEN lights go off and the reverser lever can then be raised past reverse idle detent into the reverse thrust power range.

When reducing reverse thrust, the reverser lever can be returned to the reverse idle detent position. This position is felt as a slight increase in resistance to lever movement. There are no interlocks at any

Printed in U.S.A.

intermediate position when coming out of reverse thrust. To stow the reverser, the reverser lever is moved through the reverse idle detent position to the forward idle position. As the reverser starts to stow, the REVERSE THRUST light goes off and stays off. The REVERSER UNLOCK and REVERSER VALVE OPEN lights come on and stay on during the stow transit and go off when the reverser is fully stowed.

Mechanically, reverse thrust is accomplished by aft movement of sections of the outer nacelle nozzles which exposes fixed cascades and by sealing off the fan exhaust ducts which causes fan exhaust to discharge through the cascades producing decelerating thrust vectors.

If a failure occurs, aerodynamic forces and mechanical loads on the reverser tend to hold the reverser in the last selected position. If the reverser is deployed, and control system failures start the stow cycle, the reverser lever will return to the reverse idle detent position.

THRUST COMPUTER INDICATOR

The thrust computer indicator presents digital displays of total air temperature (TAT) and thrust rating parameters (EPR LIM), provides a means of manually selecting an operational flight mode, indicates (by thrust select switch-lights) the active mode, and displays failure annunciation (by flags, by digital readout, and by thrust select switch-light going off).

The thrust computer utilizes input from the central air data computer (CADC), total air temperature (TAT) sensing, pressure altitude data, bleed air sensing, and EPR transducers (to determine the fastest engine and/or an engine out condition) to compute the respective EPR limit for the selected flight mode. The EPR limit is updated continuously as the aircraft environment changes.

The following controls which direct engine bleed air affect the thrust computer computation:

1. ENG PNEU SUPPLY selectors.
2. The 1-2 and/or 1-3 ISOL VALVE switches.
3. WING & ANT ANTI-ICE switch.
4. Air conditioning PACK function selectors.
5. ENG ANTI-ICE switches.

A monitor circuit performs an internal self-test twice a second to verify the reliability of the computations. Failure of the thrust computer indicator, CADC, or thrust computer is indicated by the active thrust select switch-light going off. Failure flags partially obscure the EPR LIM and/or TAT readout but the readout may still be read for system analysis as follows:

1. Failure of TAT information causes display to read -50°C TAT and flag to appear.
2. Failure of CADC input to the thrust computer causes display to read 1.55 EPR LIM and flag to appear.
3. Failure of thrust computer causes display to read 1.99 EPR LIM and flag to appear.

Printed in U.S.A.

Absence of input to the thrust computer indicator for more than 3 seconds causes the EPR LIM flag to appear as is the case when there is a difference in the mode selected and the mode that the thrust computer is in.

CONTROLS AND INDICATORS

Controls, indicators, and annunciator lights are on the Pilot's Pedestal, Center Instrument Panel, Overhead Panel, and Flight Engineer's Lower Panel. Illustrations of these panels are in Chapter 1. Individual controls and indicators are illustrated and described in another section of this chapter.

EXHAUST VELOCITIES
JT9D-59A ENGINES

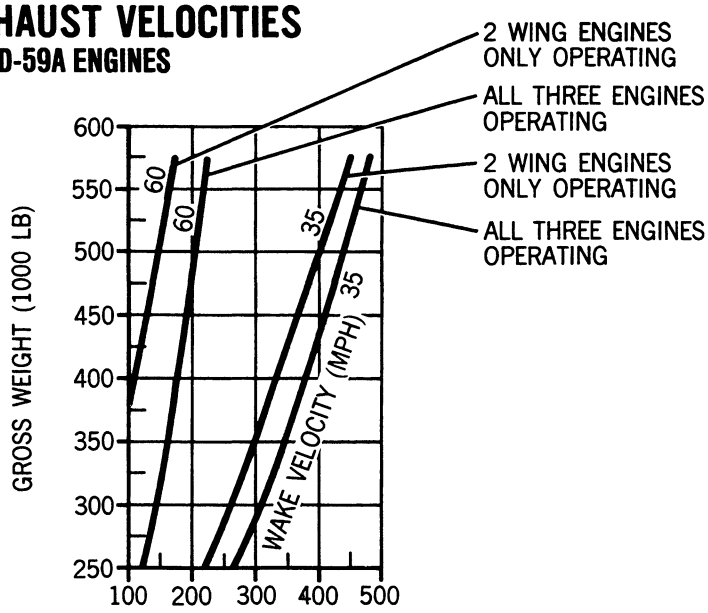

DISTANCE (FEET) REQUIRED BEHIND AIRPLANE TO PREVENT EXCEEDING THE WAKE VELOCITIES

BREAKAWAY POWER

NOTES

1. THESE CONTOURS ARE TO BE USED AS GUIDELINES ONLY SINCE OPERATIONAL ENVIRONMENT VARIES GREATLY — OPERATIONAL SAFETY ASPECTS ARE THE RESPONSIBILITY OF THE USER/PLANNER.
2. ALL VELOCITY VALUES ARE STATUTE MILES/HOUR.
3. CROSSWINDS WILL HAVE CONSIDERABLE EFFECT ON CONTOURS.
4. RAMP GRADIENT WILL AFFECT REQUIRED TAXI AND BREAKAWAY THRUST.
5. SEA LEVEL STATIC — STANDARD DAY.
6. ALL ENGINES AT SAME THRUST.

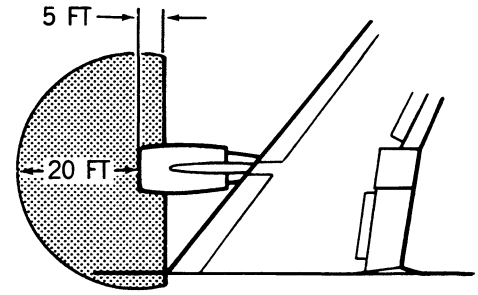

WARNING

INTAKE RESTRICTED AREA
AVOID SHADED AREA

PLAN VIEW

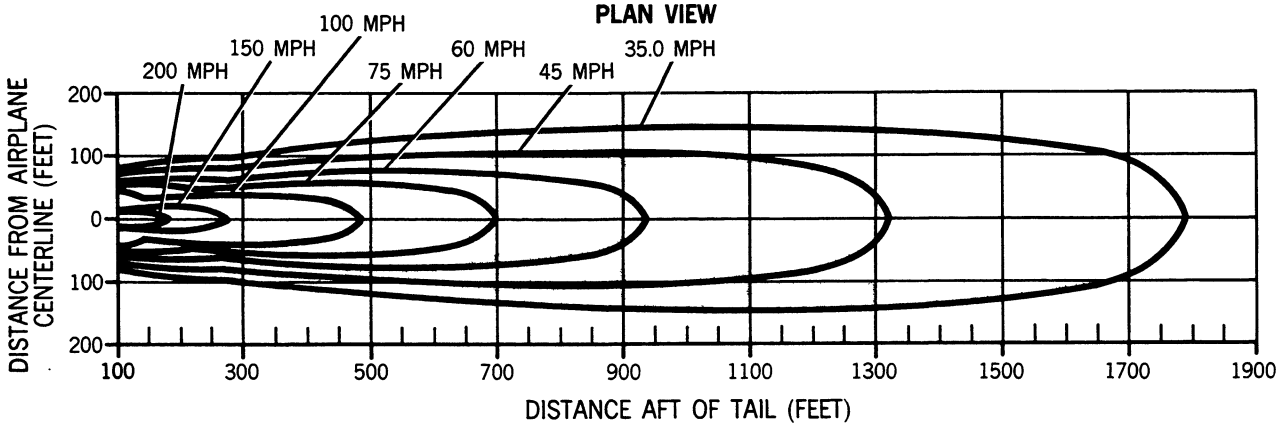

PROFILE

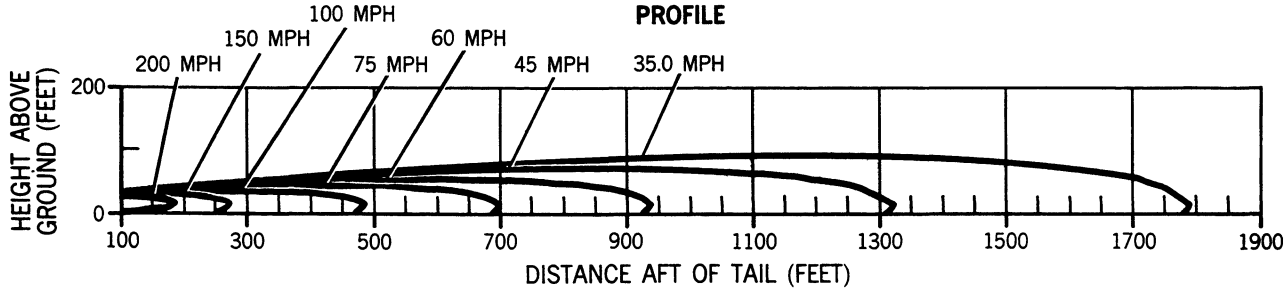

TAKEOFF POWER (WET)

CA1-4442A

EXHAUST WAKE VELOCITIES
JT9D-59A ENGINES

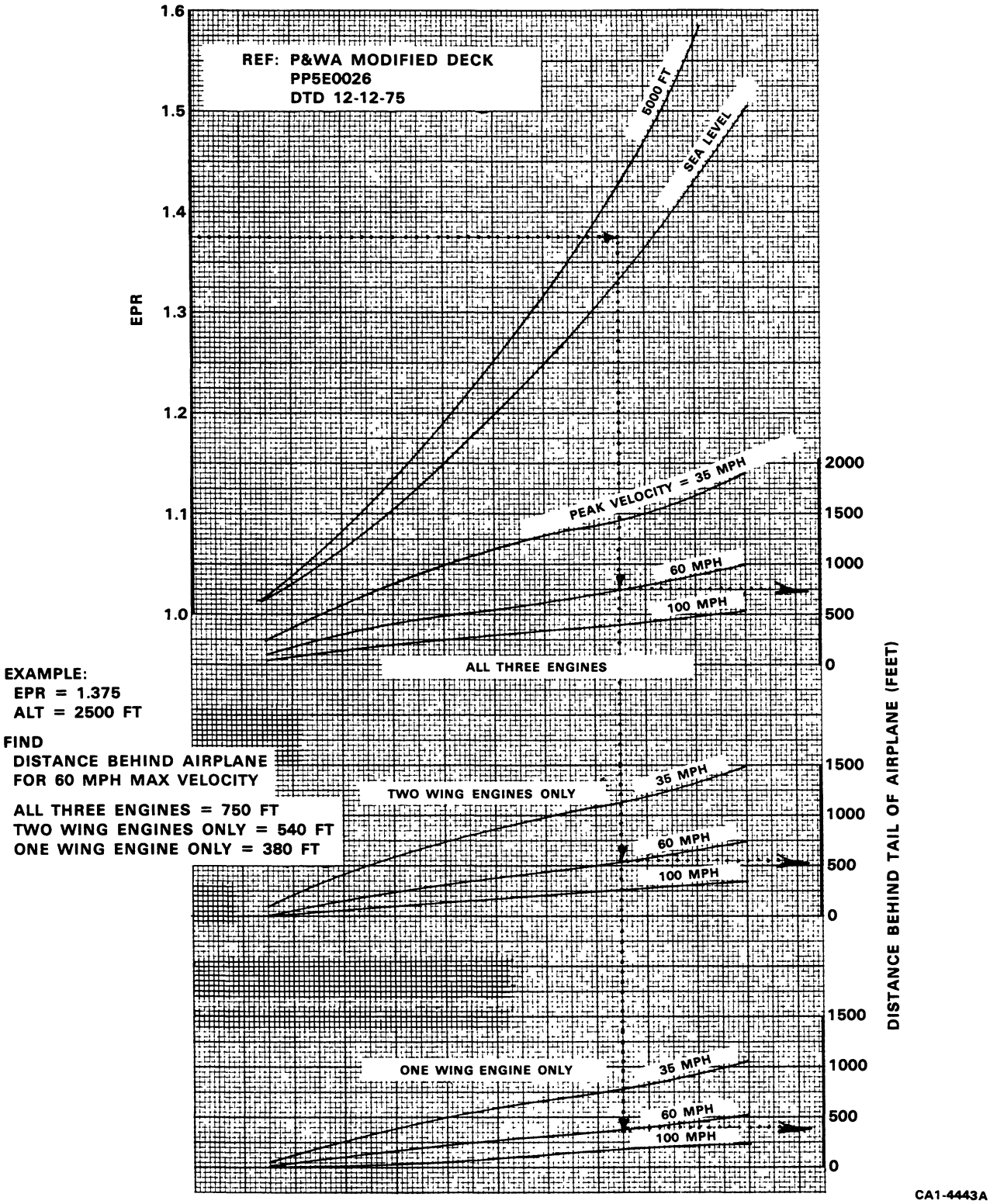

POWERPLANT - Controls and Indicators

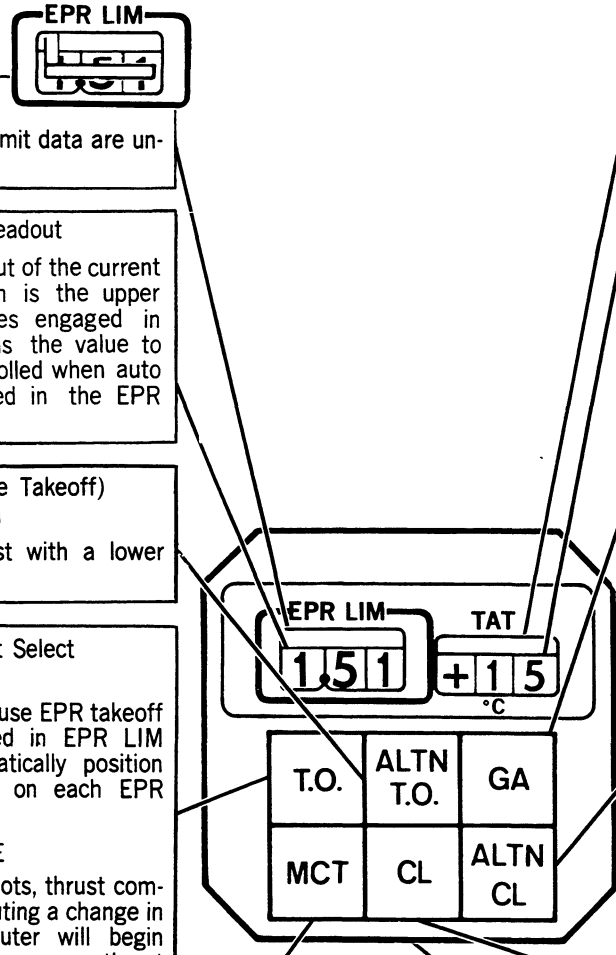

EPR LIM Flag

Appears when EPR limit data are unusable.

EPR LIM (Limit) Readout

Displays digital readout of the current EPR limitation which is the upper limit for autothrottles engaged in SPEED mode, and is the value to which thrust is controlled when auto throttles are engaged in the EPR mode.

ALTN T.O. (Alternate Takeoff) Thrust Select Switch

Same as T.O. Thrust with a lower EPR takeoff limit.

T.O. (Takeoff) Thrust Select Switch

When pushed, will cause EPR takeoff limit to be displayed in EPR LIM readout and automatically position EPR command bug on each EPR gage.

NOTE

After reaching 30 knots, thrust computer will stop computing a change in EPR setting. Computer will begin computing again when a new thrust mode is selected.

MCT (Max Continuous) Thrust Select Switch

When pushed, will cause EPR max continuous thrust to be displayed in EPR LIM readout and automatically position EPR command bug on each EPR gage.

NOTE

When a thrust select switch is pushed, an integral light in the switch comes on indicating which selection has been made and is being computed by the thrust computer. Light will not come on or may be delayed if for some reason computer cannot accept commanded mode.

TAT Flag

Appears when total air temperature data are unusable.

TAT Readout

Displays total air temperature (ambient plus compressibility rise).

GA (Go Around) Thrust Select Switch

When pushed, will cause EPR go around limit to be displayed in EPR LIM readout and automatically position EPR command bug on each EPR gage. This limit can also be remotely selected in flight by pressing TO/GA button on center throttle. When on the ground, pressing TO/GA button has no effect on selection of EPR limit.

ALTN CL (Alternate Climb) Thrust Select Switch

When pushed, will cause EPR alternate climb thrust (reduced climb) to be displayed in EPR LIM readout and automatically position EPR command bug on each EPR gage.

CL (Max Climb) Thrust Select Switch

When pushed, will cause EPR max climb thrust to be displayed in EPR LIM readout and automatically position EPR command bug on each EPR gage.

THRUST COMPUTER INDICATOR

Receives temperature from the air data computer which, in turn, has received this data from the TAT sensor. The indicator will display TAT plus computed EPR limit which is based on flight mode, TAT, pressure altitude, and bleed air conditions.

CENTER INSTRUMENT PANEL

CA1-4122 C

Printed in U.S.A.

POWERPLANT - Controls and Indicators

N_2 Gage (3)

Indicates % rpm of high pressure compressor on dial scale and N_2 digital readout. N_2 max pointer remains at highest overlimit value N_2 pointer has indicated since N_2 max pointer was previously reset.

Warning Flag

Loss of input power or failure of N_2 equipment will cause a warning flag to cover digital readout.

EPR (Engine Pressure Ratio) Gage (3)

Indicates ratio of low pressure turbine discharge pressure to engine inlet pressure on dial scale and EPR digital readout. EPR command bug can be manually set to any desired reference EPR by pulling out CMD knob and rotating it. When CMD knob is pushed in to normal auto mode, EPR command bug is automatically programed by thrust rating computer.

ENG IND MAX POINTER RESET Button

Push to reset maximum indication pointers for N_1, N_2 and EGT gages, to maximum limit mark.

(FLIGHT ENGINEER'S LOWER PANEL)

ENG IND MAX POINTER RESET

EPR Command Readout

When CMD knob is pushed in to normal auto mode, a mask covers digital readout. Mask is removed when CMD knob is pulled out for manual operation and EPR limit selected is provided to autothrottle system for speed mode of operation.

Warning Flag

Loss of input power or failure of EPR equipment will cause a warning flag to cover digital readout.

EGT (Exhaust Gas Temperature) Gage (3)

Indicates temperature of exhaust gases down stream of low pressure turbine on dial scale and EGT digital readout. An amber light on lower right corner of each EGT gage comes on to advise of impending overtemperature condition when EGT rises into caution range. Light will go off when EGT decreases below caution range. EGT max pointer remains at highest overlimit value EGT pointer has indicated since EGT max pointer was previously reset.

N_1 Gage (3)

Indicates % rpm of low pressure compressor on dial scale and N_1 digital readout. N_1 max pointer remains at highest overlimit value N_1 pointer has indicated since N_1 max pointer was previously reset.

Warning Flag

Loss of input power or failure of EGT equipment will cause a warning flag to cover digital readout.

Warning Flag

Loss of input power or failure of N_1 equipment will cause a warning flag to cover digital readout.

FUEL FLOW Gage (3)

Indicates fuel flow rate on dial scale and digital readout. With power loss pointer goes to zero and digital readout remains at last position.

CENTER INSTRUMENT PANEL

CA1-4123 F

POWERPLANT - Controls and Indicators

ICING Light (3)
Senses fuel pressure differential and indicates an impending fuel filter clog ging Continued operation with this light on may allow a bypass valve to open which will then permit any con taminants to pass further into the fuel control system No indication of this bypassing is provided

FUEL HEAT ON Light (3)
Indicates when respective fuel heat shutoff valve is open

FUEL HEAT Switch (1 2 3)
Momentary ON position activates a timer that opens the respective fuel heat shutoff valve

FUEL TEMP Switch
Selects indication at FUEL TEMP indi cator of the fuel temperature at either of the three engines or at number three fuel tank

FUEL TEMP Indicator
Indicates in degrees centigrade the fuel temperature at the location selected by the FUEL TEMP switch

FUEL USED RESET Button
Pushed to reset fuel used indications Button must be held in until all counter drums on the fuel used indicators have returned to zero and come to a com plete stop

FUEL USED Indicator (3)
Indicates total fuel consumed by the associated engine since the last time it was reset to zero No 2 fuel used indicator does not indicate APU fuel used

FUEL PRESS Gage (3)
With engines operating indicates the sum of fuel tank pumps and engine driven boost pump pressure

NOTE
Will indicate tank pumps pressure when the associated engine is not run ning (approximately 20 psi)

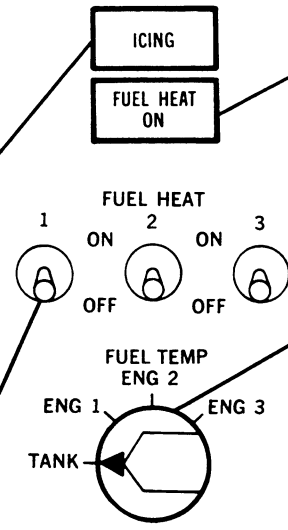

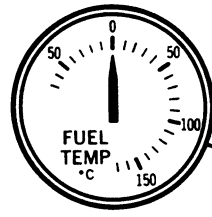

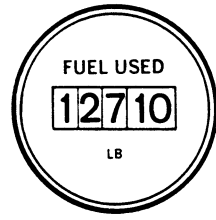

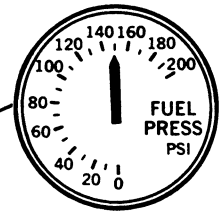

FLIGHT ENGINEER S
LOWER PANEL

CA1-4172

POWERPLANT - Controls and Indicators

ENG OIL PRESS LO Light (1, 2, 3)
Light comes on when the pressure in the engine system is below the minimum range for operation

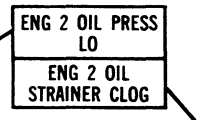

(OVERHEAD PANEL)

ENG OIL STRAINER CLOG Light (1, 2, 3)
When the light comes on it indicates an impending clogging of the engine oil strainer. Continued operation with the light on may allow a bypass valve to open which will then permit any contaminants to re-enter the engine oil system. No indication of this bypassing is provided

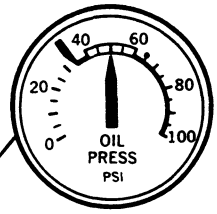

OIL PRESS Gage (3)
Indicates engine oil pressure in psi, normal operating range, caution range, and limit

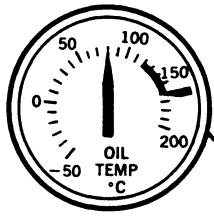

OIL TEMP Gage (3)
Indicates caution range, limit, and temperature of engine oil in degrees centigrade after oil passes through the oil pump and fuel/oil cooler

OIL QTY Gage (3)
Indicates the quantity of oil in engine oil tank A movable index on the periphery of the instrument is used as a reference marker

ENG VIB IN/SEC Scale (1, 2, 3)
Will indicate engine vibration in, in/sec Indicator will display engine vibration of the low speed rotor or high speed rotor selectively

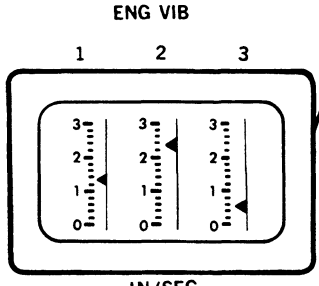

ENG VIB TEST Button
When pressed, the engine vibration scale indicators will move from their respective positions to the predetermined setting of 2 0 in /sec When released, they should return to their original positions

FILTER Switch

- HI — Selects high frequency vibrations caused by high speed rotor unbalance for display on the vibration indicator.
- BOTH — Selects high and low frequency vibrations caused by both high speed and low speed rotor unbalance for display on the vibration indicator.
- LO — Selects low frequency vibrations caused by low speed rotor unbalance for display on the vibration indicator.

ENG VIB PICKUP Switch
Selects either forward or aft vibration pickups on all three engines for display on the vibration scales

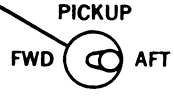

FLIGHT ENGINEER'S LOWER PANEL

CA1-4124A

POWERPLANT – Controls and Indicators

ENG FAIL Light (2)

Comes on to indicate engine power loss when any engine's N_1 rpm differs by 11% rpm or more with either of other engine's N_1 rpm. Ground sensing relay will disable engine failure detector system in flight. Engine failure detector logic will prevent ENG FAIL light from coming on during reverse thrust operation. Engine failure detector system will automatically arm when any engine N_1 fan speed is 85% rpm or higher. Light does not cause MASTER WARNING or MASTER CAUTION lights to come on.

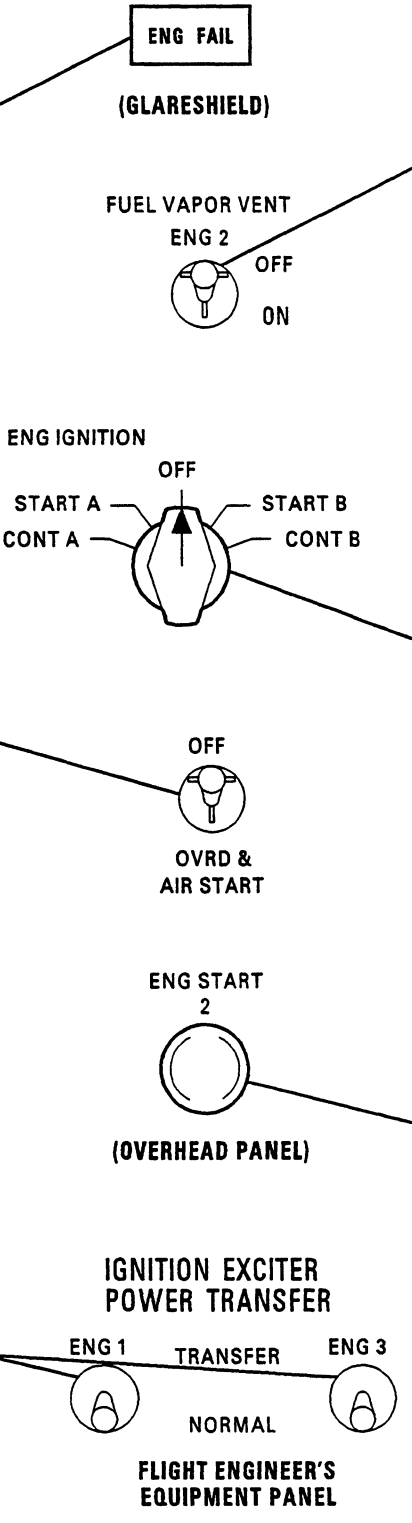

ENG FUEL VAPOR VENT Switch (1, 2, 3)

NOTE

The system is deactivated.

ENG IGNITION Selector

OFF – Deenergizes engine ignition and prevents normal starter valve operation.

START A or B – Arms engine start switches and provides ignition when engine start switch is pushed and fuel lever is positioned to ENRICH START or ON.

CONT A or B – Provides continuous ignition after starter cutout has disengaged starter, provided fuel lever is at ENRICH START or ON.

When Start A or B is selected, with APU control switch in NORM, APU N_1 rpm will automatically increase to provide greater pneumatic capability for engine starting.

OVRD & AIR START Switch

OVRD & AIR START – Bypasses engine ignition switch, fuel lever switch and provides dual ignition to all three engines simultaneously. Also arms engine start switches.

IGNITION EXCITER POWER TRANSFER Switch (1, 3)

NORMAL – Engine ignitors A and B are powered by their normal power sources, i.e., A ignitors are powered by left emergency ac bus and B ignitors are powered by right emergency ac bus.

TRANSFER – Normal ignitor power sources are reversed, i.e., A ignitors are now powered by right emergency ac bus and B ignitors are now powered by left emergency ac bus.

ENG START Switch (1, 2, 3)

When pushed, is magnetically held and opens respective start valve if engine ignition selector is in either START A or B or if override and air start switch is in OVRD & AIR START. Light comes on in engine start switch indicating start valve is open. Starter switch pops out automatically when starter reaches approximately 45% N_2 rpm and light goes off when start valve is closed.

CA1-9389

Ignition exciter power transfer switches effective on airplanes with SB 74-2 incorporated or production equivalent.

POWERPLANT-Controls and Indicators

ENG FIRE Handle (1, 2, 3)

If normal fuel shutoff malfunctions, pulling engine fire handle full down will mechanically shutoff fuel and hydraulic supply to associated engine, deenergize associated generator field, turn off fire bell, and locks fuel lever light on if FUEL lever is not at OFF.

NOTE

Twisting engine fire handle while pulling handle may result in premature firing of extinguishing agent.

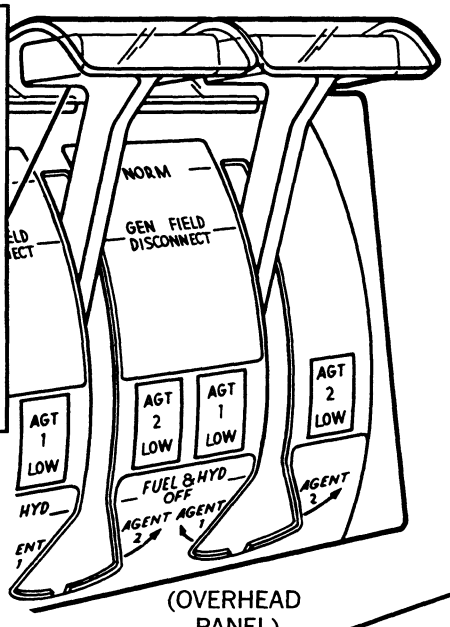

(OVERHEAD PANEL)

Reverser Lever (3)

NOTE

On airplanes with SB78-40 or production equivalent, an in-flight reverse thrust interlock prevents deployment of thrust reversers unless landing gear is down.

Initial reverser lever movements starts reverser deployment. For engines 1 and 3 reverser lever cannot be raised past reverse idle detent until reverser is fully deployed. For engine 2 reverser lever cannot be raised past reverse idle detent until reverser is fully deployed and nose gear ground shift mechanism actuates.

TO/GA Button

For description refer to Automatic Flight Chapter.

ATS Disengage Button (2)

For description refer to Automatic Flight Chapter.

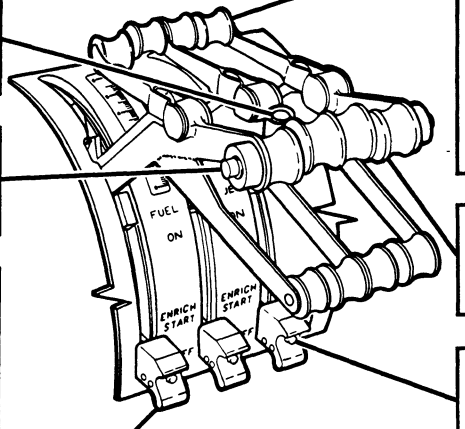

(PEDESTAL)

Throttle (3)

Positions engine fuel control to obtain a desired thrust.

FUEL Lever Lock Release Button (3)

When pushed, unlocks fuel lever in either ON or OFF position.

FUEL Lever (3)

ON – Permits initiation of ignition if engine ignition switch is in START A or B and start switch is pushed, and opens respective fuel valve. Fuel lever will initiate ignition if engine ignition switch is in CONT A or B, and will open respective fuel valve regardless of start switch position.

ENRICH START – Improves engine starting with cold fuel or cold ambient temperatures and permits initiation of ignition same as at ON position.

OFF – Closes fuel shutoff valve at respective engine and deenergizes respective starting or continuous ignition circuit.

REVERSER UNLOCK

REVERSER UNLOCK Light (3)

Comes on to indicate respective reverser is out of stowed position but is not in full reverse thrust position.

REVERSE THRUST

REVERSE THRUST Light (3)

Comes on to indicate respective thrust reverser is in full reverse thrust position and is ready for reverse thrust modulation.

CENTER INSTRUMENT PANEL

CA1-4121 C

Printed in U.S.A.

IGNITION SYSTEM

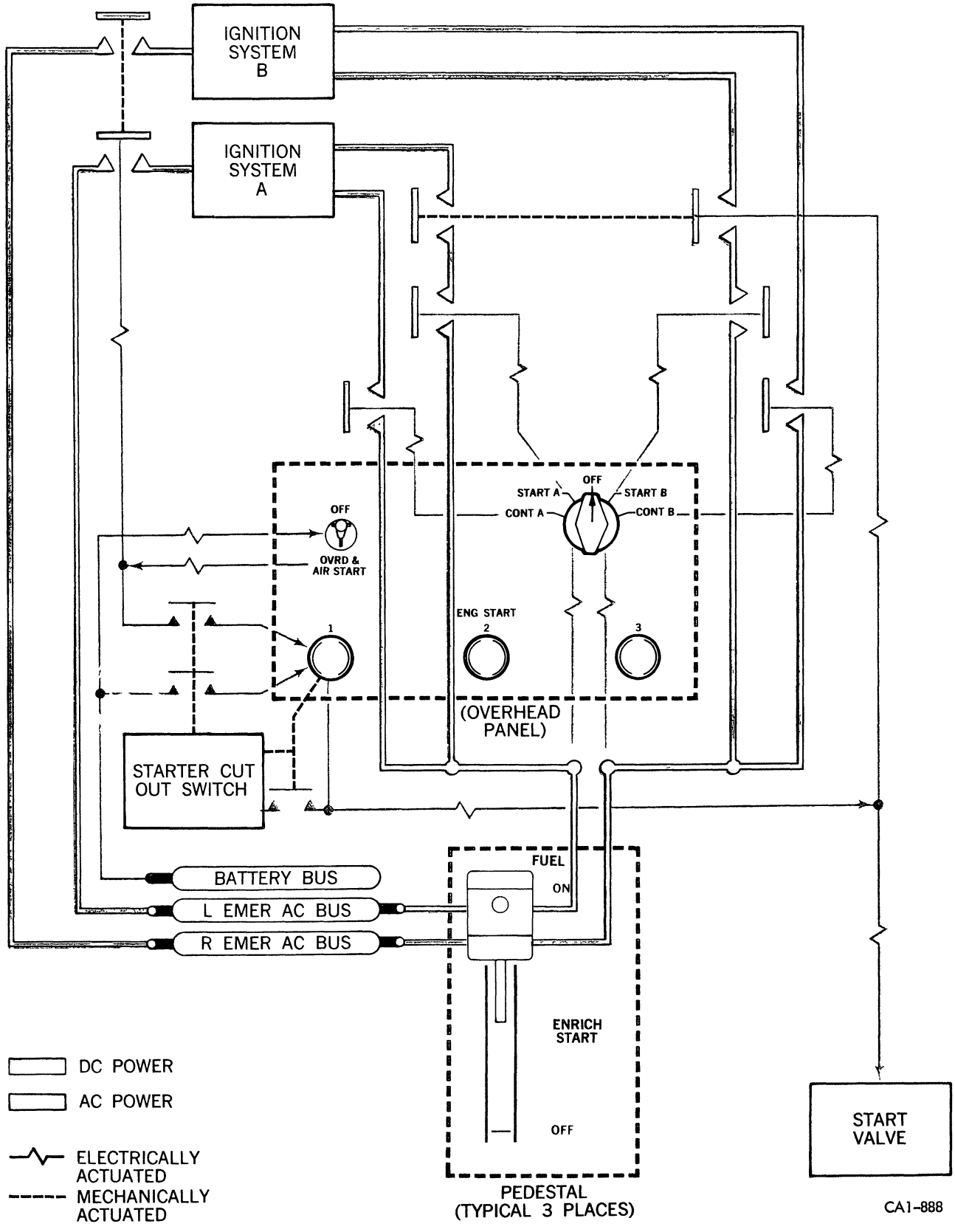

Effective for airplanes - without - ignition exciter power transfer switches installed.

IGNITION SYSTEM

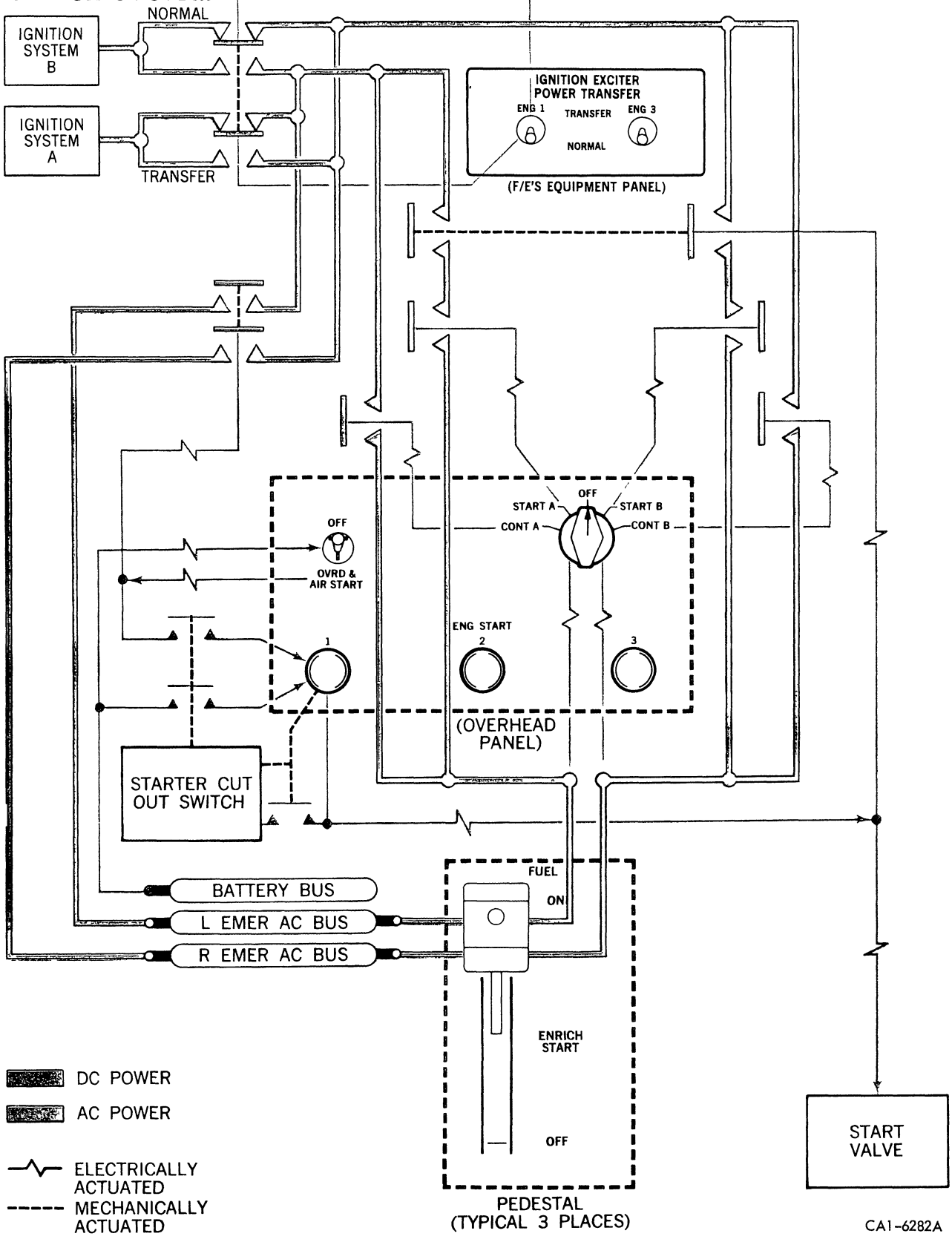

ENGINE OIL SYSTEM

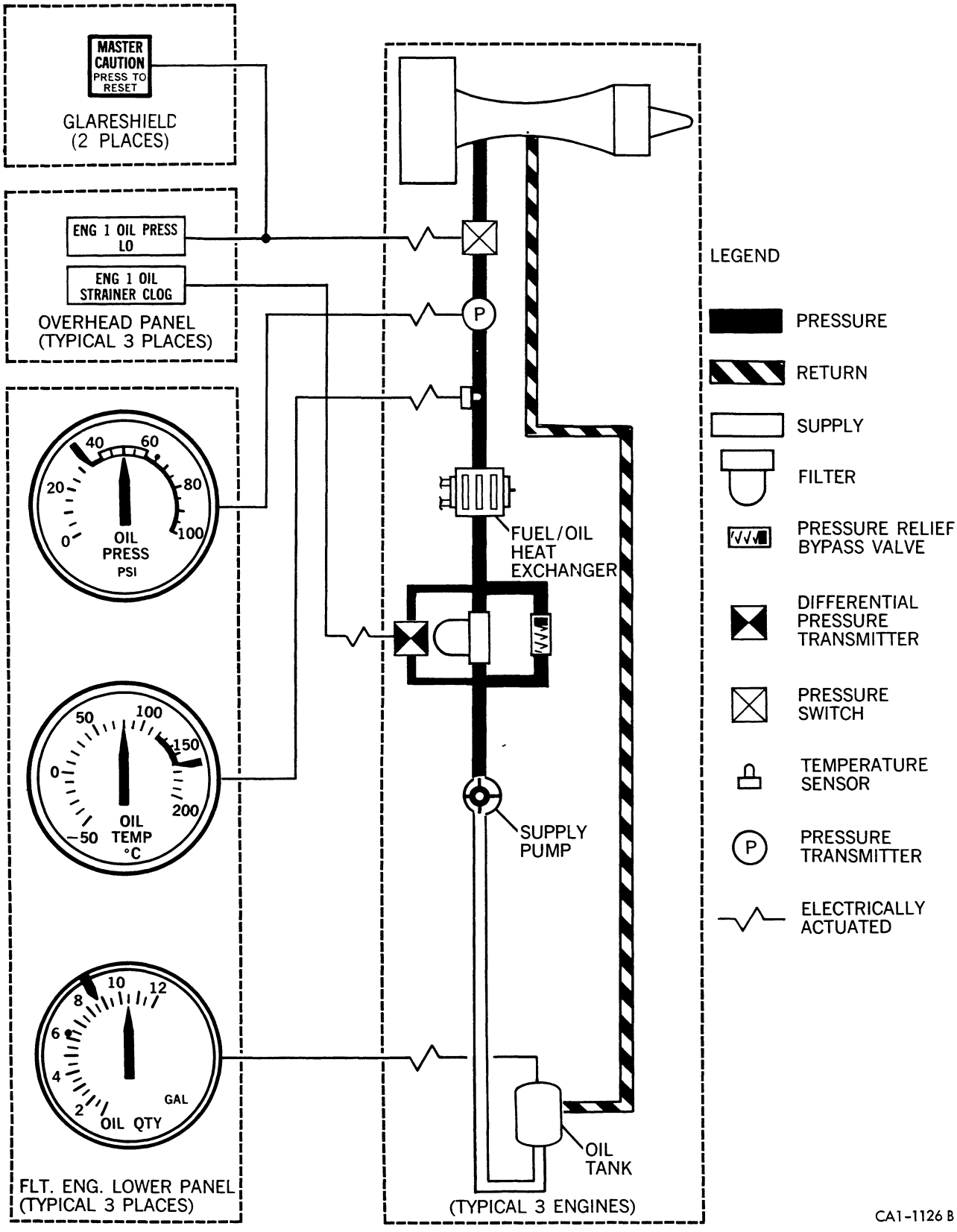

ENGINE FUEL/HEAT CONTROL SYSTEM

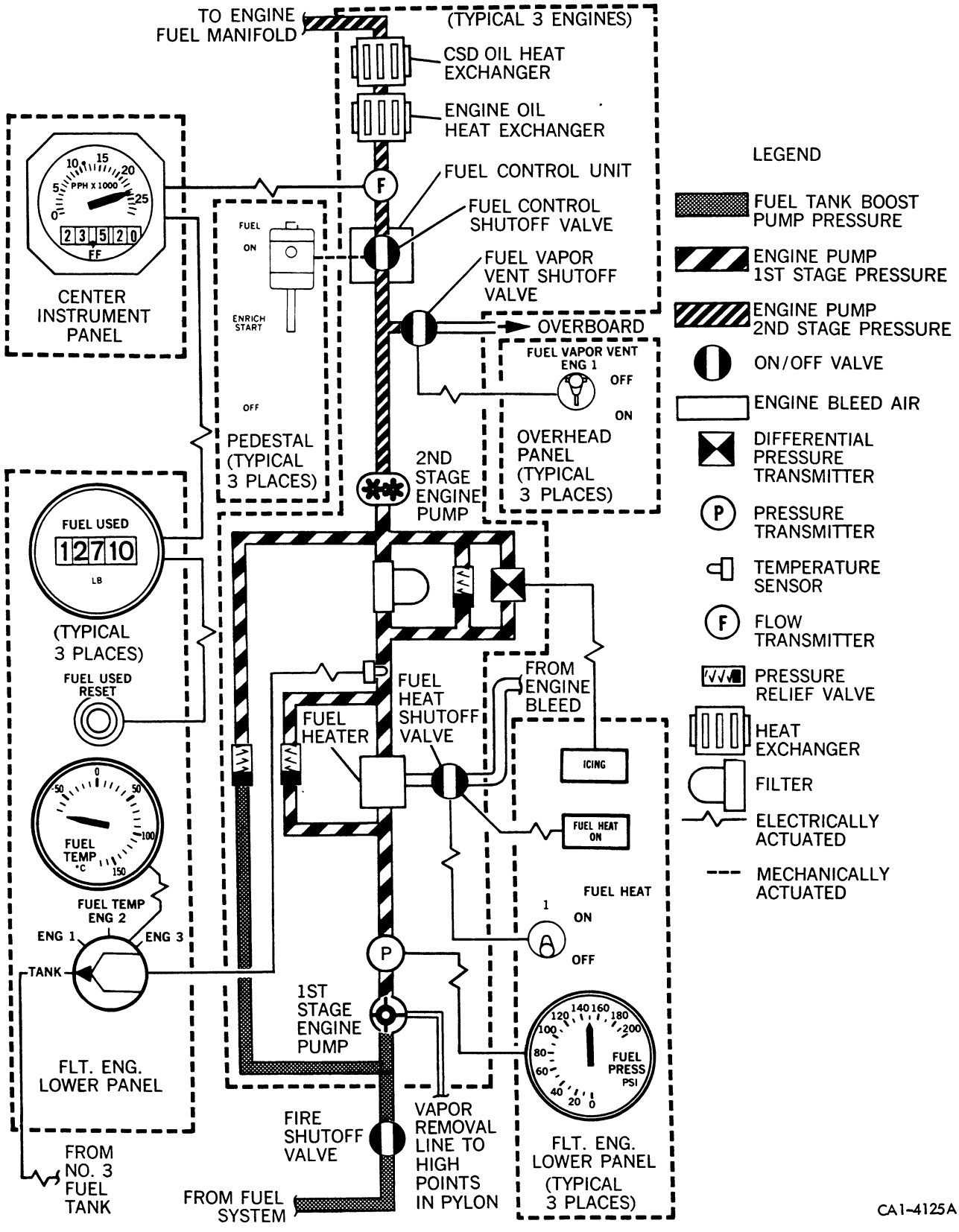

Printed in U.S.A.