CHAPTER 6
ELECTRICAL SYSTEMS

Printed in U.S.A.

ELECTRICAL SYSTEMS

GENERAL

The ac and dc electrical systems are normally powered by three engine-driven generators. They may also be powered by an auxiliary power unit (APU)-driven generator or through two external power receptacles (main and galley). The main external power receptacle provides both ac and dc power. The galley external power receptacle provides only ac power and to obtain full galley power, APU generator power, engine generator power or main external power must be on. Portions of the systems may be powered by a battery and other portions by an air-driven generator (ADG). Distribution and control is effected through control panels, annunciators, indicators, switches, buses, and circuit breakers.

NOTE: If a circuit breaker trips, a cooling period of about 90 seconds should be allowed before resetting. A tripped circuit breaker should never be reset more than once.

Operational simplicity and reliability are provided by protective circuitry with automatic corrective action included. The electrical generating system is ac, with necessary dc power provided by transformer/rectifier units or the battery.

DESCRIPTION

AC ELECTRICAL SYSTEM

AC Generating System

During ground operations, 3 phase, 115/200 VAC, 400 Hz power is supplied by two external power sources, the APU-driven generator, or by one or more of the three engine-driven generators. In flight, normal power is furnished by the three engine-driven generators. The generators will function either paralleled, unparalleled, or isolated. Frequency control of each engine-driven generator is provided by an associated engine-driven constant speed drive (CSD) unit. CSD disconnect can be accomplished at any time (not recommended when engine is below idle rpm), but reengagement is possible only on the ground after the engine has come to a complete stop. Each generator is capable of supplying sufficient power for operation of all essential electrical systems.

The APU-driven generator provides electrical power for ground operations and also serves as a supplemental power source when required in certain flight phases. The APU-driven generator is identical to the three engine-driven generators. The APU generator does not have a CSD. The APU is governed to drive the generator at the correct speed. The APU generator cannot be paralleled with any engine generator or the main external power source.

A battery/static inverter combination can provide approximately 30 minutes of left emergency ac and dc bus power for the Captain's flight instruments and essential communication and navigation equipment when normal sources are inoperative. Emergency ac power for an auxiliary hydraulic pump or the Copilot's instruments on the right emergency ac and dc buses can be supplied by deploying the ADG and selecting the desired mode of the ADG control switch.

AC Distribution System

Three independent ac channels provide power to associated generator

buses and main ac buses. Paralleling of the channels is accomplished through the ac tie bus. This design permits assumption of electrical loads by any functioning generator(s).

A fourth, independent ac channel permits distribution of APU generator power to the generator and main buses for ground or inflight operations. The two emergency ac buses can be energized by powering generator buses 1 and 3 from any of the engine-driven generators, the APU-driven generator or the main external power source. An emergency ac source is available to the left emergency ac bus through the battery/inverter combination. The ADG may be used to power the right emergency ac bus.

The generator buses and the ac ground service bus supply most of the centrally located and/or high-current loads (hydraulic pumps, most fuel pumps, ac buses and galley power). Power for lower current, non-centrally located loads and essential loads is supplied through the three main ac buses, cabin ac buses, remote ground service buses, and the two ac emergency buses. Radio and instrument buses supply their respective component loads.

The ac ground service bus also provides power to those components essential to ground servicing operations. Energizing the total normal distribution system, when the total system is not required, is thus avoided. However, power originating at the main external power receptacle, the APU-driven generator, or one or more of the three engine-driven generators can be directed to each of the main ac buses, if required by operational needs.

Protective circuitry is provided to automatically isolate faults. Additionally when no other source is available and just one engine-driven generator is operating, all buses are automatically connected to that source.

DC ELECTRICAL SYSTEM

DC Generating System

Four transformer/rectifiers (T/R's) are the primary source of dc power. The battery and/or the ADG (through T/R 3) may be used as emergency dc power sources.

A battery charger keeps the battery fully charged when the ac ground service bus is powered, the battery bus is powered by a T/R, and the battery switch is in BAT. Sensors in the battery provide protection and control for the charger.

DC Distribution System

Similar to the ac system, three counterpart dc channels, originating in T/R's 1, 2A, and 3, (powered by the APU generator, the main external power source, or an engine generator via generator buses 1, 2, and the right emergency ac bus), energize their associated dc buses. A fourth channel, normally originating in T/R 2B (powered from the ac ground service bus by either the APU, the main external power source, or ac generator bus 2) energizes the dc ground service bus. On airplanes with SB 24-90 incorporated or production equivalent, T/R 2A can be manually selected as an alternate power source for the dc ground service bus. Normally, the battery bus is powered from T/R's 2A and 2B. Emergency dc power is available to the right emergency dc bus from the

Printed in U.S.A.

ADG through T/R 3. Emergency dc power is available to the left emergency dc bus and the battery bus from the battery. Unlike the ac system, the dc buses are electrically isolated. Two or more dc buses can be operated in parallel, if required, via the dc tie bus by closing the appropriate dc tie switches. The battery direct bus is powered at all times, regardless of the battery switch position..

CONTROLS AND INDICATORS

Controls and indictors required to operate and monitor the electrical systems are on the Flight Engineer's Upper Panel No. 1 and on the Pilot's Overhead Panel and Glareshield. Illustrations of thse major panels are in Chapter 1. Individual controls, circuit breakers, and indicators are illustrated and described in another section of this chapter.

CIRCUIT BREAKER PANEL LOCATIONS Flight Compartment

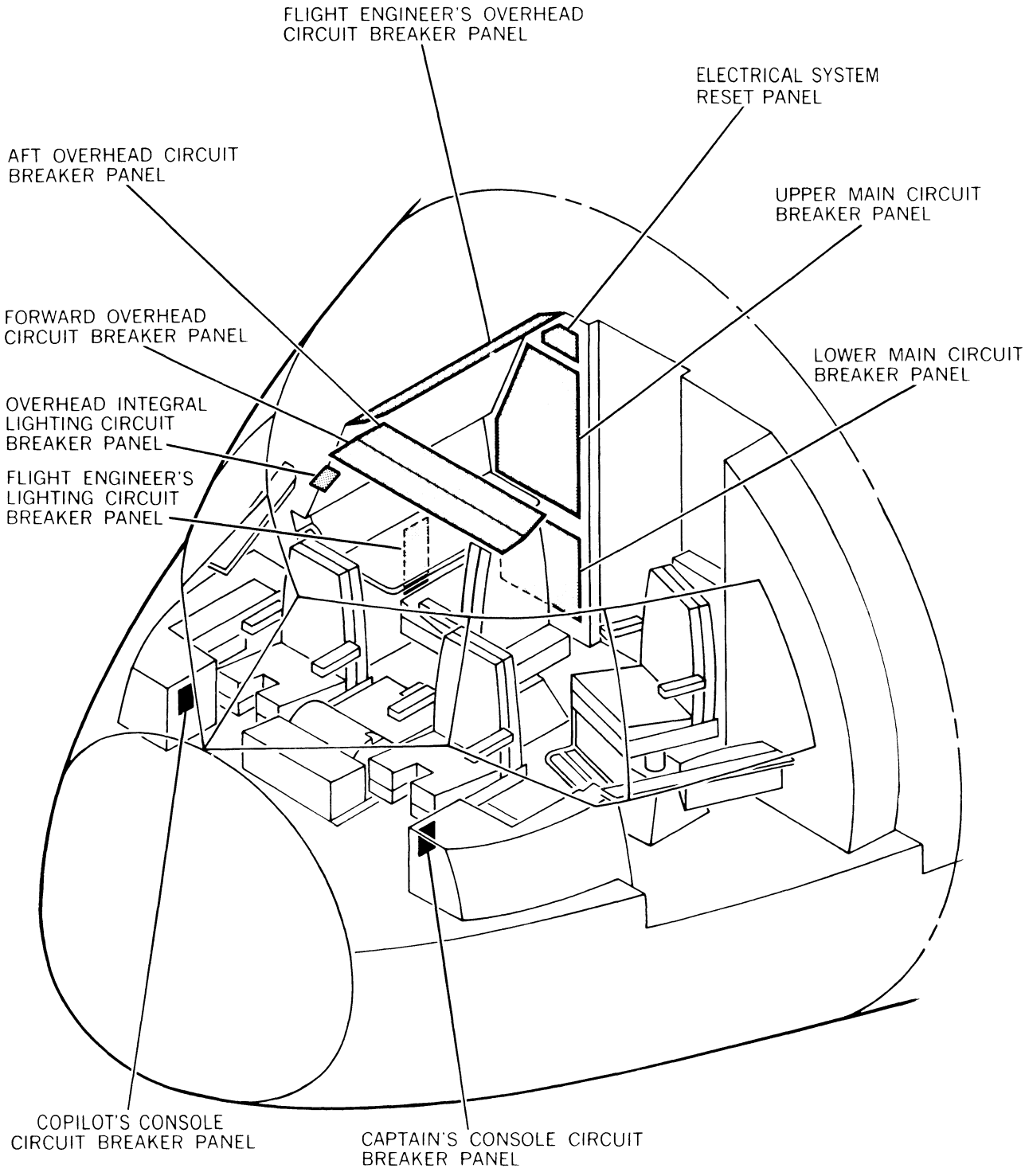

CA1-4458

Printed in U.S.A.

UPPER MAIN CIRCUIT BREAKER PANEL (Sheet 1)

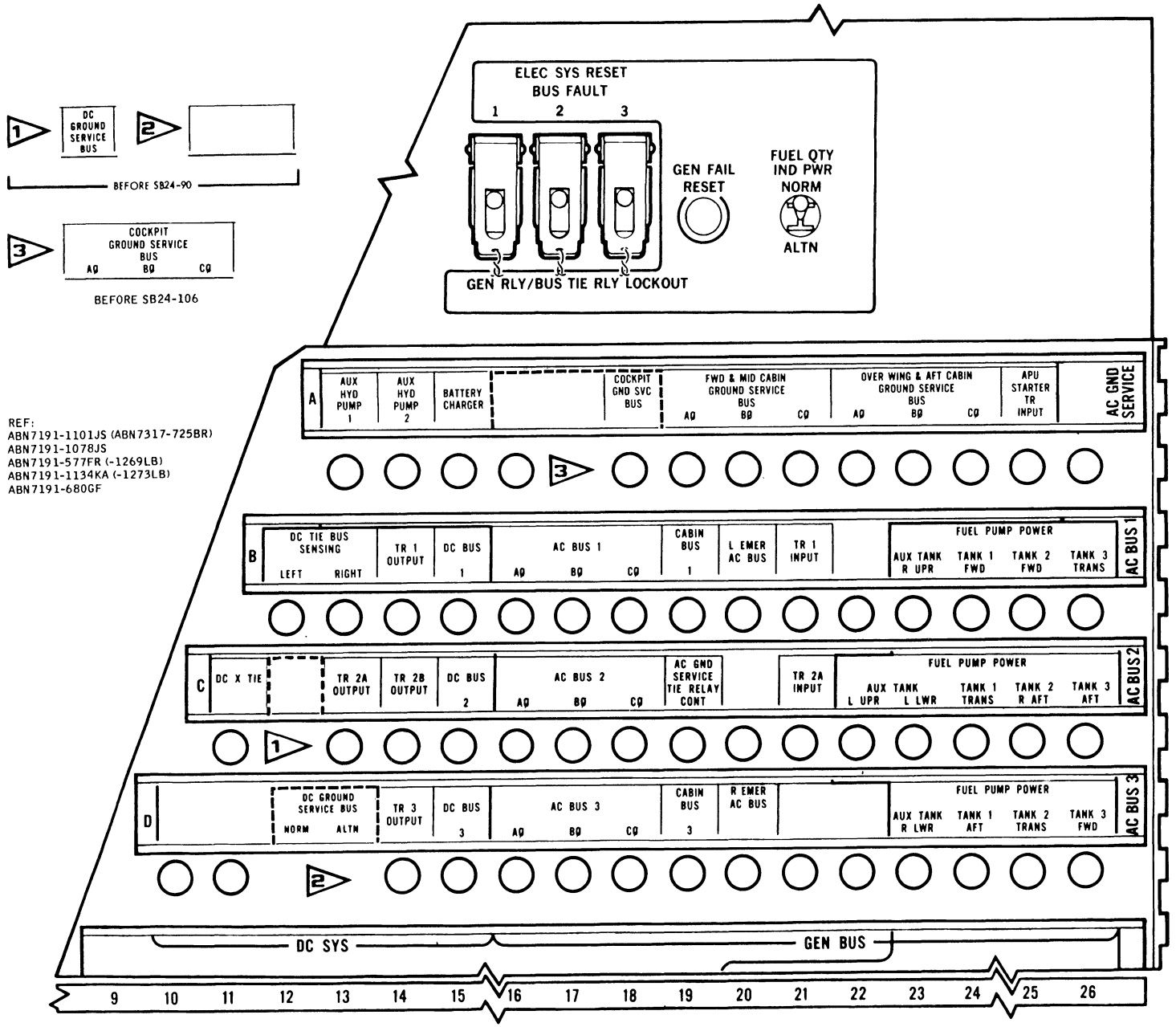

REF:
ABN7191-1101JS (ABN7317-725BR)
ABN7191-1078JS
ABN7191-577FR (-1269LB)
ABN7191-1134KA (-1273LB)
ABN7191-680GF

CA1-4064C

FORWARD AND AFT OVERHEAD CIRCUIT BREAKER PANEL

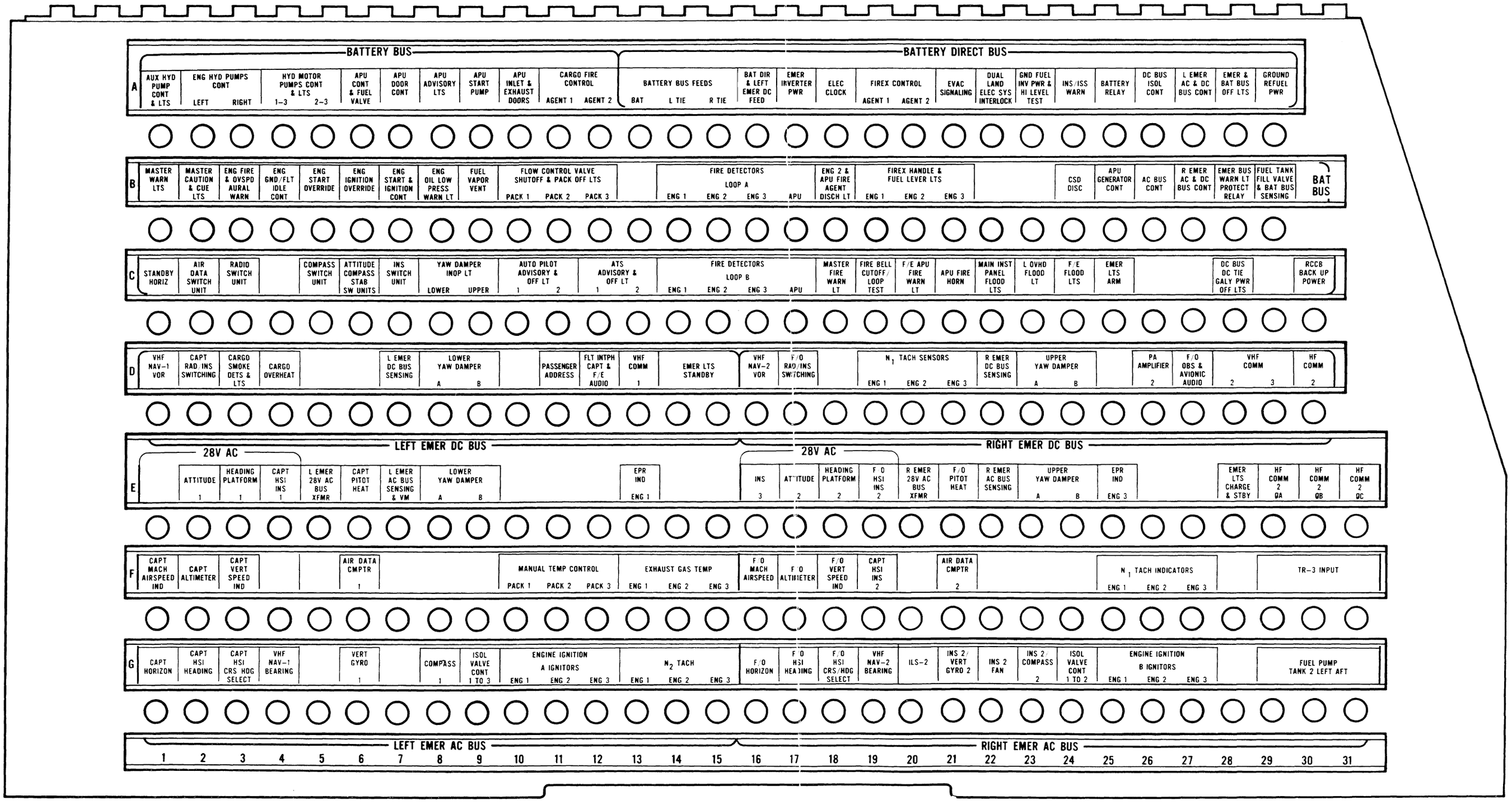

REF: ABN7191-1220KP
ABN7191-1225KP
ABN7191-1079JS
ABN7191-1102JU
ABN7191-1081JS
ABN7191-1080JS
ABN7191-950HG
ABN7191-507H

CA1-4044 B

FLIGHT ENGINEER'S OVERHEAD CIRCUIT BREAKER PANEL

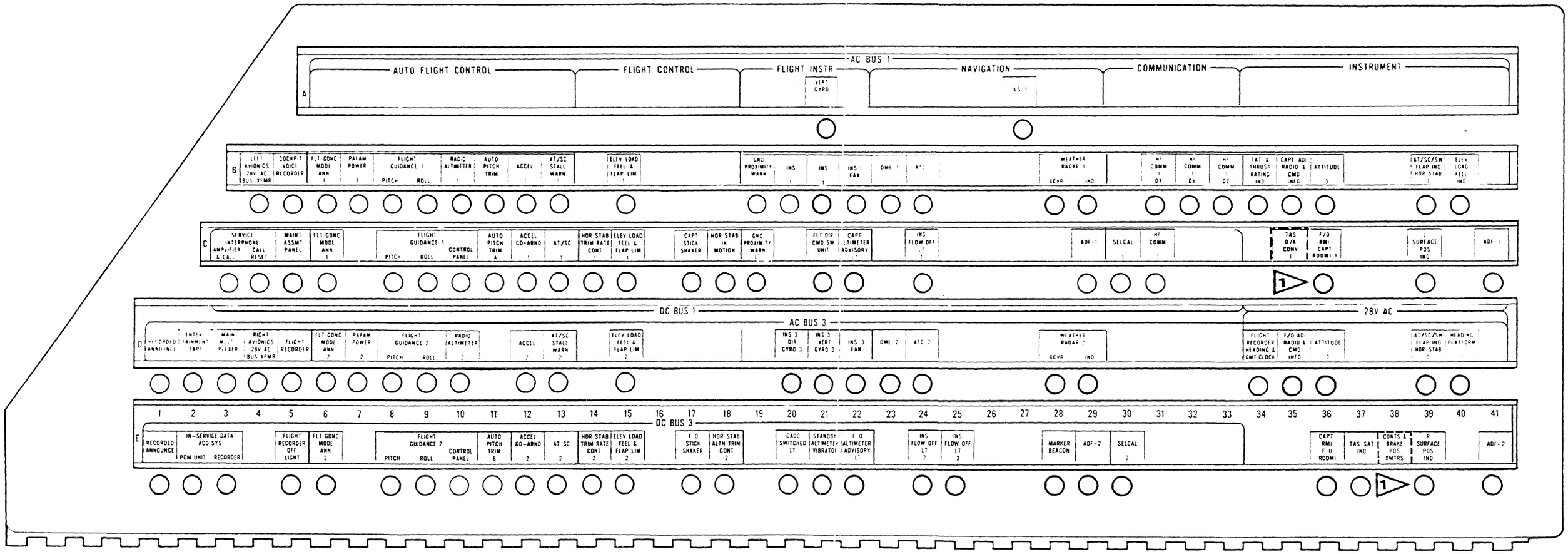

REF:
ABN7191–605CD
ABN7191–1234KR
ABN7191–1178KF/–1254
ABN7191–1250KR
ABN7191–1197KF (ABN7317–619AE)

EFFECTIVE ON SOME AIRPLANES

CA1-5715B

UPPER MAIN CIRCUIT BREAKER PANEL (Sheet 2)

REF:
NBN6212FD
ABN7191-680GF
ABN7191-1082JU
ABN7191-581CJ
ABN7191-1083JU
ABN7191-1084JU (-1263KY)
ABN7191-1085JU

1 BEFORE SB29-109

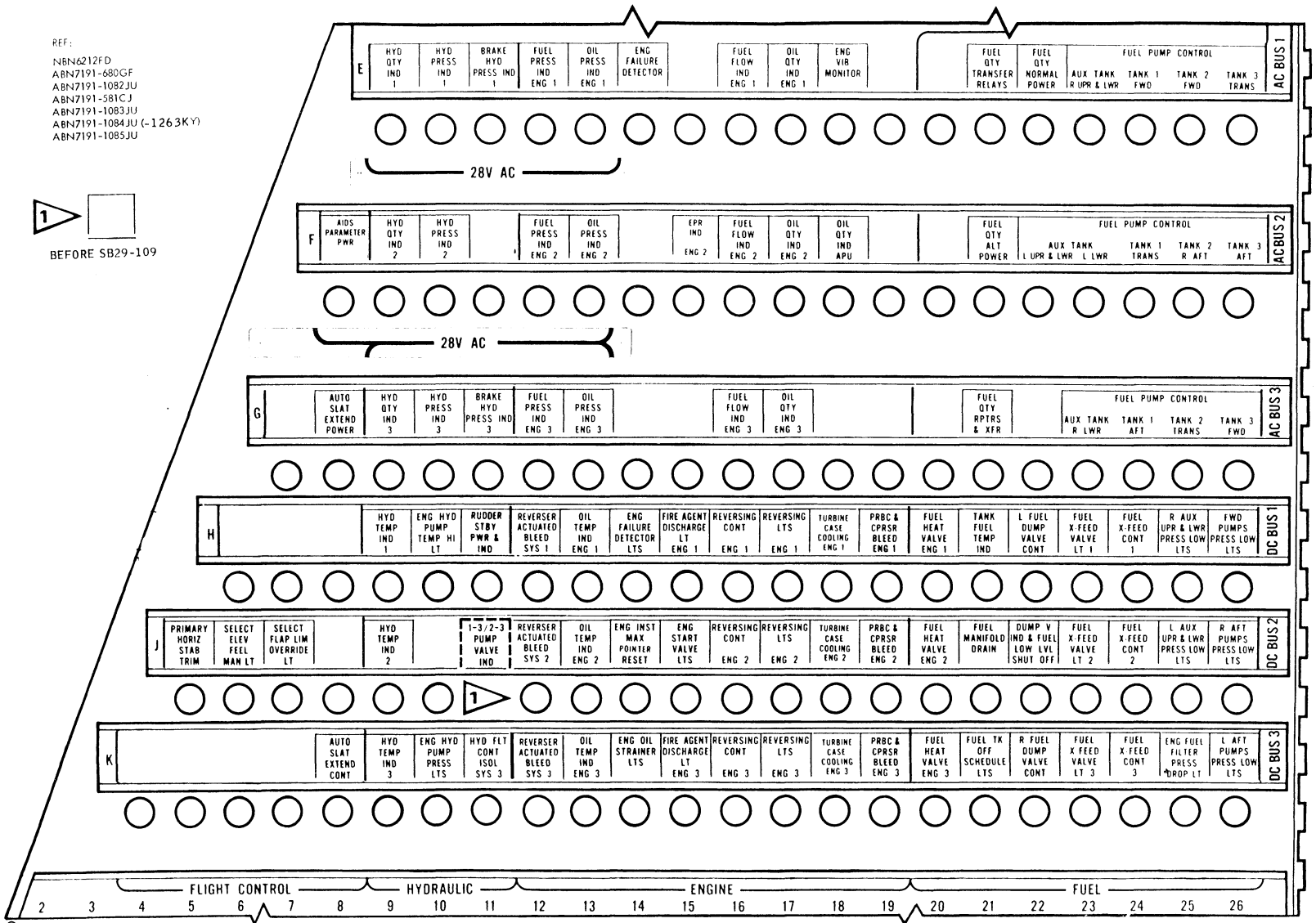

CA1-4065 A

UPPER MAIN CIRCUIT BREAKER PANEL (Sheet 3)

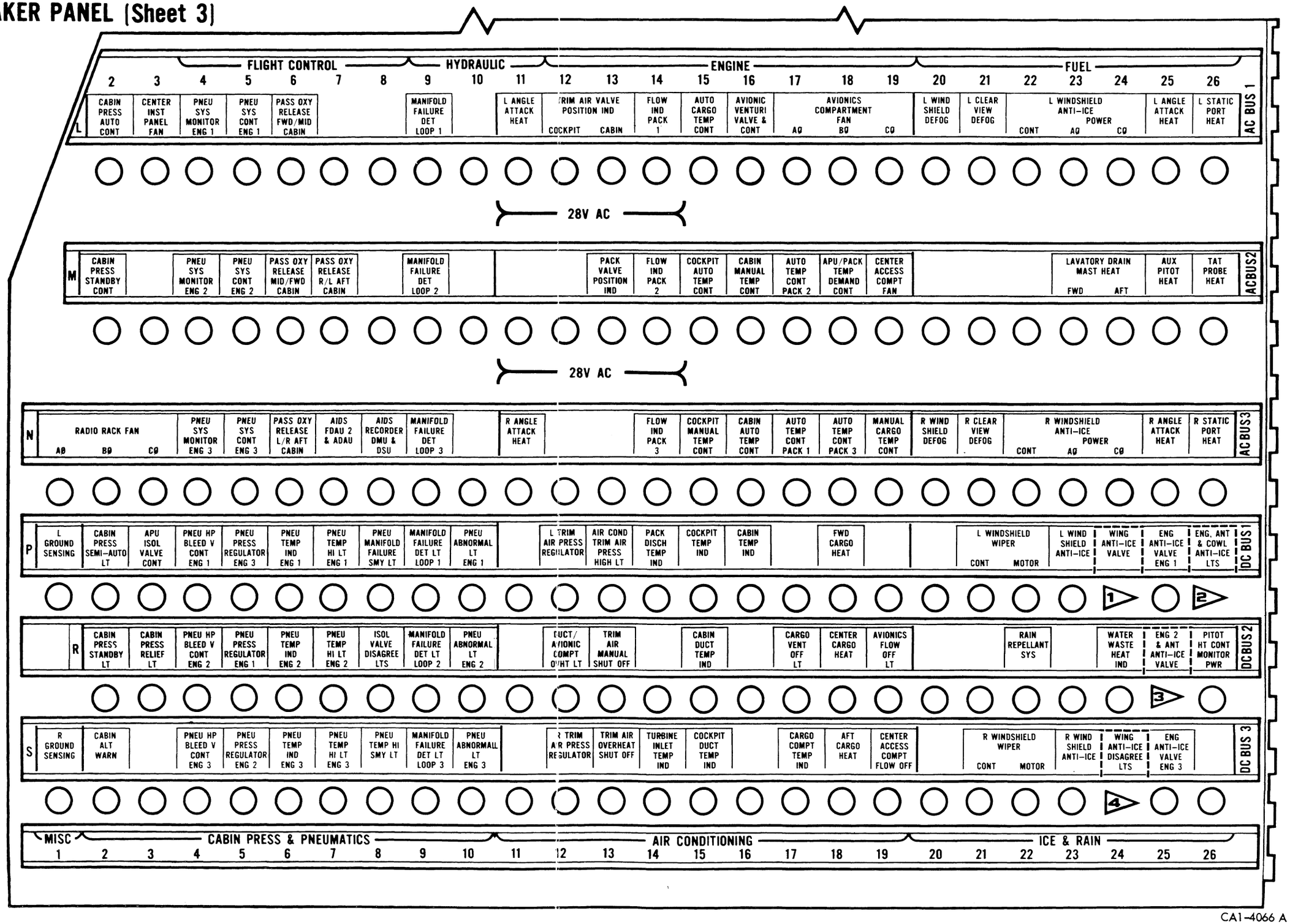

REF: ABN7191-1086KL
ABN7191-1038JJ
ABN7191-1088KL
ABN7191-1087JS (ABN7317-575V)
ABN7191-910GU (ABN7317-581V)
ABN7191-765ED (ABN7317-541J)(-585V)
ABN7191-527H

CA1-4066 A

LOWER MAIN CIRCUIT BREAKER PANEL

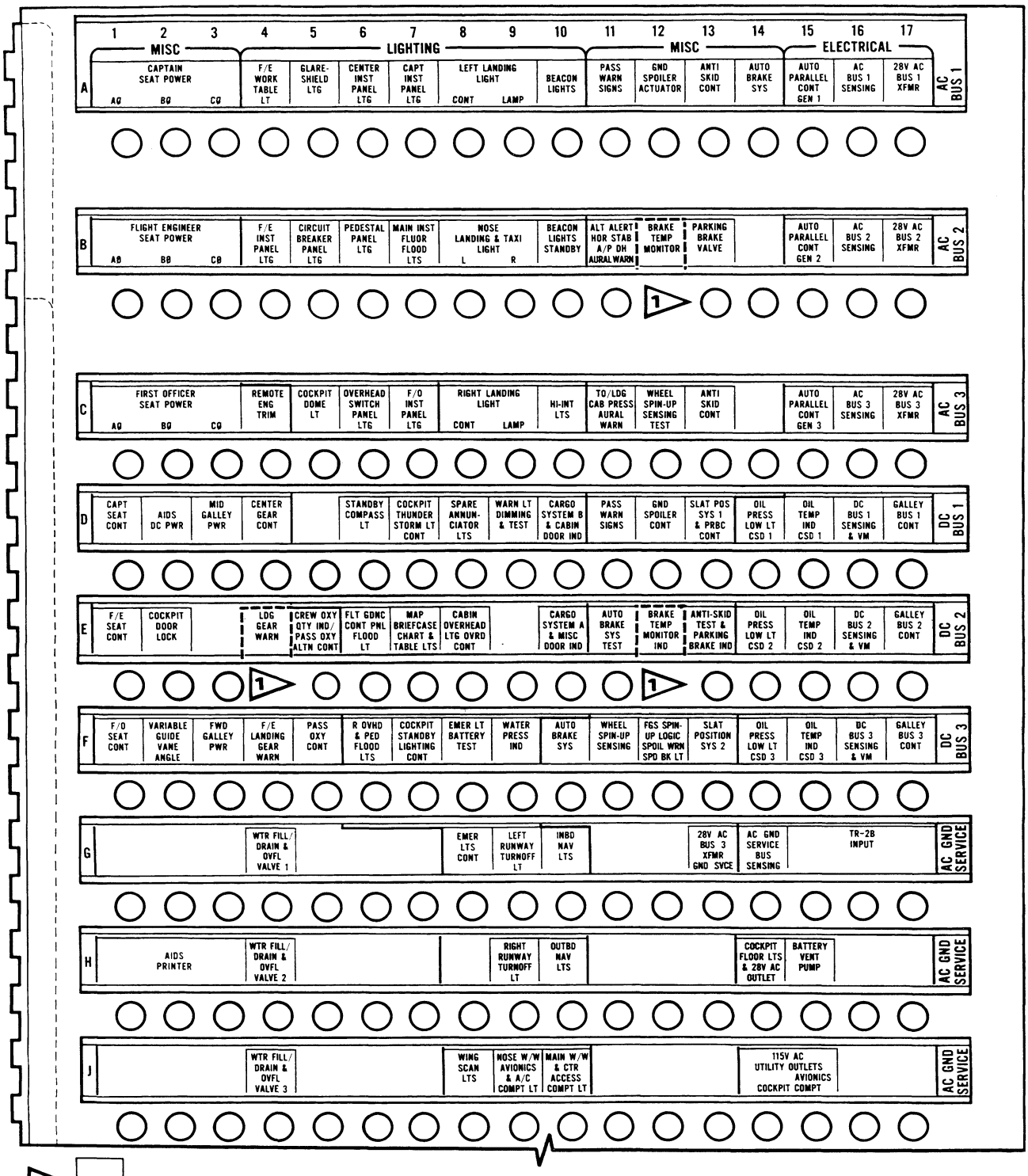

1 EFFECTIVE ON SOME AIRPLANES

REF: ABN7191-1089JS
ABN7191-1090JS (-1096JS)
ABN7191-1091JS
ABN7191-1092JS
ABN7191-1093JS (-1097JS)
ABN7191-1094JS
ABN7317-530G
ABN7317-535G
ABN7317-536G

CA1-4067B

ELECTRICAL SYSTEM - Controls and Indicators

GEN Switch (1, 2, 3)

ON — Arms circuit to close associated generator relay (GR) and connects generator to generator bus.

OFF — Opens associated GR and disconnects generator from generator bus.

RESET — This momentary position will close generator control relay (GCR) if the trip was caused by automatic operation of protection circuits or by operating fire handle. RESET is not used in conjunction with GEN FAIL light.

GEN OFF Light (1, 2, 3)

Comes on when generator is disconnected from generator bus. Indicates generator relay (GR) is open. The ELEC cue light and MASTER CAUTION lights also come on.

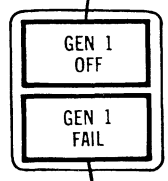

GEN FAIL Light (1, 2, 3)

Comes on to indicate impending or actual generator failure, or spurious signal. To reset, a GEN FAIL RESET button located on Upper Main CB Panel is pushed. If signal was spurious, GEN FAIL light will go off when reset button is pushed.

CSD TEMP Gage (1, 2, 3)

Indicates CSD outlet oil temperature on outer scale. Indicates temperature rise (outlet temperature minus inlet temperature) on inner scale when CSD TEMP PUSH FOR RISE button is pushed.

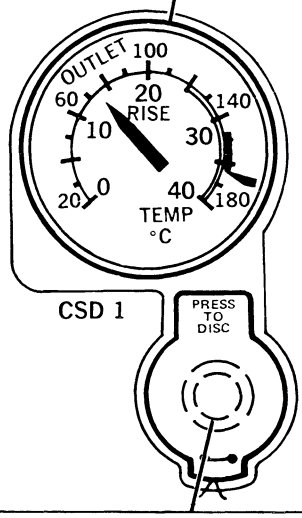

CSD Disconnect button (1, 2, 3)

When pushed, disengages CSD. Disconnect is not recommended when engine is below idle rpm. Once disconnected, CSD cannot be reset in flight or with the engine running on the ground.

CSD OIL PRESS LO Light (1, 2, 3)

Comes on when CSD oil pressure is below allowable operating limit. The ELEC cue and MASTER CAUTION lights also come on.

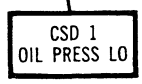

CSD TEMP PUSH FOR RISE Button

When pushed, temperature rise (outlet temperature minus inlet temperature) is displayed on inner scale of CSD temperature gages.

FLIGHT ENGINEER'S UPPER PANEL NO. 1

CA1-121D

ELECTRICAL SYSTEM - Controls and Indicators

AC BUS TIE ISOL Light (1, 2, 3) (Amber)
Comes on when associated bus tie relay is open.

AC BUS TIE ISOL Light (1, 2, 3) (Blue)
Comes on when DUAL LAND mode is operative and the associated bus tie relay is open.

AC BUS OFF Light (1, 2, 3)
Comes on when the associated AC bus is deenergized. The ELEC cue and MASTER CAUTION lights also come on.

AC BUS TIE Switch (1, 2, 3)
NORM — Permits paralleled, unparalleled, or isolated operation under automatic control. Must be in NORM to provide external power to associated bus.
ISOL — Insures isolation of the associated generator bus.

EMER AC BUS OFF Light (L and R)
Comes on when the associated emergency ac bus is deenergized. The EMER BUS OFF summary light (on pilot's overhead panel) and the MASTER WARNING lights also come on.

AC LOAD Meter (3)
Indicates the load on the generator as compared to its rated load. Scale of .5 means generator is operating at 50% of rated load capacity.

FLIGHT ENGINEER'S UPPER PANEL NO. 1

CA1-122D

ELECTRICAL SYSTEM - Controls & Indicators

DC X TIE Switch

OPEN – Switch is normally open to isolate the transformer/rectifiers by opening the dc x-tie RCCB.

CLOSE – Connects a deenergized dc bus to an operative T/R through a selected, energized segment of the dc tie bus.

DC X TIE CLOSED

DC X TIE CLOSED Light

Comes on when the dc x-tie RCCB is closed.

DC TIE Switch (1,3)

OPEN – Switch is normally open to isolate the transformer/rectifiers by opening a dc tie relay.

CLOSE – Connects a deenergized dc bus to an operative T/R through a selected, energized segment of the dc tie bus.

DC TIE 1 CLOSED

DC TIE CLOSED Light (1, 3)

Comes on when the associated dc tie relay is closed.

DC BUS OFF Light (1, 2, 3)

Comes on when the associated dc bus is deenergized. The ELEC cue and MASTER CAUTION lights also come on.

DC BUS 1 OFF

L EMER DC BUS OFF

EMER DC BUS OFF Light (L and R)

Comes on when the associated emergency dc bus is deenergized. The EMER BUS OFF summary light (on pilot's overhead panel) and the MASTER WARNING lights also come on.

DC LOAD Meter (4)

Indicates transformer/rectifier output relative to its rating. Scale reading of .5 indicates unit is operating at 50% of rated output.

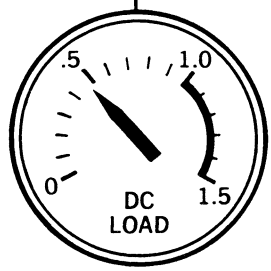

FLIGHT ENGINEER'S UPPER PANEL NO. 1

CA1-123 B

ELECTRICAL SYSTEM - Controls and Indicators

DUAL LAND SELECTED Light
Comes on when DUAL LAND FGCS mode has been selected. Indicates the main electrical distribution system has been commanded to operate in a manner appropriate to this type of automatic landing.

DUAL LAND SELECTED

DUAL LAND PWR ON

DUAL LAND PWR ON Light
Comes on when DUAL LAND mode has been selected and the electrical system configuration meets the requirements for this type of automatic landing.

BAT BUS OFF

BAT BUS OFF Light
Comes on when the battery bus is deenergized and the battery switch is in BAT position. Will come on momentarily when the BAT switch is moved to BAT and T/R output is not on battery bus.

BAT.

OFF

BAT Switch
Switch is shown in the on and locked (BAT) position. To turn OFF, the switch knob must be rotated 90° counterclockwise (the symbolic line will now be vertical), pulled out to unlatch and moved downward to OFF.

BAT — Connects the battery to the battery bus when the battery bus is not powered from a normal source. Connects the battery to the battery charger when the battery bus is powered by a T/R and the ac ground service bus is energized and the EMER PWR switch is OFF.

OFF — Disconnects the battery from the battery bus and the battery charger. External power can still be applied to the main electrical system or the ac ground service bus.

EXT PWR AVAIL

EXT PWR Switch
The magnetically-held EXT PWR position connects external power to the ac tie bus if the external power available light is on.

EXT PWR

OFF

EXT PWR AVAIL Light (3)
Comes on when external power of acceptable quality is connected to the main external power receptacle.

(ONE ON MAIN EXT POWER PANEL)
(ONE ON CABIN GROUND SERVICE PANEL)

EXT PWR IN USE

EXT PWR IN USE Light (2)
F/E light comes on if external power available light is on and the external power switch is in the EXT PWR position. The external power in use light on the cabin ground service panel comes on when the ground service relay (GSR) is closed to the external power by use of the associated switch.

(ONE ON CABIN GROUND SERVICE PANEL)

PARALLEL GENS

PARALLEL GENS Button
When pushed, arms the automatic paralleling system. Subsequently, as individual generators attain the prescribed conditions for paralleling the auto parallel system will close the corresponding BTR and connect the associated generator bus to the ac tie bus.

Any set of conditions which would open a BTR will disarm the automatic paralleling system. As a result, the system must be re-armed if paralleling is desired. Paralleling cannot be accomplished with external power on the ac tie bus, if any ac bus tie isolation switch is in ISOL, if the APU generator is feeding a bus, or if any BTR trip signal is present.

FLIGHT ENGINEER'S UPPER PANEL NO. 1

CA1-124E

ELECTRICAL SYSTEM - Controls and Indicators

DC VOLT/AMP Meter

Displays selected dc bus 1, 2, or 3 voltages. In APU GEN & START position, meter displays APU starter voltage and current. In the BAT & L EMER AC position of the VOLT/AMP/FREQ selector, displays battery voltage and current. Charge readings on the ammeter indicate that the battery is being charged (the battery switch must be in BAT and the emergency power switch must be in OFF). The discharge side displays the load being drawn from the battery. With the emergency power switch in ON, the ammeter needle should indicate within the white discharge band. During APU start, meter displays current (divided by 10) being drawn from the battery or the APU start TR depending upon the position of the APU START SEL switch.

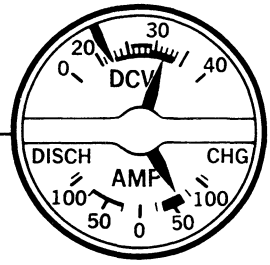

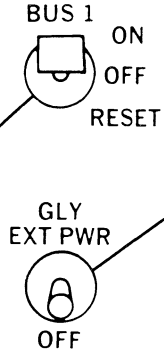

GALLEY BUS Switch (1, 2, 3)

ON — Connects the galley bus to either the associated ac generator bus or to galley external power.

OFF — Disconnects the galley bus from both sources.

RESET — This momentary position will reinstate galley power if (a) automatic load shedding caused the power to trip initially or, (b) the cause of the galley bus overload has been corrected.

GLY EXT PWR Switch

GLY EXT PWR — Energizes the galley buses if dc power and galley external power is available and the galley bus switches are ON. Switch is magnetically held in the GLY EXT PWR position provided that galley external power is available.

OFF — Removes galley external power from the galley buses even with galley external power connected.

GALLEY PWR OFF Light (3)

Comes on if the galley is automatically disconnected from the associated galley bus. If galley power is disconnected by use of the galley bus switch, the light will not come on. Three lights indicate a generator overload condition. One light indicates a disconnected power condition.

GALLEY PWR OFF

GALLEY EXT PWR IN USE Light

Comes on if GALLEY EXT PWR AVAIL light is on, the galley external power switch is in the GLY EXT PWR position, one or more galley bus switches are ON, and dc power is available.

GALLEY EXT PWR IN USE

GALLEY EXT PWR AVAIL Light (2)

Comes on whenever ac external power of acceptable quality is connected to the external galley receptacle.

(ONE ON MAIN EXT PWR PANEL)

GALLEY EXT PWR AVAIL

FLIGHT ENGINEER'S UPPER PANEL NO. 1

CA1-4150B

ELECTRICAL SYSTEM - Controls and Indicators

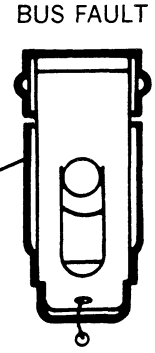

ELEC SYS RESET Switch (1,2,3)

The switch is spring loaded to the center position. A guard and a safety wire prevent inadvertent lifting of the switch to the BUS FAULT position. The momentary BUS FAULT position will provide restoration of power to the faulted generator bus or the ac tie bus by releasing the lockout mechanisms of the associated BTR and APR if the fault has been cleared. The momentary GEN RLY/BUS TIE RLY LOCKOUT position will clear a lockout of the associated GR and/or BTR relays. Movement toward the latter position is not restrained by either guard or safety wire.

GEN FAIL RESET Button

A momentary pushbutton which will reset (turn off) the generator failure light if it is on due to a spurious signal.

(UPPER MAIN CB PANEL)

AC VOLT Meter

Displays voltage of the ac power source as selected by the VOLT/AMP/FREQ selector. Normal and allowable operating ranges are marked on the meter.

FREQ Meter

Displays frequency (Hz) of the ac power source selected by the position of the VOLT/AMP/FREQ selector. Normal and allowable operating ranges are marked on the meter.

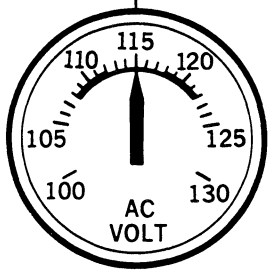

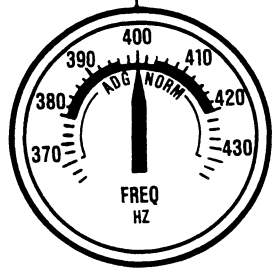

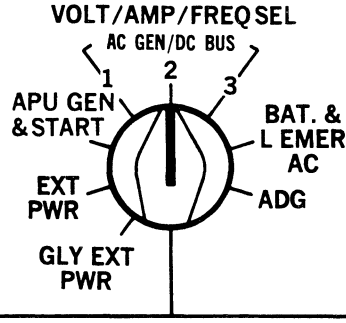

VOLT/AMP/FREQ Selector

Selects power source to be displayed on the ac voltmeter, frequency meter and dc volt/ammeter. When placed in either the 1, 2, or 3 position, ac generator bus voltage, frequency, and dc bus voltage are displayed. In the BAT & L EMER AC position, ac voltage and frequency of the left emergency ac bus, plus battery voltage and amperes are displayed. If the emergency power switch is ON, the voltage and frequency of the inverter are displayed. In the APU GEN & START position, APU starter current and voltage, plus APU generator ac voltage and frequency are displayed. All other positions display only ac voltage and frequency of the selected source.

FLIGHT ENGINEER'S UPPER PANEL NO. 1

CA1-4149A

ELECTRICAL SYSTEM - Controls and Indicators

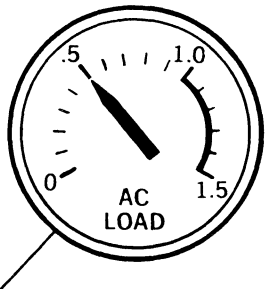

APU AC LOAD Meter
Indicates the load on the generator as compared to its rated load. Reading of .5 means that APU generator is operating at 50% of rated load.

APU GEN
RESET

APU GEN RESET Switch
In APU GEN position, the APU generator control (field) relay (GCR) is normally closed. If the GCR is tripped by a protective circuit or by manual operation of the APU fire control switch, the GCR can be closed by utilizing the momentary RESET position (provided the fault has been cleared and the APU fire control switch is at NORM).

APU GEN OFF Light
Comes on during APU start (before generator is up to speed) or whenever APU generator output does not meet specified electrical requirements and the APU is up to speed. The ELEC cue and MASTER CAUTION lights will also come on except during start sequence. Whenever the APU PWR AVAIL light is on, the APU GEN OFF light will be off.

APU GEN OFF

APU GEN FAIL

APU GEN FAIL Light
Comes on to indicate actual or impending APU generator failure or spurious signal. To reset, a generator failure reset button, located on the Upper Main CB Panel, may be pushed. If signal was spurious, generator failure light will go off.

APU PWR AVAIL Light (2)
Comes on whenever APU generator is providing power of correct phase rotation, voltage, and frequency.

(ONE ON CABIN GROUND SERVICE PANEL)

APU PWR AVAIL

1
ON
OFF

APU GEN BUS Switch (1, 2, 3)
ON — Closes the associated auxiliary power relay (APR) and puts the APU on the bus if the bus is not already powered by the associated engine-driven generator. The APU has priority over external power.
OFF — Disconnects APU from the generator bus.

APU PWR IN USE Light (4)
Comes on when APU PWR AVAIL light is ON, the APU GEN BUS switch is ON, and the electrical system mode has specified an APU priority (APR is closed). The APU PWR IN USE light on the cabin ground service panel comes on when the APU generator supplies the ground service bus thru the ground service relay (GSR).

(ONE ON CABIN GROUND SERVICE PANEL)

APU PWR IN USE

FLIGHT ENGINEER'S UPPER PANEL NO. 1

CA1-127E

ELECTRICAL SYSTEM - Controls and Indicators

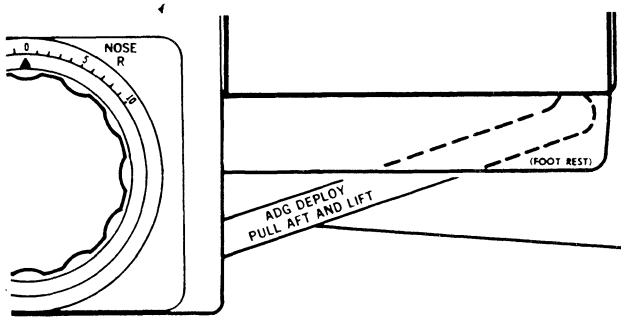

ADG Release Handle (Aft pedestal)

Pulling aft and up breaks safety wire and deploys ADG to produce three-phase power for 115 volts, 400 Hz. ADG output (regulated by a constant-speed propeller) is available at all airspeeds. Range loss due to deployment is about one percent. ADG electrical or hydraulic output is controlled by ADG switch. Once deployed, ADG cannot be stowed until on the ground.

ELEC Cue Light

Comes on whenever one or more of the following lights come on: CSD OIL PRESS LO, GEN OFF, APU GEN OFF (except during normal start), AC BUS OFF, and DC BUS OFF. MASTER CAUTION lights also come on.

ELEC
PRESS TO RESET

EMER BUS OFF Summary Light

Comes on whenever one or more of following lights come on: L EMER AC BUS OFF, R EMER AC BUS OFF, L EMER DC BUS OFF, and R EMER DC BUS OFF. MASTER WARNING lights also come on.

EMER BUS OFF

EMER PWR Switch

OFF – Permits left emergency ac and dc buses to receive power from main distribution system and battery to be charged (if battery switch is in BAT).

ON – Left emergency ac and dc buses are transferred to inverter and battery respectively. ON turns on EMER PWR IN USE lights and disconnects battery charger from battery.

EMER PWR
OFF
ON

(ONE ON F/E UPPER PANEL NO. 1)

EMER PWR IN USE

ADG
R EMER ELEC
HYD

EMER PWR IN USE Light (2)

Comes on when emergency power switch is moved to ON. Indicates that essential equipment is connected to emergency power source.

ADG Switch

R EMER ELEC – With ADG deployed ADG bus powers right emergency ac bus and, through associated T/R 3, right emergency dc bus.

HYD – Normal inflight position. With ADG deployed, connects ADG bus to auxiliary hydraulic pump 1.

OVERHEAD PANEL

CA1-128 H

ELECTRICAL SYSTEM - Controls and Indicators

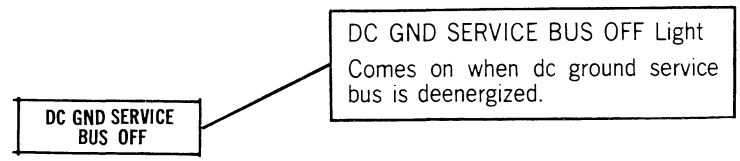

(FLIGHT ENGINEER'S UPPER PANEL NO. 2)

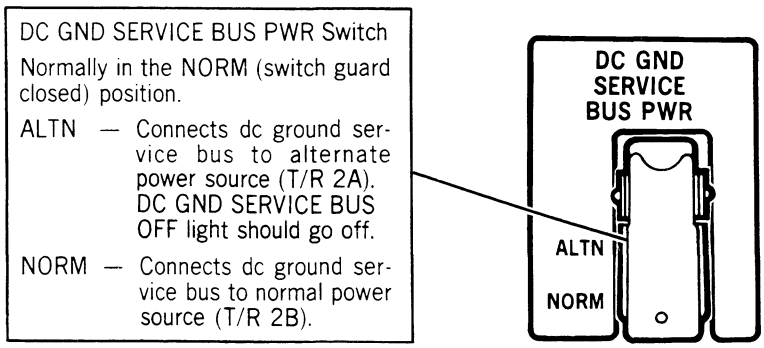

FLIGHT ENGINEER'S EQUIPMENT PANEL

CA1-5403 A

Effective on airplanes with DC Ground Service Bus Alternate Power Source (SB 24-90 incorporated or Production Equivalent).

ELECTRICAL SYSTEM

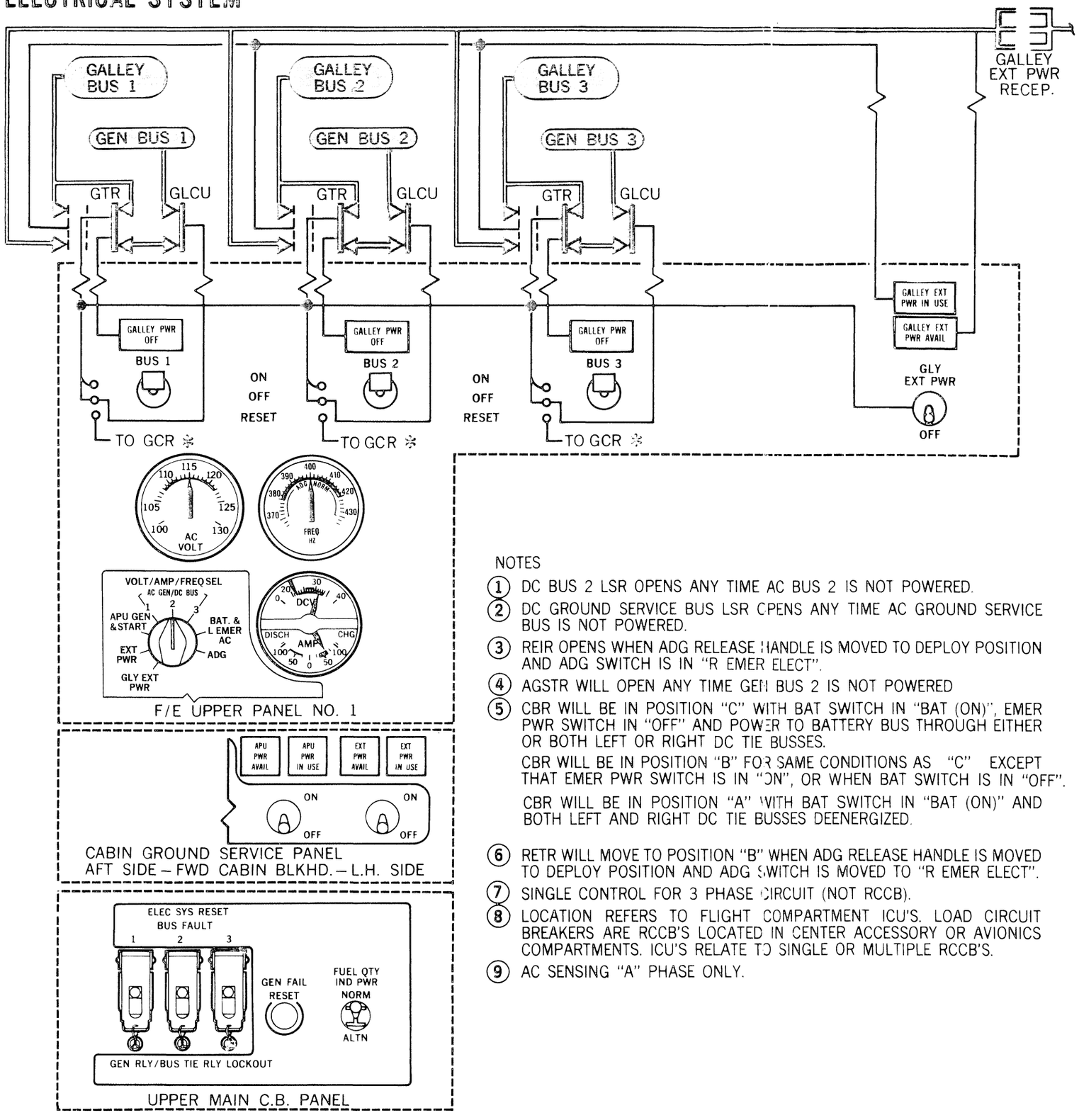

NOTES

1. DC BUS 2 LSR OPENS ANY TIME AC BUS 2 IS NOT POWERED.
2. DC GROUND SERVICE BUS LSR OPENS ANY TIME AC GROUND SERVICE BUS IS NOT POWERED.
3. REIR OPENS WHEN ADG RELEASE HANDLE IS MOVED TO DEPLOY POSITION AND ADG SWITCH IS IN "R EMER ELECT".
4. AGSTR WILL OPEN ANY TIME GEN BUS 2 IS NOT POWERED
5. CBR WILL BE IN POSITION "C" WITH BAT SWITCH IN "BAT (ON)", EMER PWR SWITCH IN "OFF" AND POWER TO BATTERY BUS THROUGH EITHER OR BOTH LEFT OR RIGHT DC TIE BUSSES.

   CBR WILL BE IN POSITION "B" FOR SAME CONDITIONS AS "C" EXCEPT THAT EMER PWR SWITCH IS IN "ON", OR WHEN BAT SWITCH IS IN "OFF".

   CBR WILL BE IN POSITION "A" WITH BAT SWITCH IN "BAT (ON)" AND BOTH LEFT AND RIGHT DC TIE BUSSES DEENERGIZED.
6. RETR WILL MOVE TO POSITION "B" WHEN ADG RELEASE HANDLE IS MOVED TO DEPLOY POSITION AND ADG SWITCH IS MOVED TO "R EMER ELECT".
7. SINGLE CONTROL FOR 3 PHASE CIRCUIT (NOT RCCB).
8. LOCATION REFERS TO FLIGHT COMPARTMENT ICU'S. LOAD CIRCUIT BREAKERS ARE RCCB'S LOCATED IN CENTER ACCESSORY OR AVIONICS COMPARTMENTS. ICU'S RELATE TO SINGLE OR MULTIPLE RCCB'S.
9. AC SENSING "A" PHASE ONLY.

LEGEND

ADG	AIR DRIVEN GENERATOR
AGSTR	AC GROUND SERVICE TRANSFER RELAY
AHP1PTR	AUXILIARY HYDRAULIC PUMP 1 POWER TRANSFER RELAY
APR	AUXILIARY POWER RELAY
APU	AUXILIARY POWER UNIT
BCU	BUS CONTROL UNIT
BTR	BUS TIE RELAY
CBR	CHARGER BATTERY RELAY
CSD	CONSTANT SPEED DRIVE
EPR	EXTERNAL POWER RELAY
GCR *	GALLEY CONTROL RELAY
GCR	GENERATOR CONTROL RELAY
GCU	GENERATOR CONTROL UNIT
GLCU	GALLEY LOAD CONTROL UNIT
GR	GENERATOR RELAY
GSR	GROUND SERVICE RELAY
GTR	GALLEY TRANSFER RELAY
ICU	INDICATOR CONTROL UNIT
LSR	LOAD SHEDDING RELAY
RCCB	REMOTE CONTROL CIRCUIT BREAKER
REIR	RT EMER ISOLATION RELAY
RETR	RT EMER TRANSFER RELAY
TR	TRANSFORMER/RECTIFIER

- FWD AND AFT OVERHEAD CIRCUIT BREAKER PANEL
- F/E OVERHEAD CIRCUIT BREAKER PANEL
- UPPER MAIN CIRCUIT BREAKER PANEL.
- LOWER MAIN CIRCUIT BREAKER PANEL.
- POWER FROM BATTERY BUS.
- POWER FROM BATTERY DIRECT BUS.
- † POWER COMES FROM BATTERY BUS THROUGH BUS/APU CONTROL UNIT OR FROM GENERATORS'S PMG ONCE A GENERATOR IS UP TO SPEED.

- AC SYSTEM
- INVERTER OUTPUT AND ADG AC POWER
- DC SYSTEM
- BATTERY POWER
- APU POWER
- ELECTRICALLY ACTUATED
- MECHANICALLY ACTUATED
- RCCB NORMALLY CLOSED
- RCCB NORMALLY OPEN

CA1-4147 D

Effective for aircraft without DC Ground Service Bus Alternate Power Source.

ELECTRICAL SYSTEM

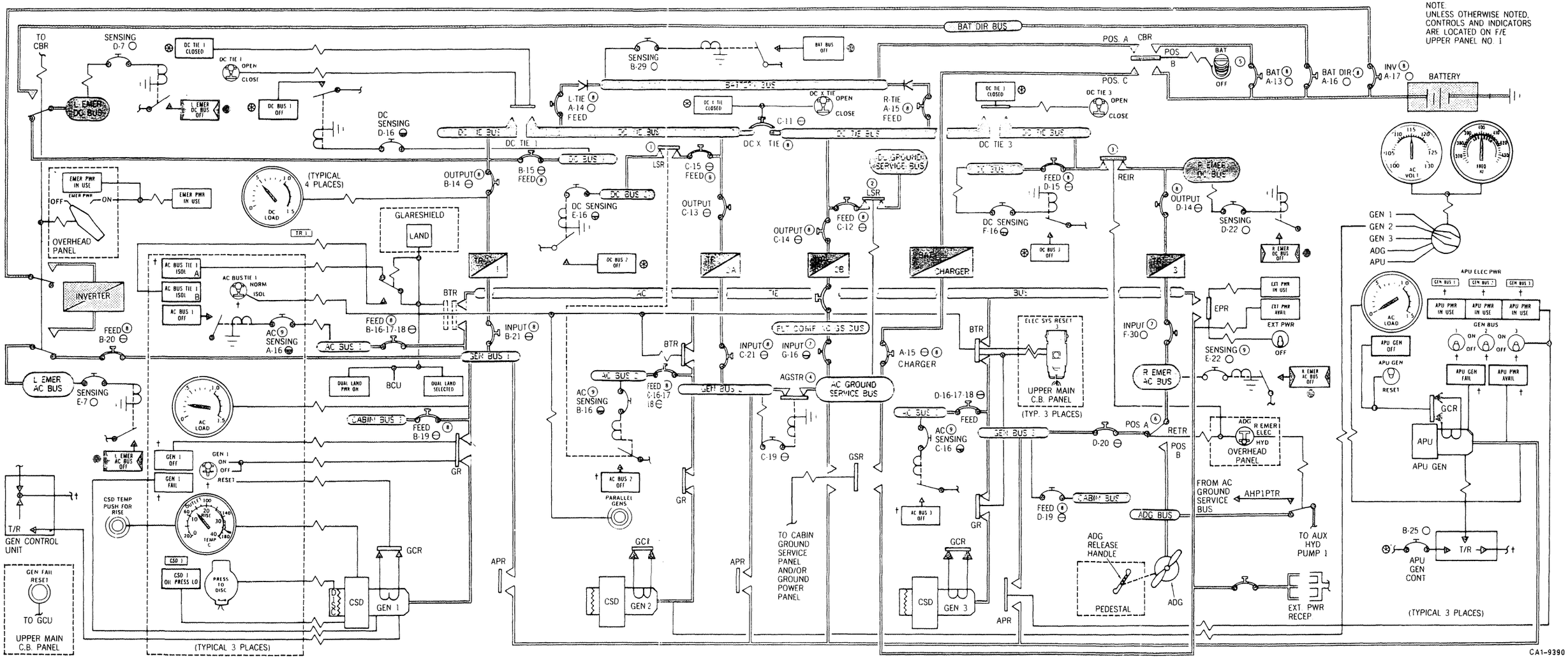

ELECTRICAL SYSTEM

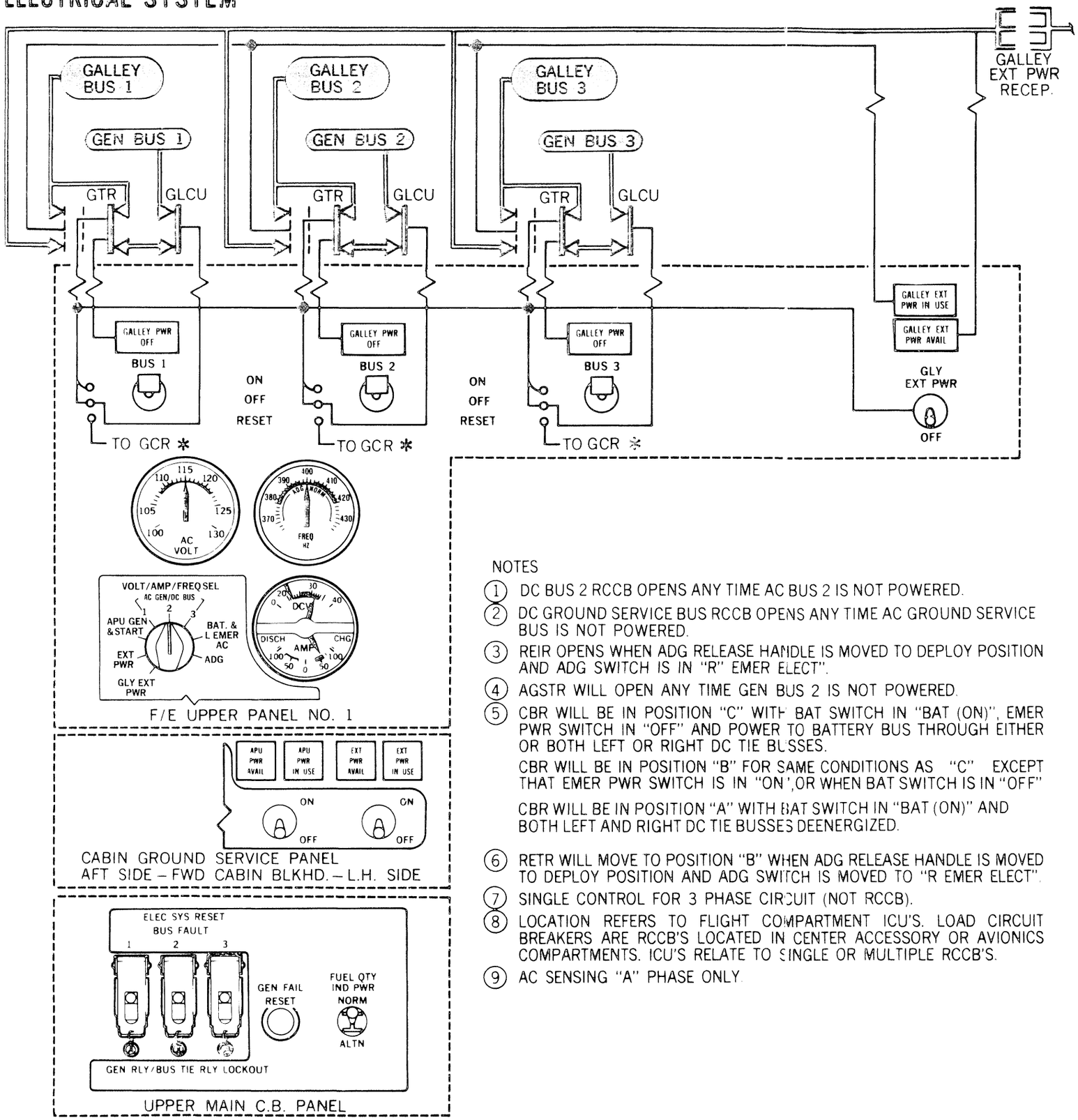

NOTES

1. DC BUS 2 RCCB OPENS ANY TIME AC BUS 2 IS NOT POWERED.
2. DC GROUND SERVICE BUS RCCB OPENS ANY TIME AC GROUND SERVICE BUS IS NOT POWERED.
3. REIR OPENS WHEN ADG RELEASE HANDLE IS MOVED TO DEPLOY POSITION AND ADG SWITCH IS IN "R" EMER ELECT".
4. AGSTR WILL OPEN ANY TIME GEN BUS 2 IS NOT POWERED.
5. CBR WILL BE IN POSITION "C" WITH BAT SWITCH IN "BAT (ON)", EMER PWR SWITCH IN "OFF" AND POWER TO BATTERY BUS THROUGH EITHER OR BOTH LEFT OR RIGHT DC TIE BUSSES.

   CBR WILL BE IN POSITION "B" FOR SAME CONDITIONS AS "C" EXCEPT THAT EMER PWR SWITCH IS IN "ON", OR WHEN BAT SWITCH IS IN "OFF"

   CBR WILL BE IN POSITION "A" WITH BAT SWITCH IN "BAT (ON)" AND BOTH LEFT AND RIGHT DC TIE BUSSES DEENERGIZED.
6. RETR WILL MOVE TO POSITION "B" WHEN ADG RELEASE HANDLE IS MOVED TO DEPLOY POSITION AND ADG SWITCH IS MOVED TO "R EMER ELECT".
7. SINGLE CONTROL FOR 3 PHASE CIRCUIT (NOT RCCB).
8. LOCATION REFERS TO FLIGHT COMPARTMENT ICU'S. LOAD CIRCUIT BREAKERS ARE RCCB'S LOCATED IN CENTER ACCESSORY OR AVIONICS COMPARTMENTS. ICU'S RELATE TO SINGLE OR MULTIPLE RCCB'S.
9. AC SENSING "A" PHASE ONLY.

LEGEND

ADG	AIR DRIVEN GENERATOR
AGSTR	AC GROUND SERVICE TRANSFER RELAY
AHP1PTR	AUXILIARY HYDRAULIC PUMP 1 POWER TRANSFER RELAY
APR	AUXILIARY POWER RELAY
APU	AUXILIARY POWER UNIT
BCU	BUS CONTROL UNIT
BTR	BUS TIE RELAY
CBR	CHARGER BATTERY RELAY
CSD	CONSTANT SPEED DRIVE
DGTR	DC GROUND SERVICE TRANSFER RELAY
EPR	EXTERNAL POWER RELAY
GCR*	GALLEY CONTROL RELAY
GCR	GENERATOR CONTROL RELAY
GCU	GENERATOR CONTROL UNIT
GLCU	GALLEY LOAD CONTROL UNIT
GR	GENERATOR RELAY
GSR	GROUND SERVICE RELAY
GTR	GALLEY TRANSFER RELAY
ICU	INDICATOR CONTROL UNIT
RCCB	REMOTE CONTROL CIRCUIT BREAKER
REIR	RT EMER ISOLATION RELAY
RETR	RT EMER TRANSFER RELAY
TR	TRANSFORMER/RECTIFIER

- FWD AND AFT OVERHEAD CIRCUIT BREAKER PANEL.
- F/E OVERHEAD CIRCUIT BREAKER PANEL.
- UPPER MAIN CIRCUIT BREAKER PANEL.
- LOWER MAIN CIRCUIT BREAKER PANEL.
- POWER FROM BATTERY BUS.
- POWER FROM BATTERY DIRECT BUS.
- † POWER COMES FROM BATTERY BUS THROUGH BUS/APU CONTROL UNIT OR FROM GENERATORS'S PMG ONCE A GENERATOR IS UP TO SPEED.

- AC SYSTEM
- INVERTER OUTPUT AND ADG AC POWER
- DC SYSTEM
- BATTERY POWER
- APU POWER
- ELECTRICALLY ACTUATED
- MECHANICALLY ACTUATED
- RCCB NORMALLY CLOSED
- RCCB NORMALLY OPEN

CA1-8738

Effective for aircraft with DC Ground Service Bus Alternate Power Source.

Printed in U.S.A.

ELECTRICAL SYSTEM