GENERAL

The fuel system can be divided into an aircraft fuel system, an engine fuel system, and an APU fuel system.
The aircraft fuel system supplies fuel to the engines, and if applicable the APU, and is controlled from the FUEL panel. Failures will be detected and the relevant alerts are presented.

Fuel is stored in two integral wing tanks, one in each outer wing, and a separate collector tank in each nacelle. Each wing tank is equipped with a dual ventilation system. If one system should become blocked, the other is capable of providing sufficient ventilation for normal operation. To remove accumulated water, a drain valve is installed at the lowest point of the wing tank.

Each collector tank receives fuel by gravity flow from its corresponding wing tank and feeds its respective engine fuel supply system. Each collector tank is ventilated through an open line into the corresponding wing tank.

A fire shut-off valve is installed in each engine fuel supply system. The valve closes when the fire handle is pulled, shutting off the fuel supply to the respective engine.

For APU equipped aircraft

The APU fuel system is supplied form the right-hand collector tank. The APU fuel shut-off valve is normally controlled via the APU start selector. The valve can be closed by the APU automatic shut down system or the fire protection systems if either system is activated.

Fuel pumps

Two electrically driven fuel pumps are installed in the bottom of each collector tank. The pumps supply fuel under pressure to the engine driven high-pressure pumps. Each pump has the capacity to supply sufficient pressure for all engine power requirements.

Crossfeed

Engine fuel supply lines are interconnected so that each fuel pump can supply fuel to either engine fuel supply line via crossfeed valves. These valves are normally closed. They can be opened to supply an engine from the opposite wing tank or to supply both engines from either wing tank. Cross feeding from wing tank to wing tank is not possible.

Fuel capacities

TANK CAPACITY			
	Wing tanks:	**Collector tanks:**	**Total:**
Liters:	5036	100	5136
US gallons:	1330	26	1356
Kilograms:	4080	80	4160
Pounds:	9000	180	9180

Conversion factors:
- 3.7854118 l/US gallon
- 1.2346153 l/kg
- 0.45359237 kg/lb

Functional diagram

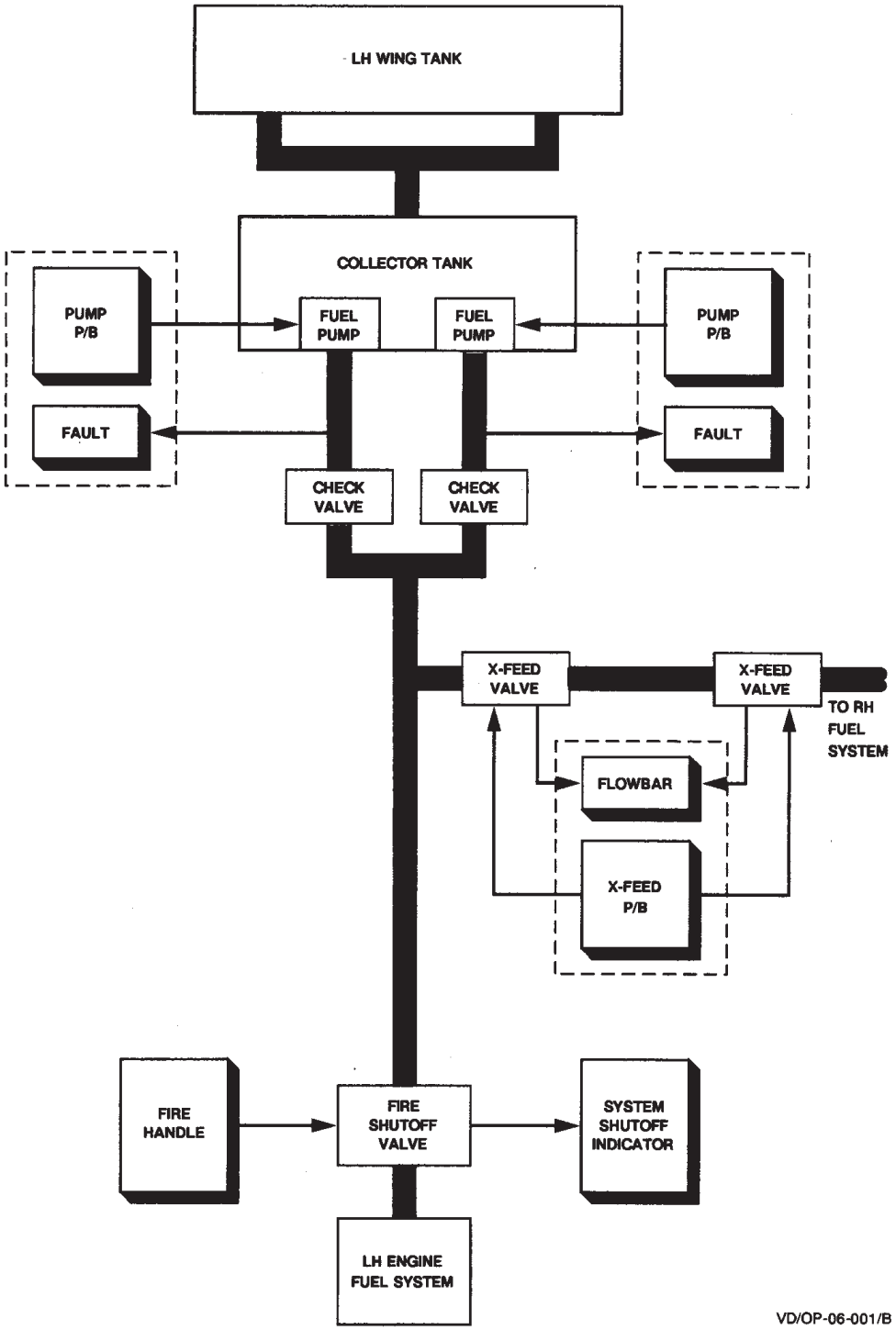

Functional diagram - For aircraft not equipped with APU

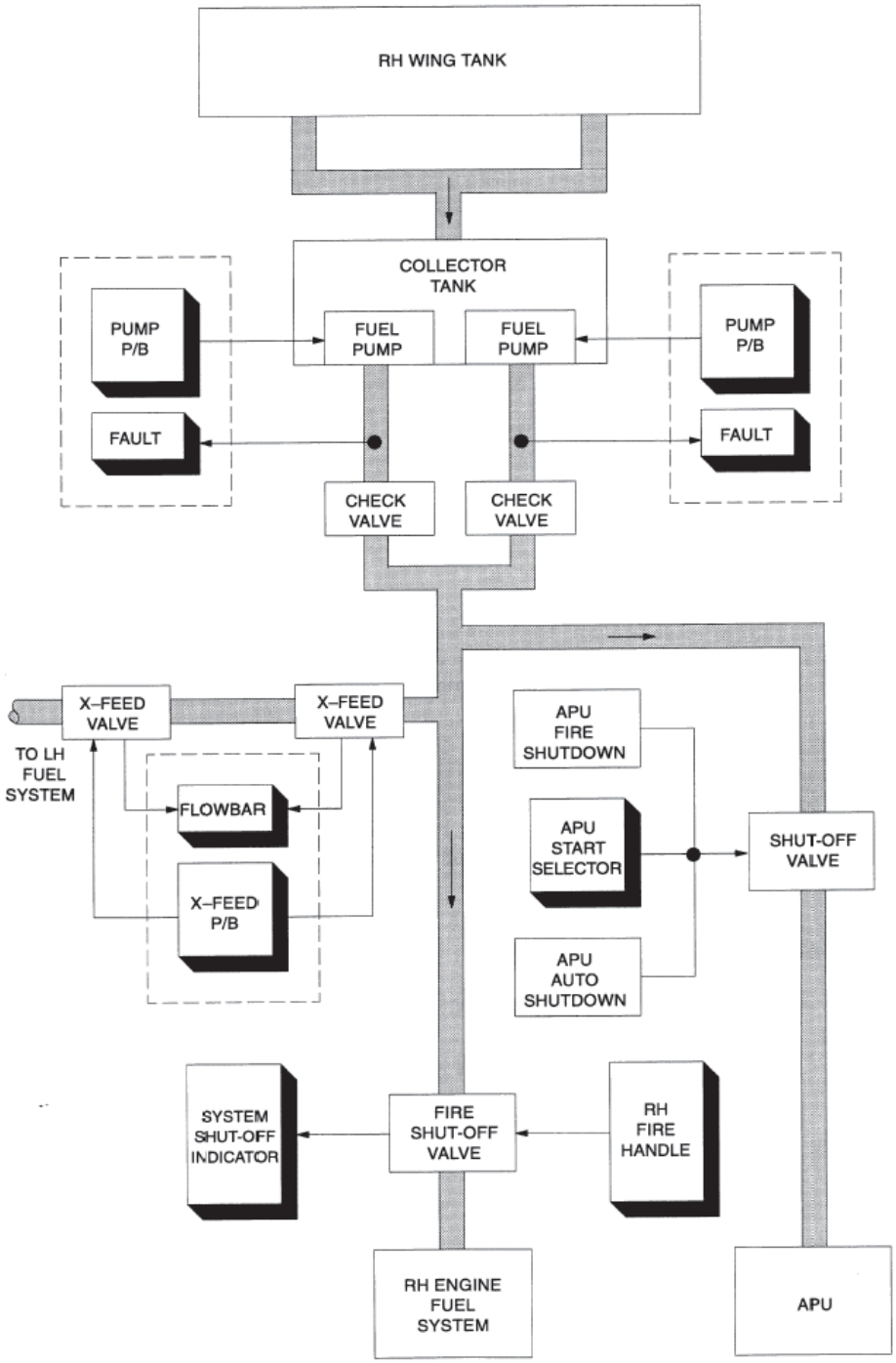

Functional diagram - For aircraft equipped with APU

Controls and indicators

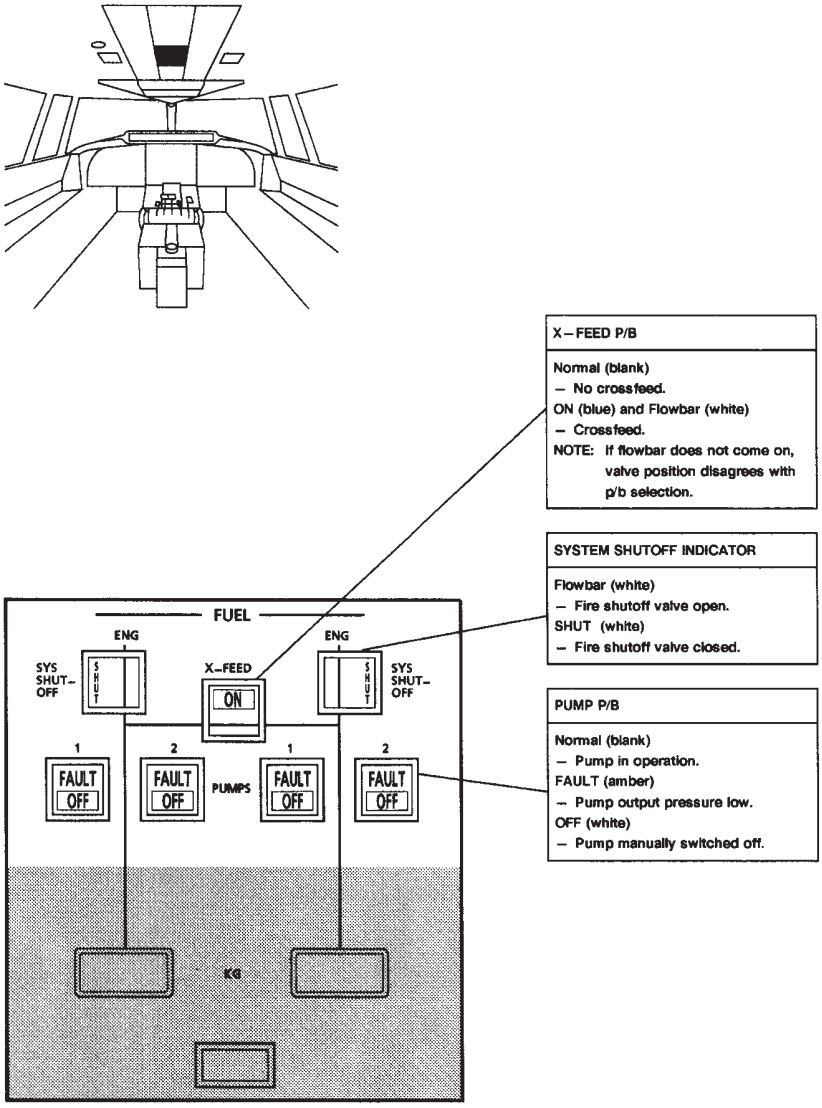

Controls and indicators

Alerts

CONDITION(S) / LEVEL		AURAL	MWL/MCL	CAP	LOCAL
PUMP FAULT	1				FAULT

FUEL QUANTITY

Description

The aircraft is equipped with a fuel quantity indication system. This system consists of several tank probes, a combined processor/fuel quantity totalizer, displays for each wing tank quantity, and a level light.

Additionally, magnetic fuel level indicators are installed.

Fuel quantity data, measured by the probes, is fed to the processor, where it is corrected for density and converted to kilograms. Total fuel quantity (including collector tanks) is then displayed at the fuel quantity totalizer. Fuel quantity for each wing tank (including collector tank) is displayed at the FUEL panel and fuel service panel.

A level light is provided at the FUEL panel to indicate a fuel unbalance between the wing tanks, or a low fuel quantity in one wing tank.

For quantity checks on the ground, each wing tank is equipped with a magnetic fuel level indicator. The accuracy of the indicated quantity is similar to that of the fuel quantity indication system (aircraft must be in level position). The indicator is calibrated in kilograms or liters and includes the fuel in the collector tank.

FUNCTIONAL DIAGRAM

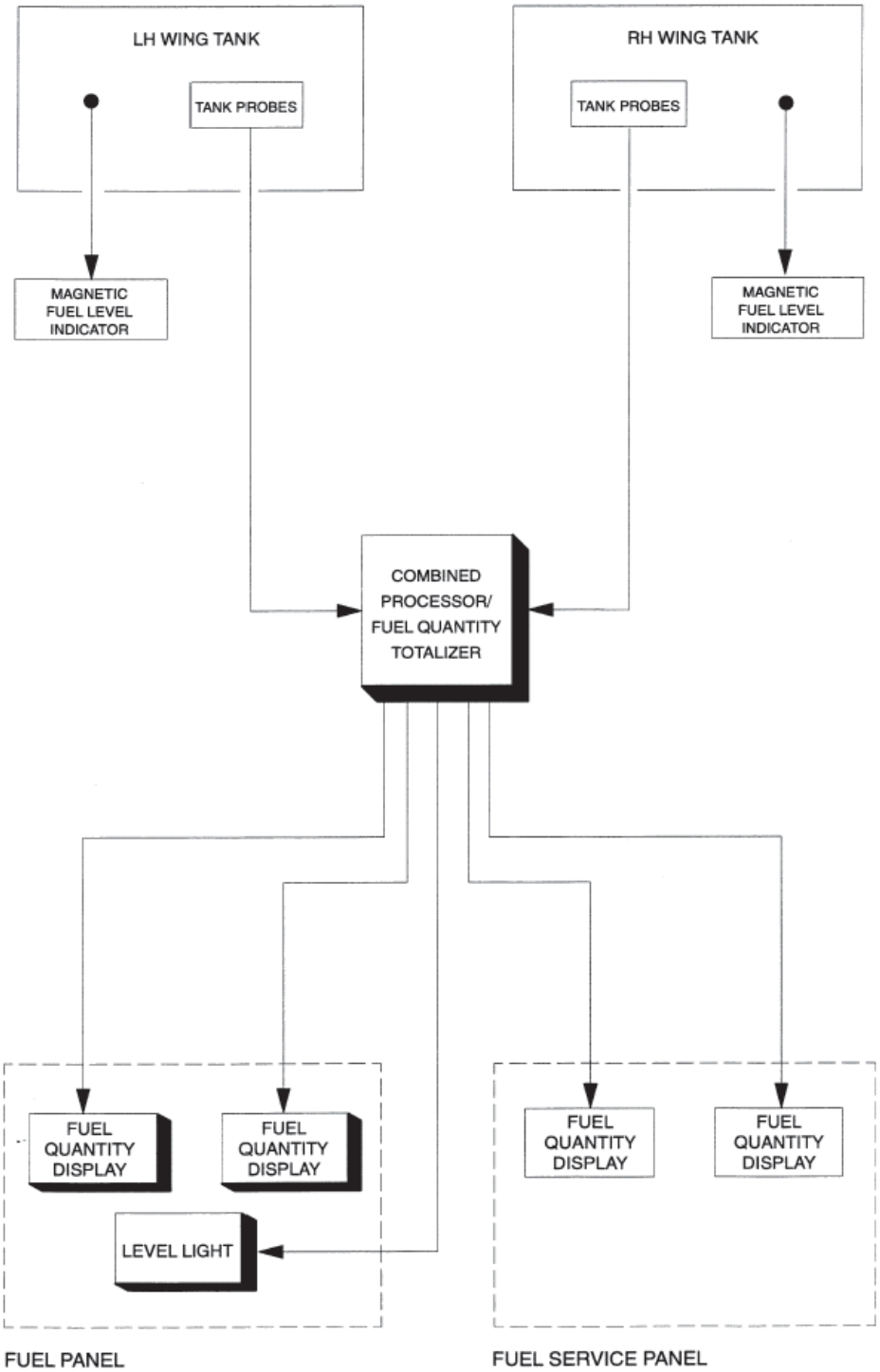

Controls and indicators

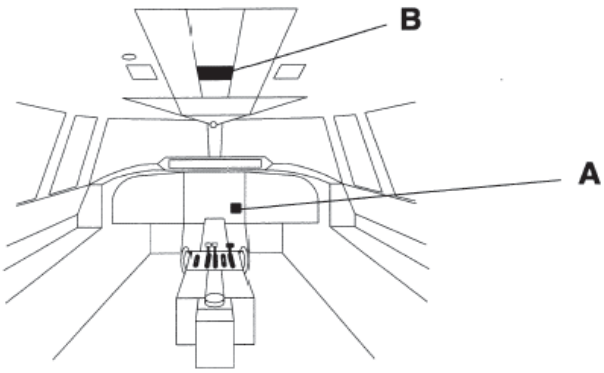

A FUEL QUANTITY TOTALIZER

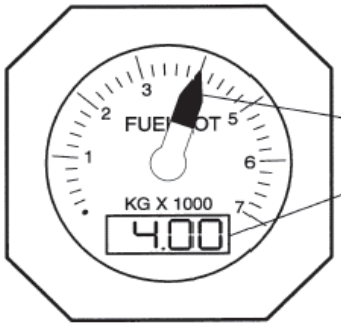

FUEL QUANTITY INDICATION

Shows total fuel quantity in wing tanks.

NOTE: Displayed values include 80 kg in collector tanks.

B FUEL PANEL

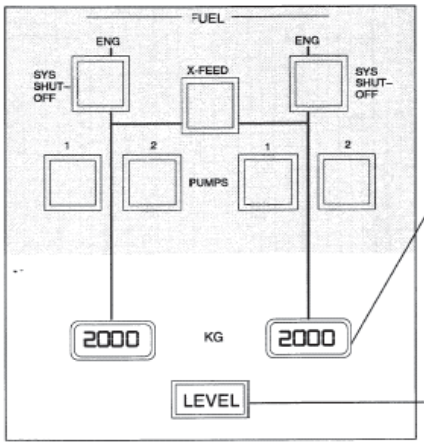

FUEL QUANTITY DISPLAY

Shows fuel quantity in corresponding wing tank.

NOTE:
1. *Displayed value includes 40 kg in collector tank.*
2. *When the wing tank is empty LO 40 (LO flashes) is shown.*

LEVEL LIGHT

LEVEL (amber)
- Fuel unbalance between the wing tanks of 250 kg or more.
- Fuel quantity in one wing tank drops below 200 kg.

Controls and indicators

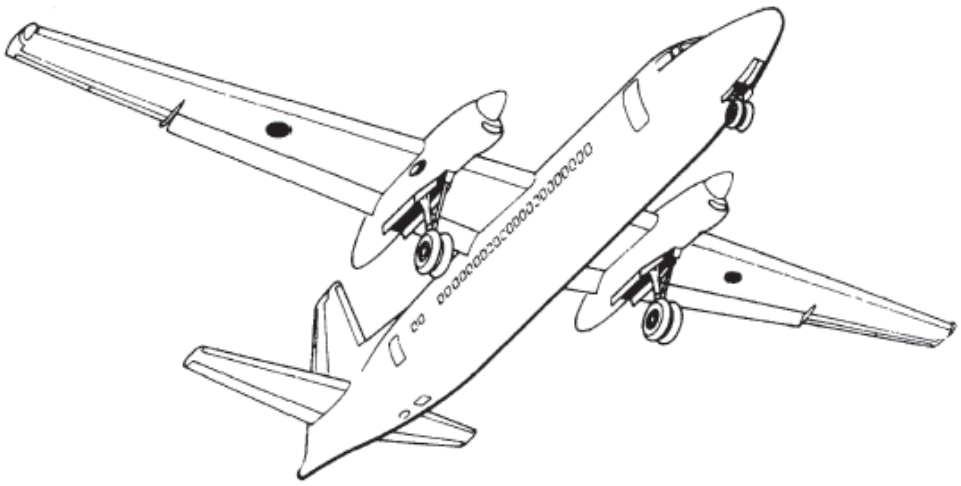

WARNING: Depending system configuration calibration of the magnetic level indicator is in kilograms, pounds or in liters.

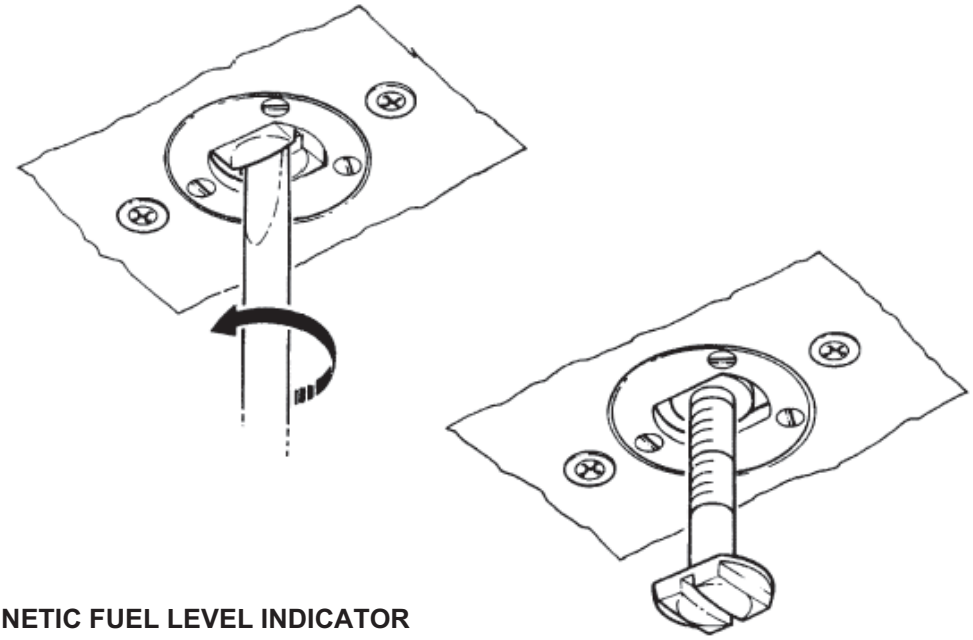

MAGNETIC FUEL LEVEL INDICATOR

- Push and turn 90 degrees to unlock indicator.
- Lower the indicator until built-in-magnet is felt to float.
- Read indicator.

Alerts

CONDITION(S) / LEVEL		AURAL	MWL/MCL	CAP	LOCAL
FUEL LEVEL	2		CAUTION		LEVEL

RE-FUELING AND DE-FUELING

Description

Pressure re-and de-fueling of the aircraft is accomplished through a single connection, located at the underside of the RH wing and is controlled from the fuel service panel which is installed in RH nacelle. Instructions for re-and de-fueling are engraved on a plate next to the fuel service panel.

Maximum re-fueling pressure : 60 psi
Maximum de-fueling suction pressure : 11 psi

Gravity re-fueling of the wing tanks is also possible through over wing filler points.

Controls and indicators

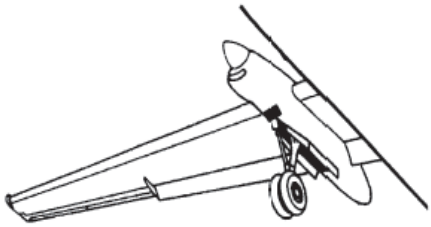

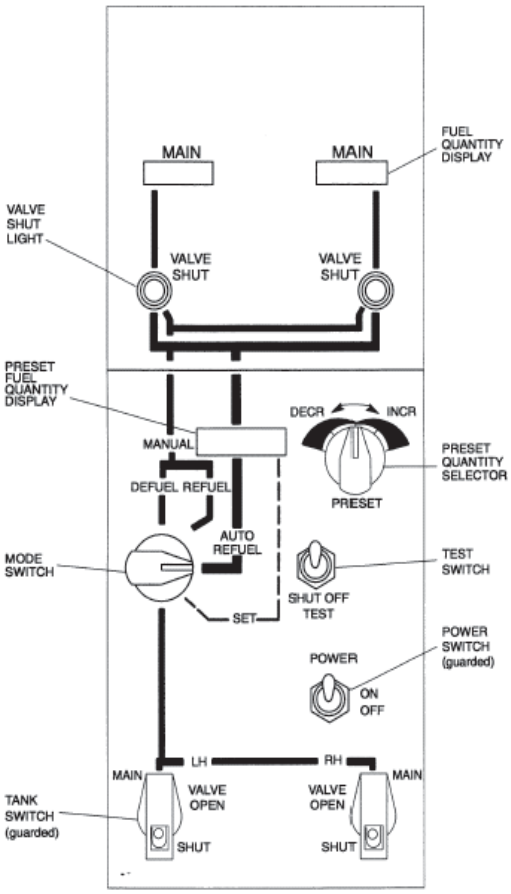

FUEL SERVICE PANEL

SELECT		CHECK	
RE- AND DEFUELLING			
POWER SWITCH	ON	ALL DISPLAYS READ QUANTITY	ON
TANK SWITCHES	SHUT	VALVE SHUT LIGHTS	ON
REFUELLING		**AUTOMATIC**	
MODE SWITCH	SET		
PRESENT REQUIRED QUANTITY		PRESET QUANTITY	INCREASE/DECR
MODE SWITCH	AUTO	VALVE SHUT LIGHT(S)	OUT
		SELECTED QUANTITY IS REACHED WHEN VALVE SHUT LIGHT	ON
WHEN THE RQUIRED QUANTITY IS REACHED:		CHECK TOTAL OF INDIVIDUAL TANK QUANTITIES EQUALS PRESET VALUE	
MODE SWITCH	SET/AUTO		
SHUT OFF TEST			
OPERATE TEST SWITCH DURING REFUELLING		ALL VALVE SHUT LIGHTS	ON
		DISPENSER FLOW	STOP
		DISPLAYS TANKS	STATIONARY
	IN AUTO MODE	PRESET DISPLAYS	ALL 8
RELEASE TEST SWITCH		ALL VALVE SHUT LIGHTS	OUT
		DISPENSER FLOW	CONTINUES
RE- AND DEFUELLING		**MANUAL**	
POWER SWITCH	ON	ALL DISPLAYS READ QUANTITY	ON
TANK SWITCHES	SHUT	VALVE SHUT LIGHTS	ON
MODE SWITCH	MANUAL		
TANK SWITCH(ES)	OPEN		
WHEN THE REQUIRED QUANTITY IS REACHED			
TANK SWITCH(ES)	SHUT	APPLICABLE VALVE SHUT LIGHT(S)	ON
AFTER RE- AND DEFUELLING			
TANK SWITCHES	SHUT	VALVE SHUT LIGHTS	ON
POWER SWITCH	OFF	ALL DISPLAYS AND LIGHTS	OFF
CAUTION		FUEL PANEL CALIBRATED IN KG	
IF ANY INDICATION IS NOT CONFORMING TO INSTRUCTIONS		STOP REFUELLING AND REFER TO MAINTENANCE MANUAL CHAP. 12	

INSTRUCTION PLATE

Controls and indicators

SYSTEM OPERATION

Fueling

Before all re- and de-fueling:

Power switch ..... ON
Tank switches.....SHUT
Fuel quantity displays.....CHECK
Valve shut lights ..... CHECK ON

Re-fueling

Auto re-fueling

Mode switch ..... SET
Preset QTY SEL.....INCR
Till required quantity is indicated on preset fuel quantity display
Dispenser pump .....START
Mode switch ..... AUTO REFUEL
Valve shut lights ..... CHECK OUT

Shutoff valve test:

Test switch ..... OPERATE

Within seven seconds re-fueling should stop and the VALVE SHUT light should illuminate on. If not see ‘Shutoff valve malfunctioning’.

When re-fueling is completed:

Valve shut lights ..... CHECK ON
Tank quantities.....CHECK
Power switch ..... OFF

CAUTION: DO NOT SET POWER SWITCH TO OFF WHILE DISPENSER PRESSURE IS STILL ON

Manual re-fueling

Mode switch ..... MANUAL REFUEL
Dispenser pump .....START
Tank switches.....VALVE OPEN
Valve shut lights ..... CHECK OUT

Shutoff valve test:

Test switch ..... OPERATE

Within seven seconds re-fueling should stop and the VALVE SHUT light should illuminate on. If not see 'Shutoff valve malfunctioning'.

When individual tank quantity is reached:

Tank switch .....SHUT
Valve shut light..... CHECK ON

When both tanks switches are shut:

Power switch ..... OFF

Shutoff valve malfunctioning

If a fueling shutoff system is unserviceable:

Dispenser pump .....STOP
Overwing filler cap..... OPEN
Dispenser pump .....START

Stop re-fueling at dispenser when completed.

Crossfeeding

To feed both engines from one wing tank:

X-feed..... ON
Flowbar.....CHECK
Pumps (tank in use) ..... ON
Pumps (other tank)..... OFF

To feed one engine from both wingtanks:

X-feed..... ON
Flowbar.....CHECK
Pumps .....ALL ON

Use of magnetic fuel level indicators

In case of a malfunction of the normal fuel quantity indication system, use the manually operated magnetic fuel-level indicators. The indicators are calibrated either in liters or kilograms. Be aware that the indication is affected by bank angles in case the surface is not level.

WARNING: Depending system configuration The magnetic level indicators are calibrated either in liters, pounds or kilograms.