CFM56-3 REGULATION

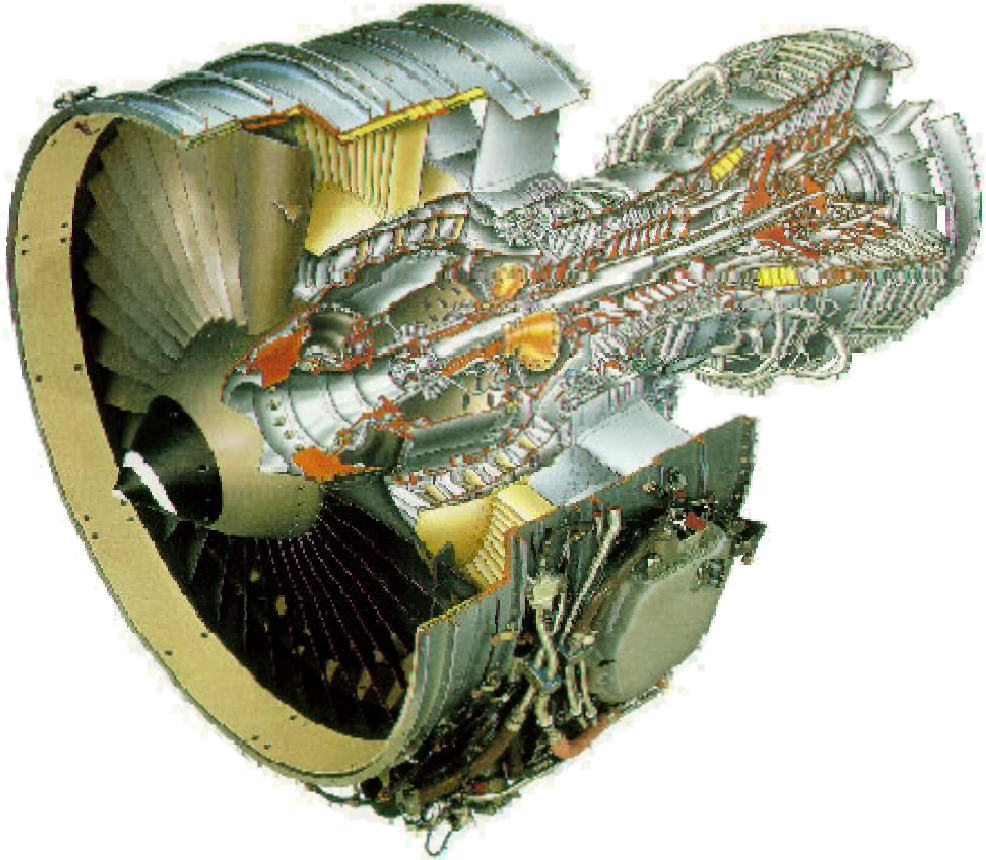

CFM56 - 3

... ONE TAKE OFF

EVERY

8 SECONDS !!!

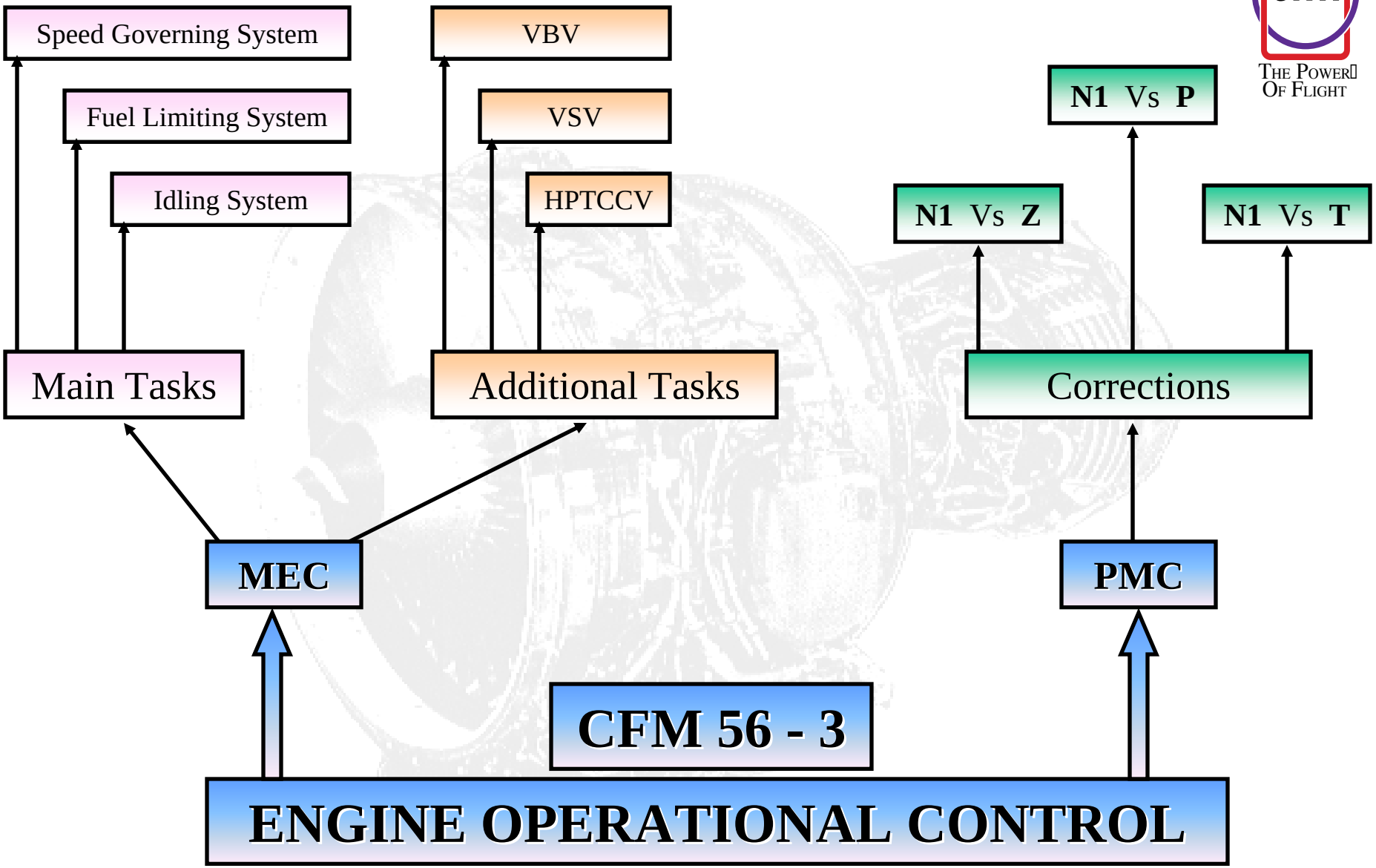
Speed Governing System
Fuel Limiting System
Idling System
VBV
VSV
HPTCCV
N1 Vs P
N1 Vs Z
N1 Vs T
Main Tasks
Additional Tasks
Corrections
MEC
PMC
CFM 56 - 3
ENGINE OPERATIONAL CONTROL

ENGINE OPERATIONAL CONTROL

- The **CFM56-3** engine control system consists of both:

  - **HYDRO MECHANICAL UNIT**
  - **ELECTRONIC UNIT**

HYDRO MECHANICAL UNIT

- **MEC** ⇨ Main Engine Control

  Automatically schedules:

  – **WF** (Fuel Flow) N2
  – **VBV** (Variable Bleed Valve)
  – **VSV** (Variable Stator Vane)
  – **HPTCCV** (High Pressure Turbine Clearance Control Valve)

ELECTRONIC UNIT

- **PMC** ⇨ Power Management Control
  - Provide FAN scheduling N1

CONTROL SYSTEM SCHEMATIC

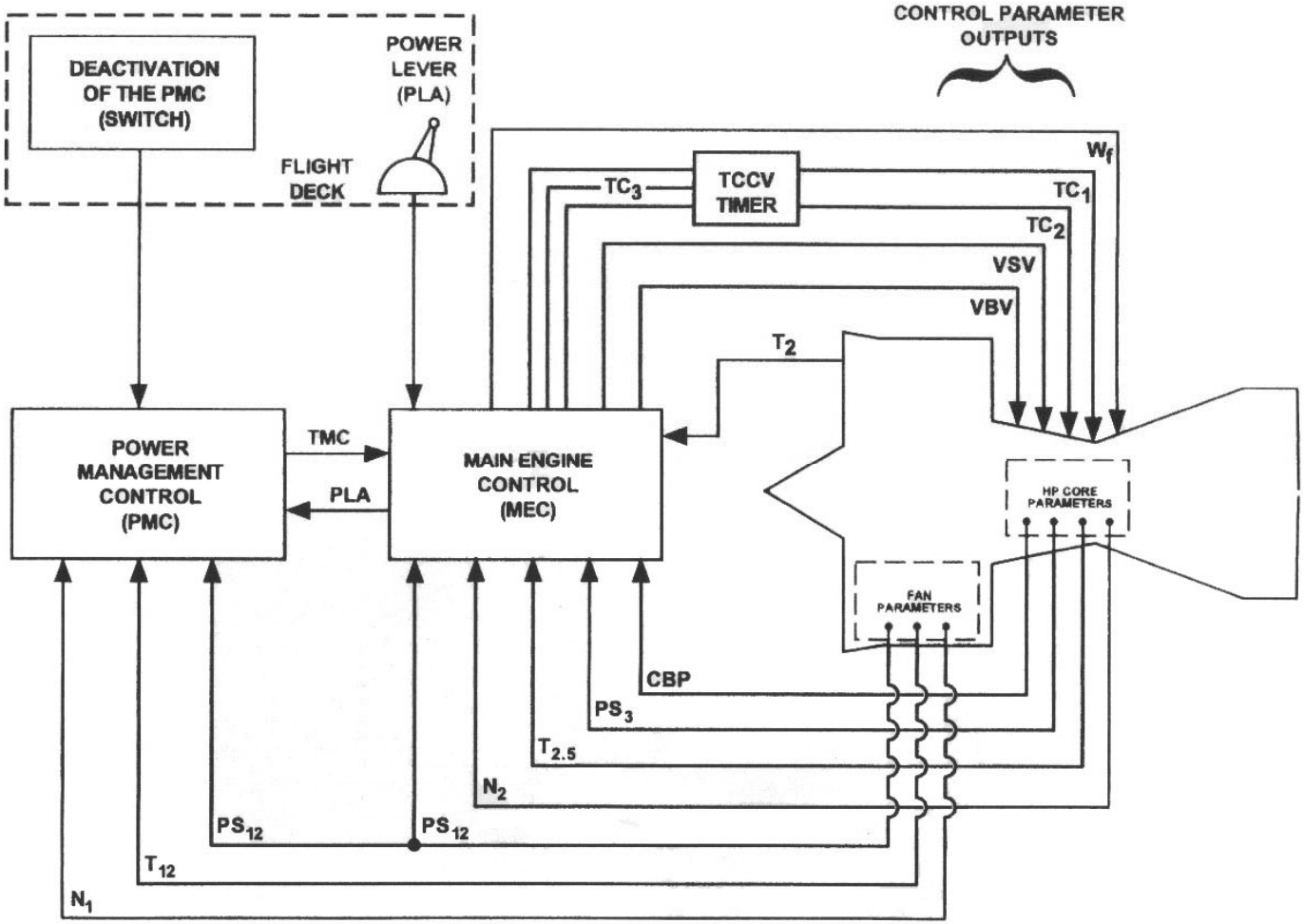

CONTROL SYSTEM SCHEMATIC

(Cont'd)

N1	⇨Fan Speed
N2	⇨Core Speed
WF	⇨Fuel Flow
TMC	⇨Torque Motor Current
PS12	⇨Fan Inlet Static Air Pressure
PS3	⇨Compressor Discharge Pressure
CBP	⇨Compressor Bleed Pressure
T12	⇨Fan Inlet Total Air Temperature
T2.5	⇨HPC Inlet Air Temperature
T2	⇨Fan Inlet Temperature
TC1	⇨Turbine Clearance Control 5Th Stage
TC2	⇨Turbine Clearance Control 9Th Stage
TC3	⇨Turbine Clearance Control Timer Signal

ENGINE STATIONS

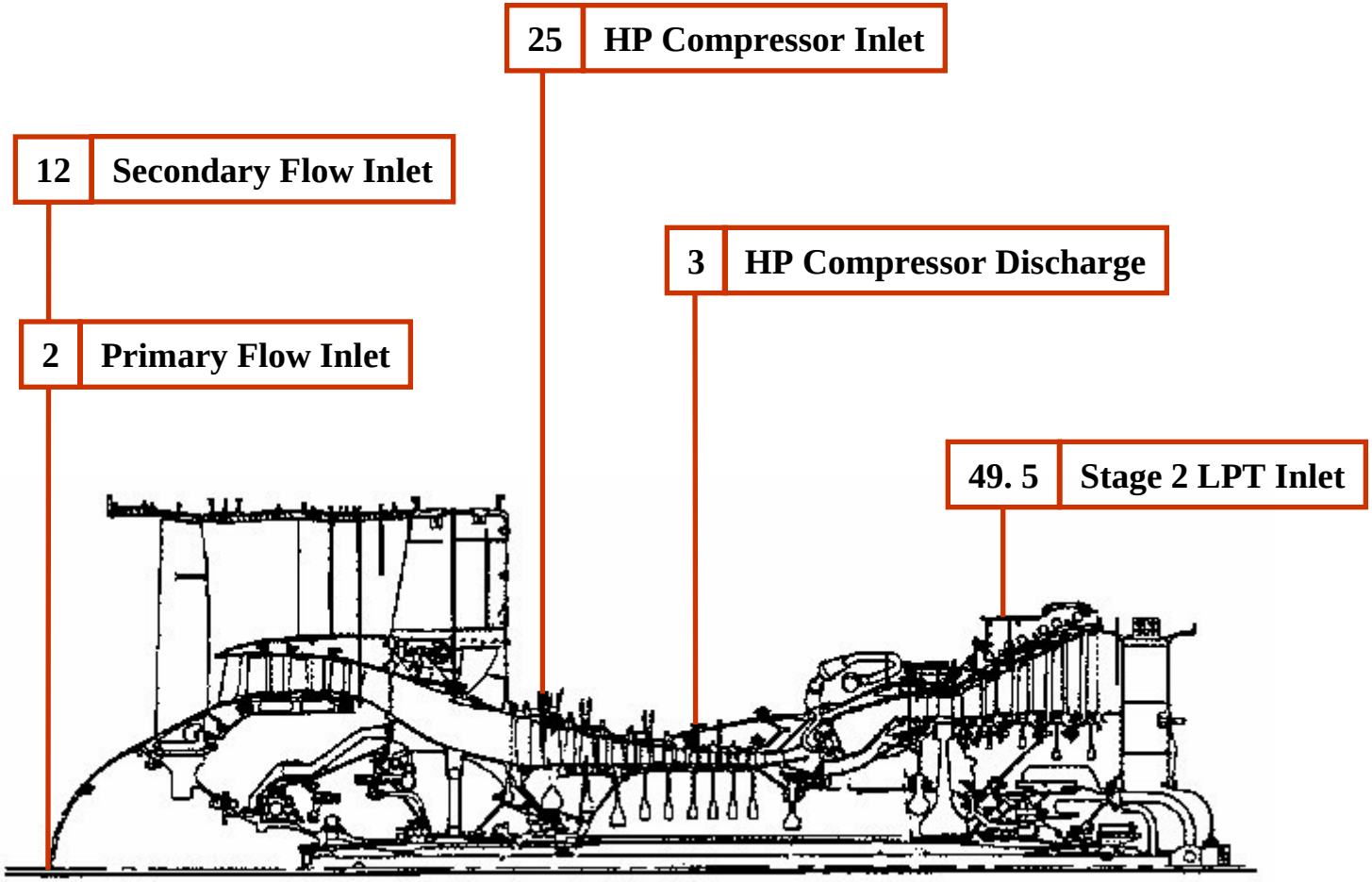

MEC

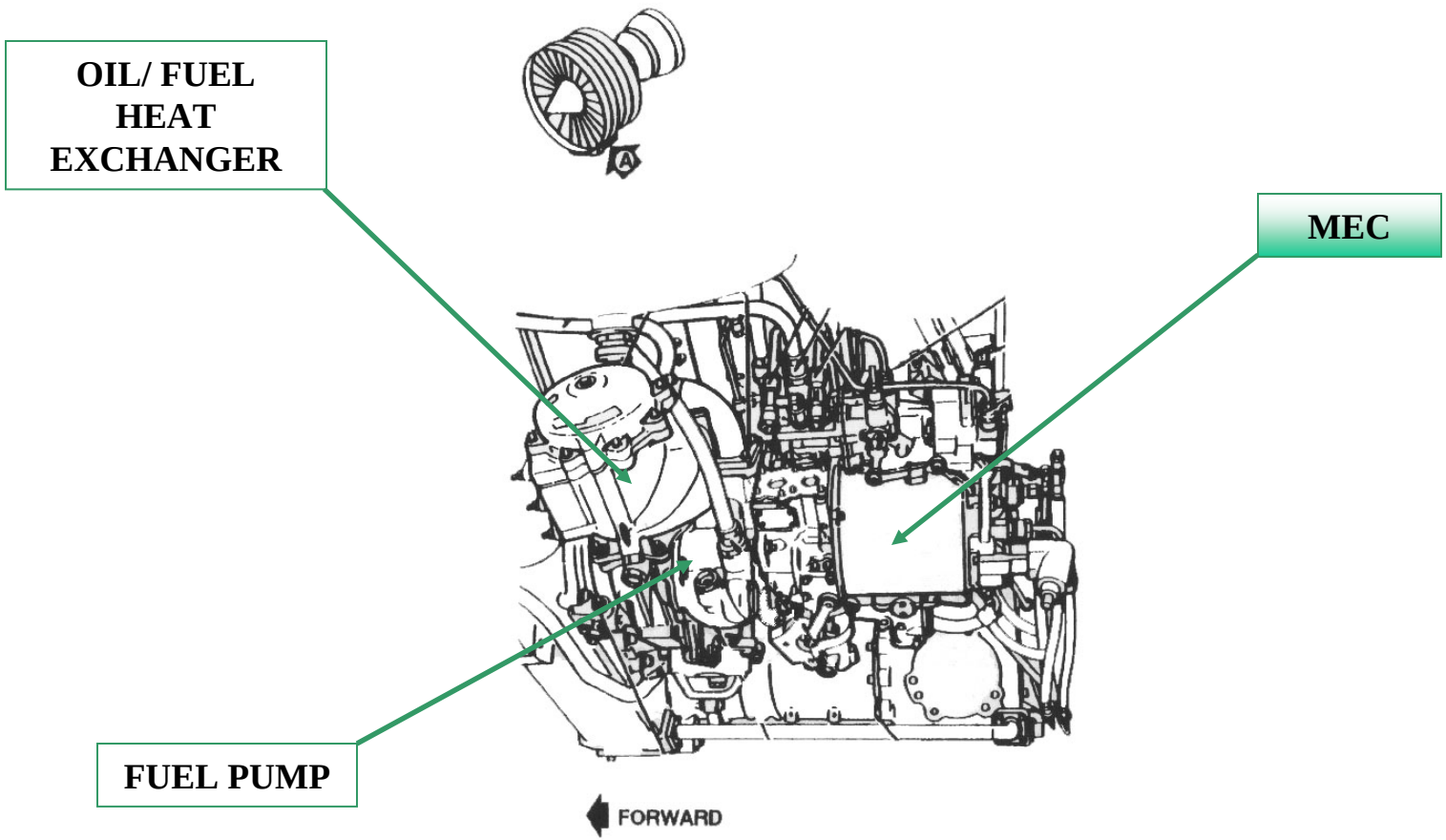

MEC OPERATION

- MEC is an Hydro mechanical device using fuel pressure to work.
- A device monitors fuel pressure at low flow conditions for MEC servo operation.

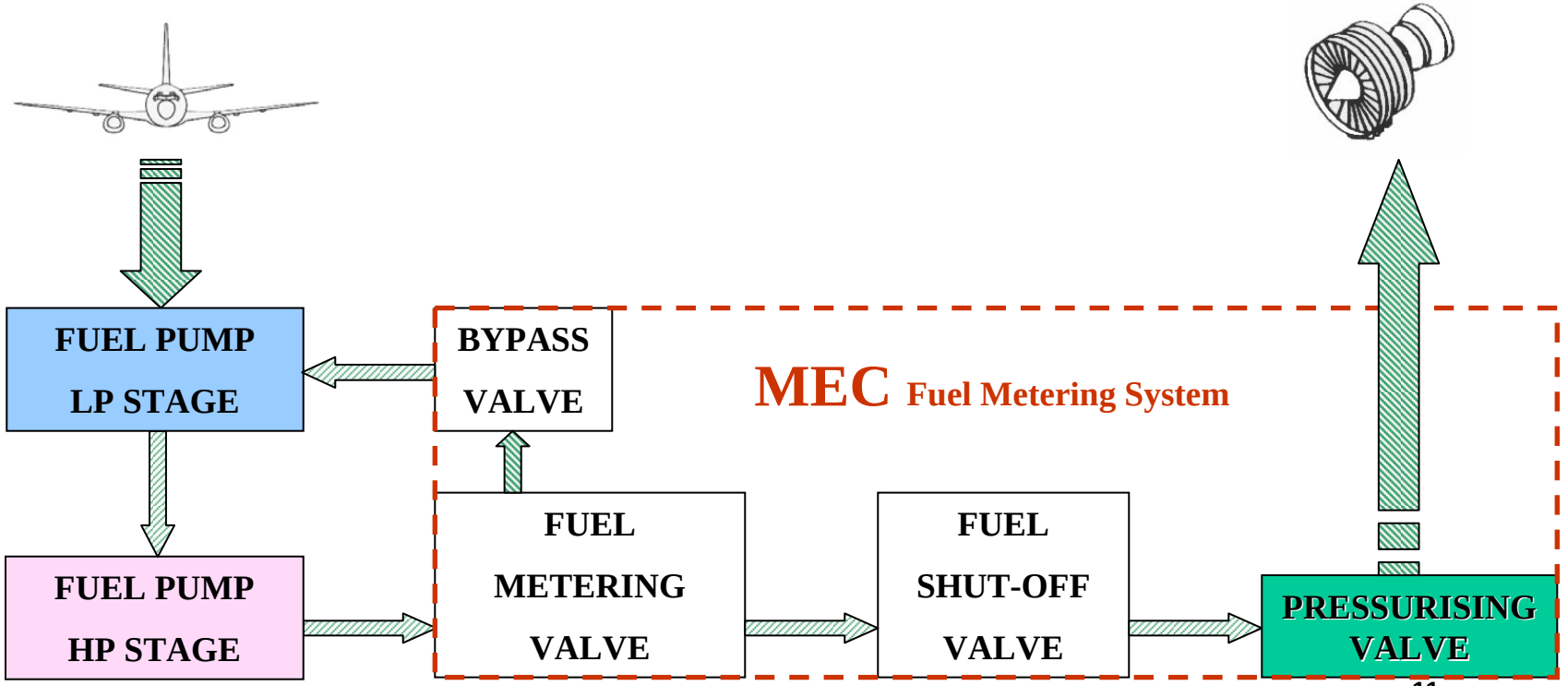

MEC PURPOSE

- The **MEC's** job is divided in 2 tasks:

MAIN TASKS:

– **Speed governing system**

– **Fuel limiting system**

– **Idling system**

ADDITIONAL TASKS:

Control functions to optimise engine performance

– **VBV**

– **VSV**

– **HPTCCV**

SPEED GOVERNING SYSTEM

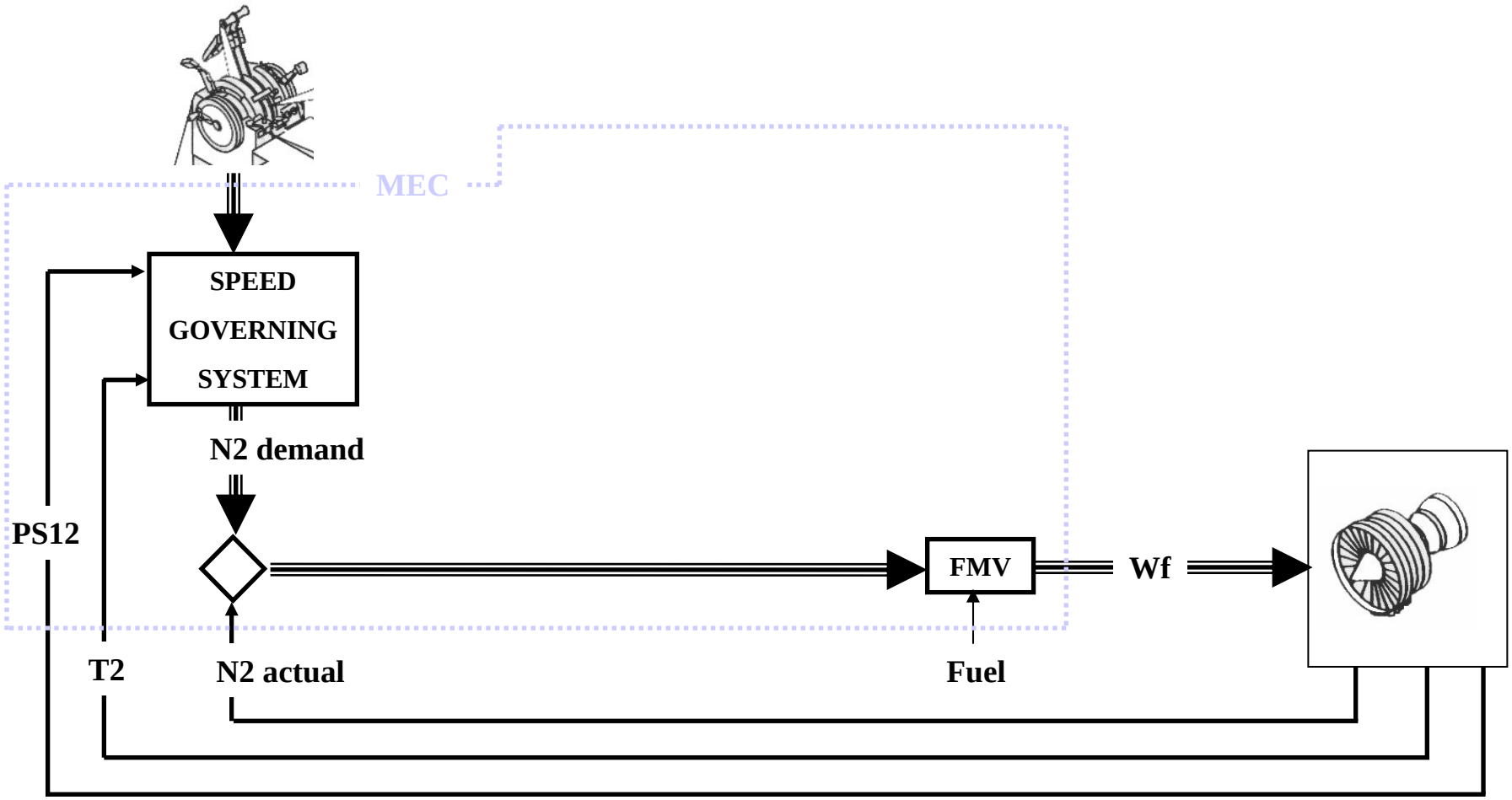

FUEL LIMITING SYSTEM

- During transient operation, the speed governing system could change the fuel flow beyond the safe limits.
- The purpose of the fuel limiting system is to define and impose correct engine fuel flow limits during rapid transients:

→ **ACCELERATIONS**

→ **DECELERATIONS**

→ **STARTS**

FUEL LIMITING SYSTEM (Cont'd)

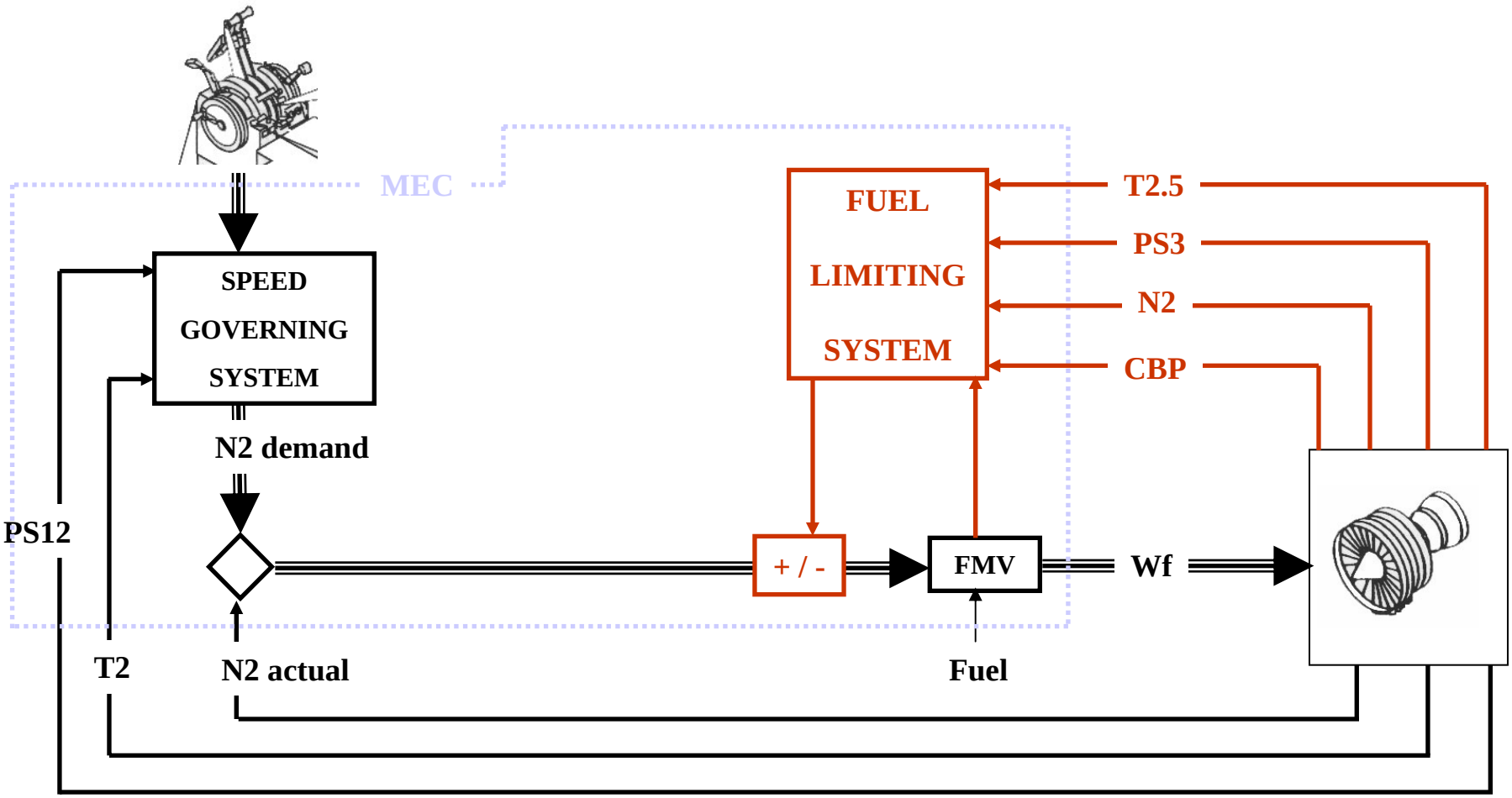

IDLING SYSTEM

HIGH IDLE:

- Used only when anti-icing is selected or if a flying aircraft has flaps configuration > 15°.
- It is optimised to provide rapid recovery of takeoff thrust if required.

LOW IDLE:

- *Ground idle:* Provide adequate taxi thrust while minimising noise, fuel consumption and braking effort
- *Flight idle:* Scheduled to minimise fuel consumption.

IDLING SYSTEM (Cont'd)

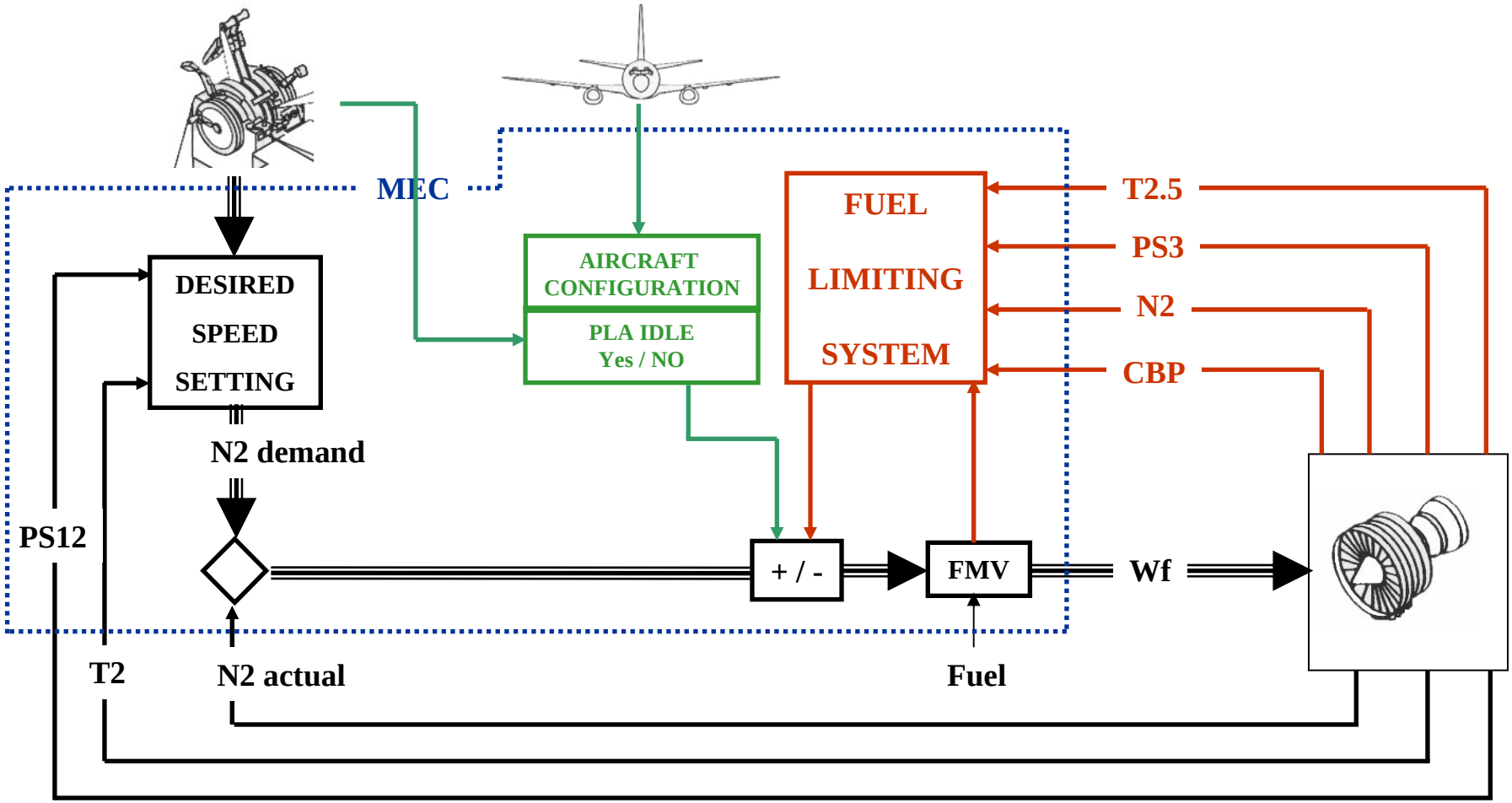

MEC ADDITIONAL TASKS

VBV SYSTEM

• VBV system positions 12 valves by hydraulic pressure acting upon a fuel gear motor.

• The fuel pressure is scheduled by the MEC.

• VBV feedback cable is positioned to provide the MEC with a current VBV position to compare with the desired position.

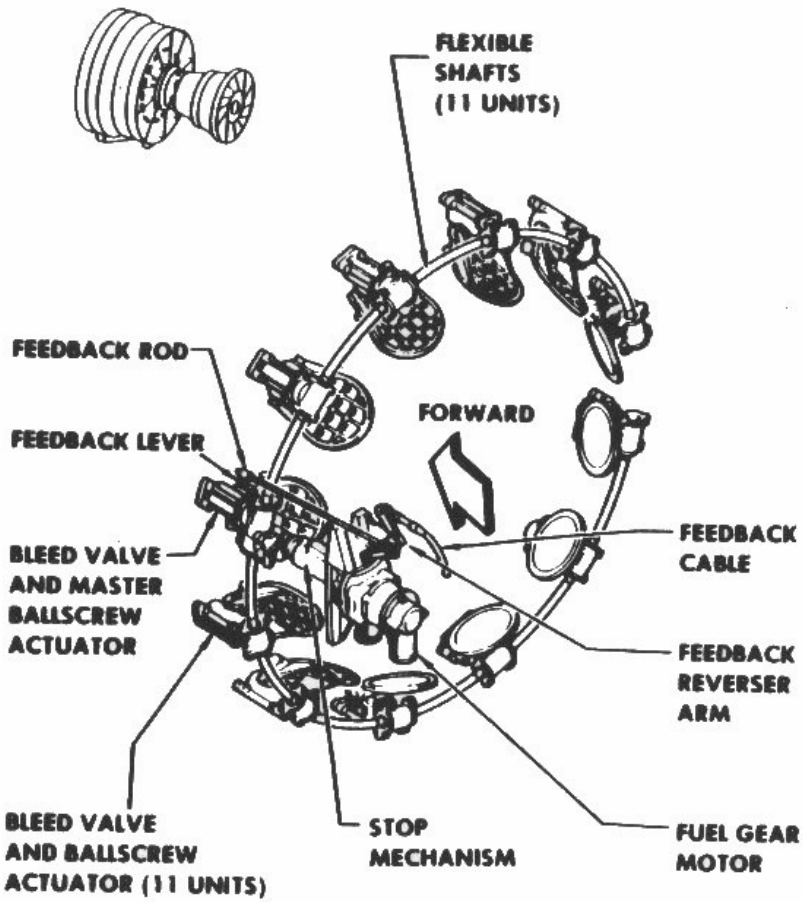

MEC ADDITIONAL TASKS (Cont'd)

VBV SYSTEM (Cont'd)

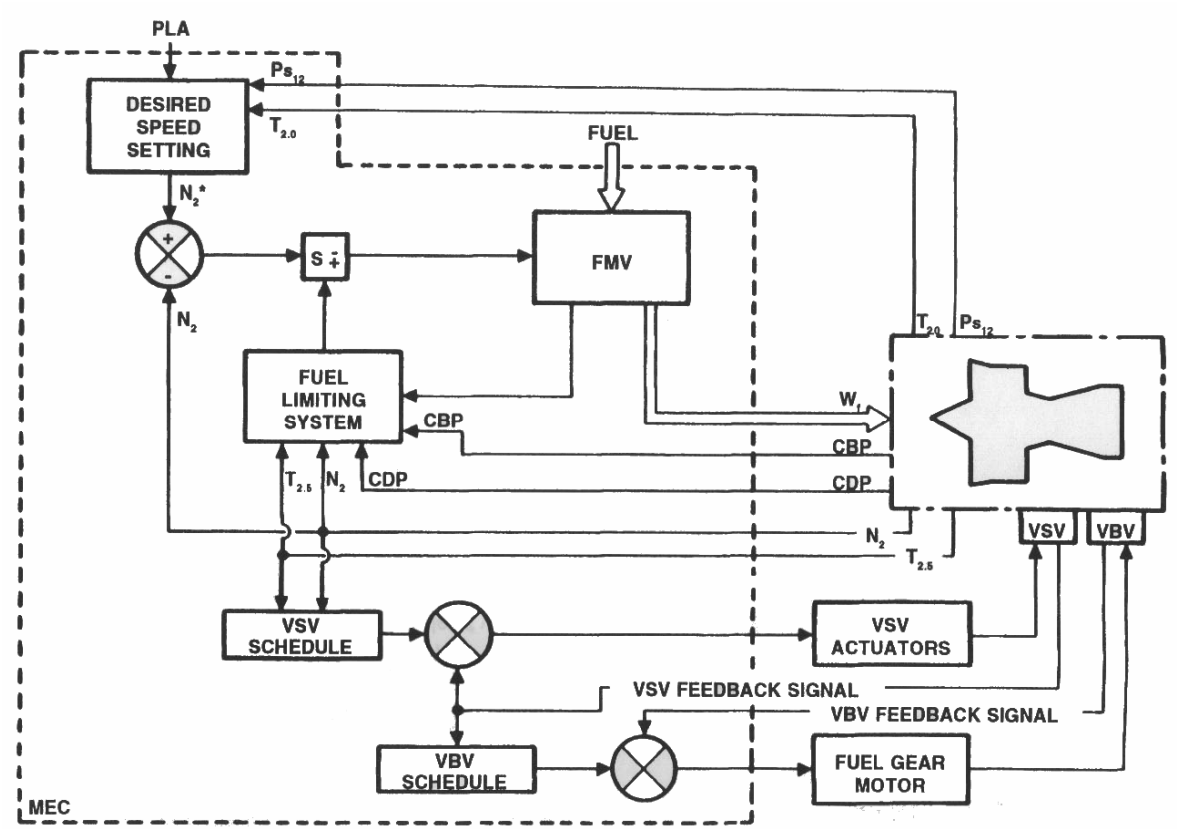

MEC ADDITIONAL TASKS (Cont'd)

VBV PURPOSE

As the **Compressor is optimised for ratings close to maximum power** engine operation has to be protected during deceleration or at low speed:

Without VBV installed:

At Deceleration or Low speed

$\Rightarrow$ *Booster Outlet Airflow* $\downarrow\downarrow$ *much more than Booster Pressure Ratio*

$\Rightarrow$ ***LPC stall margin reduced***

To re-establish a suitable mass flow **VBV** are installed on the contour of the primary airflow stream between booster and HPC to download booster exit.

With VBV installed:

At *Deceleration or Low speed*

$\Rightarrow$ *VBV fully open*

$\Rightarrow$ *Booster Pressure Ratio* $\downarrow\downarrow$ *but same Booster Outlet Airflow*

$\Rightarrow$ ***Plenty of LPC stall margin***

MEC ADDITIONAL TASKS (Cont'd)

VBV PURPOSE (Cont'd)

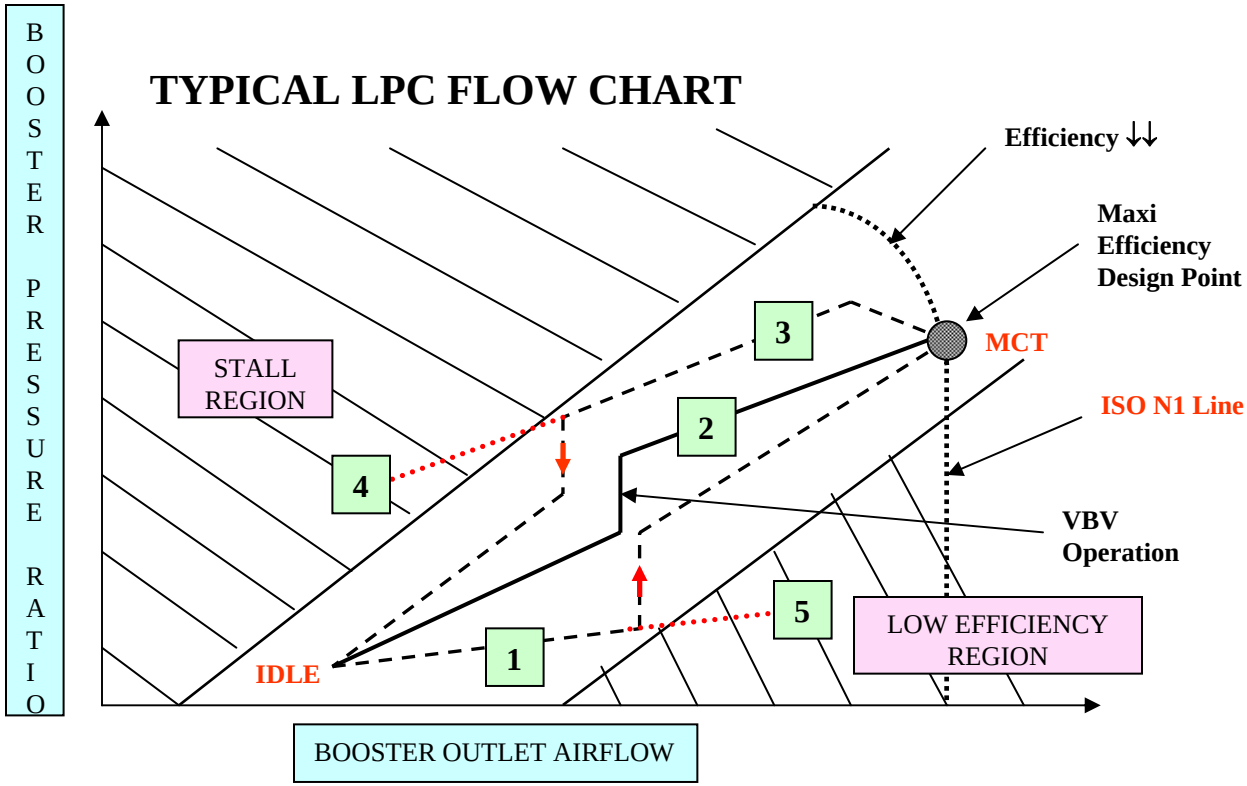

1	Acceleration Schedule
5	If VBV not closed
3	Deceleration Schedule
4	If VBV not open
2	Operating Line

- **Low speed or Deceleration ⇒ VBV OPEN**
- **High speed or acceleration ⇒ VBV CLOSED**

MEC ADDITIONAL TASKS (Cont'd)

VSV SYSTEM

- VSV system changes the angle of the HP Compressor IGV and N° 1,2 and 3 stator stages according to the **MEC** computation.
- **MEC** directs a resulting high pressure fuel flow to the dual VSV actuators.
- The actuators mechanically position the VSV.
- A feedback cable provides the VSV position to the **MEC**.
- A comparison is performed between schedule requirements and actual VSV position to determine the need to continue actuator control or not.

MEC ADDITIONAL TASKS (Cont'd)

VSV SYSTEM (Cont'd)

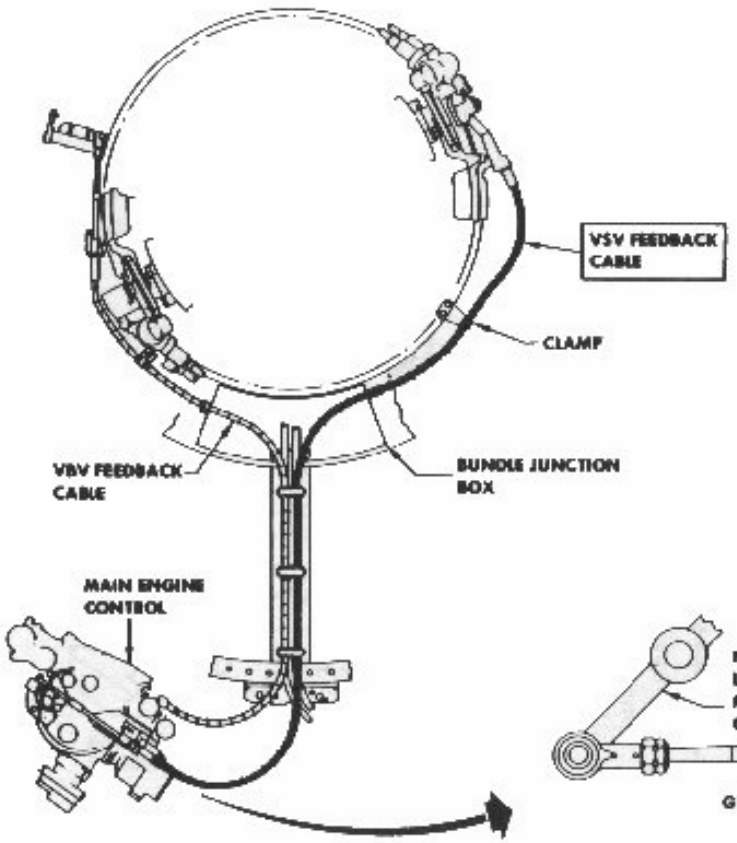

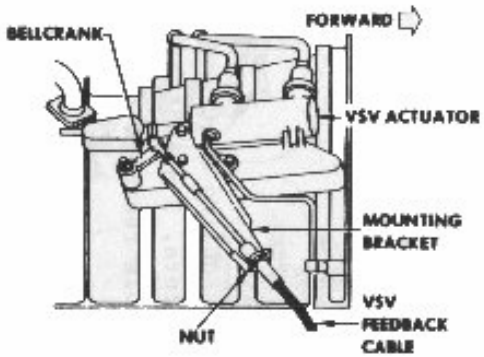

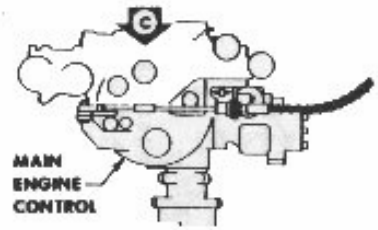

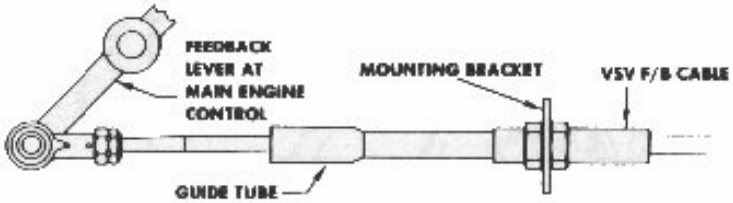

MEC ADDITIONAL TASKS (Cont'd)

VSV SYSTEM (Cont'd)

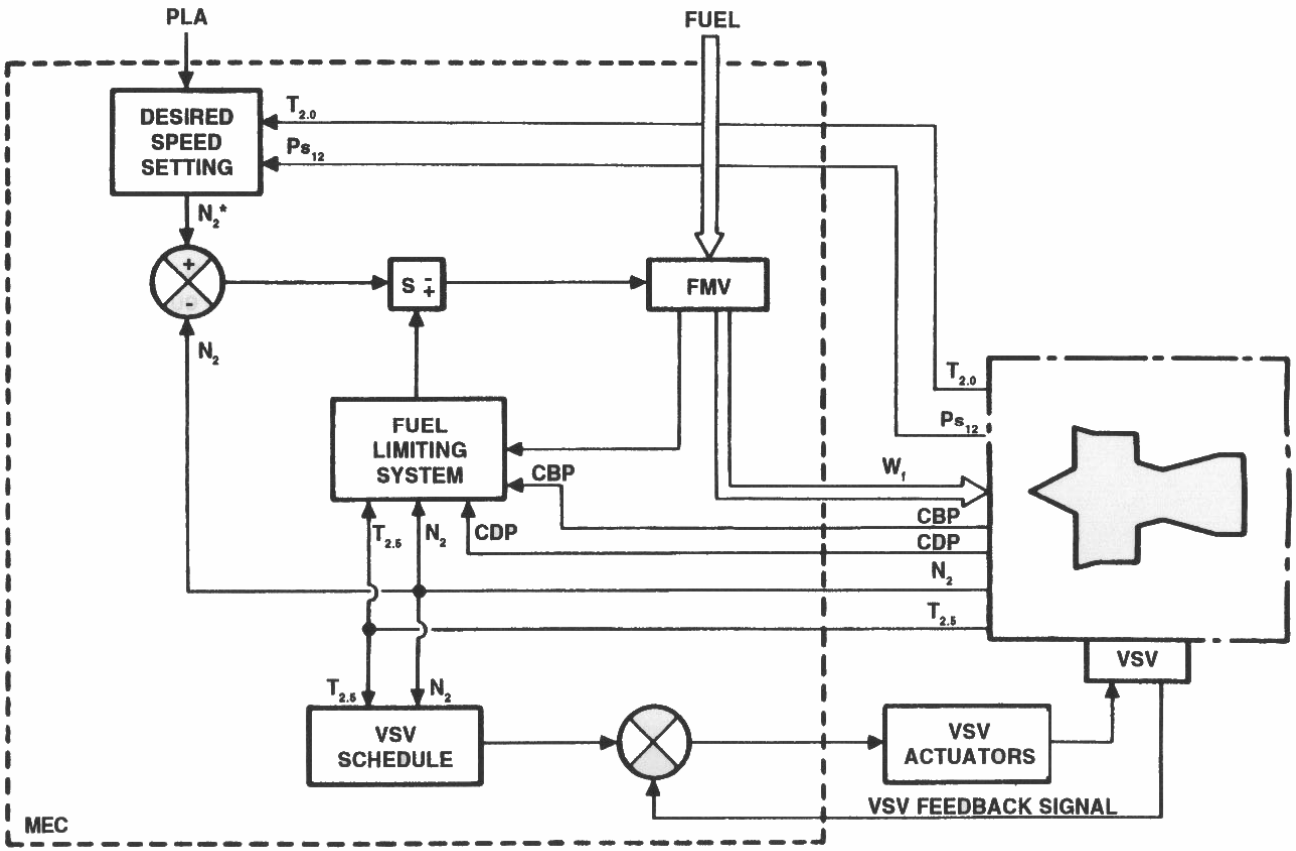

MEC ADDITIONAL TASKS (Cont'd)

VSV PURPOSE

- The **Compressor is optimised for ratings close to maximum power.**
- Engine operation has to be protected during **deceleration** or at **low speed**.
- **VSV** system position HPC Stator Vanes to the **appropriate angle of incidence**.

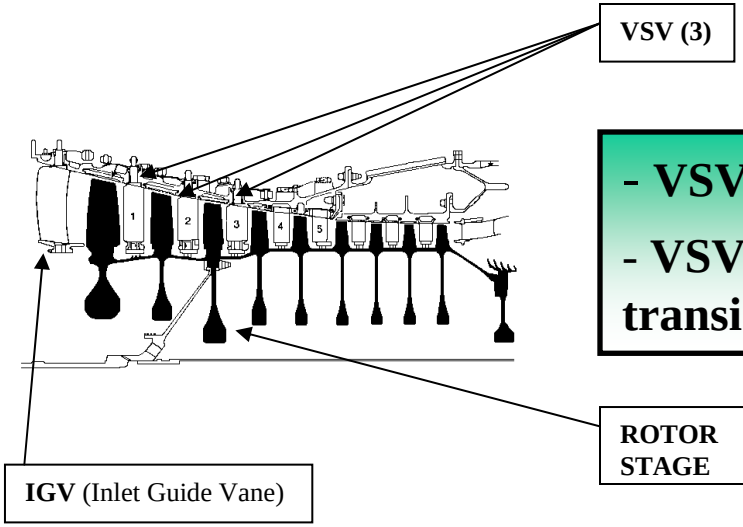

- VSV optimise HPC efficiency.

- VSV improve stall margin for transient engine operations.

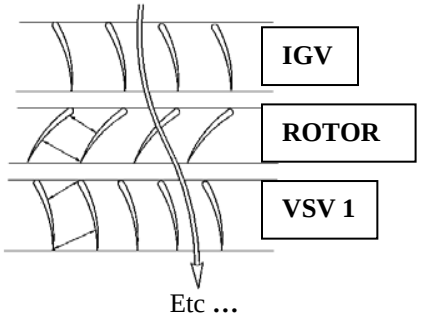

MEC ADDITIONAL TASKS (Cont'd)

VSV PURPOSE (Cont'd)

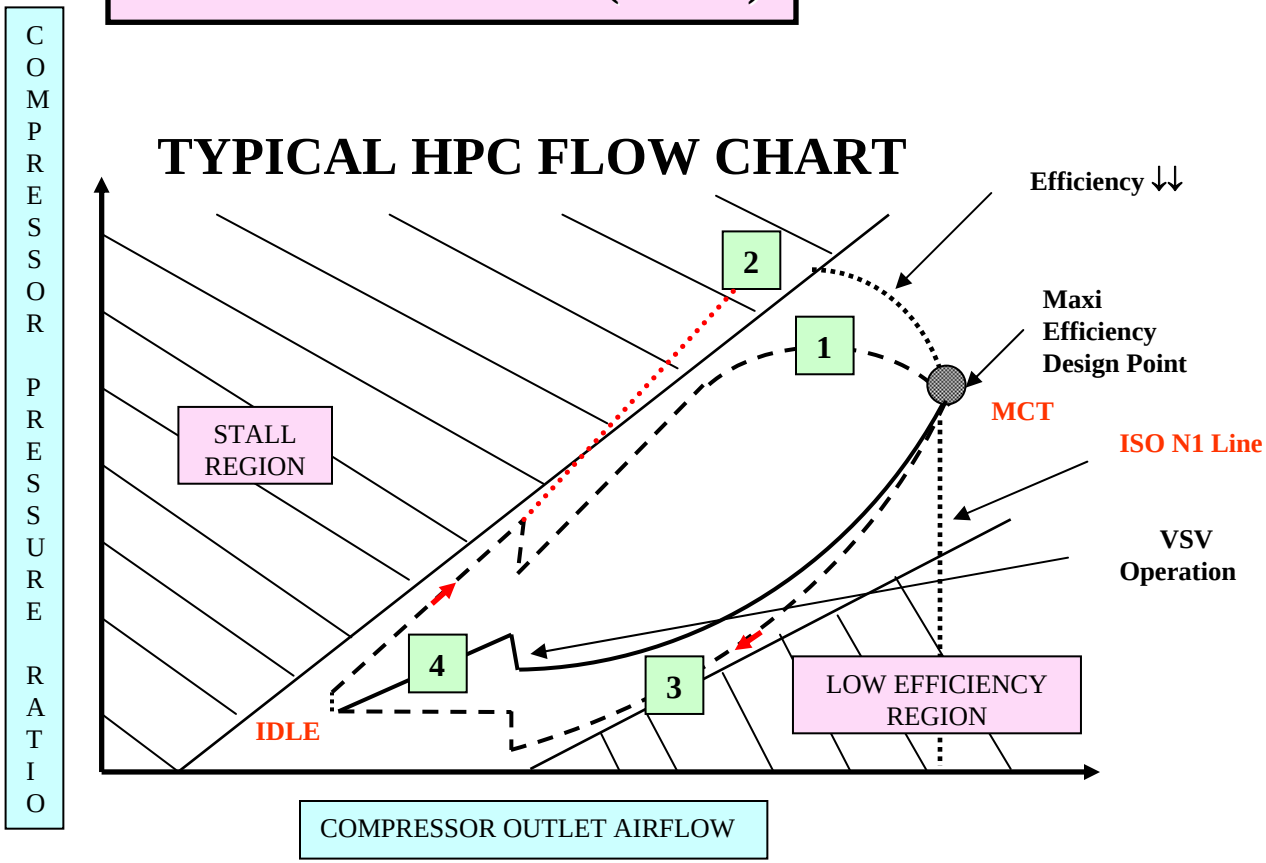

1 Acceleration Schedule

2 If VSV not open

3 Deceleration Schedule

4 Operating Line

- **Low speed or Deceleration ⇒ VSV CLOSED**
- **High speed or acceleration ⇒ VSV OPEN**

CLEARANCE CONTROL

• Operating **tip clearance** in the core engine are of primary importance. They determine:

<u>Steady state efficiencies:</u>
⇒ **Fuel consumption**

<u>Transient engine performance:</u>
⇒ **Peak gas temperature**
⇒ **Compressor stall margin**

CLEARANCE CONTROL (Cont'd)

- **Clearance Control** in the CFM56 engine is accomplished by a combination of 3 mechanical designs:

Passive control:
⇒ Using materials in the compressor aft case with low coefficient of thermal expansion.

Forced cooling:
⇒ Using Low Pressure Booster discharge cooling air for compressor and turbine.

Automatic control:
⇒ HPTCC VALVE and HPTCC TIMER are used to control the tip clearance between HPT blades and stationary tip shrouds.

HPTCCV ACTUATION

- **Automatic Control** is using Bleed Air from 5Th and 9Th stages of HPC to either cool or heat the HPT shroud.

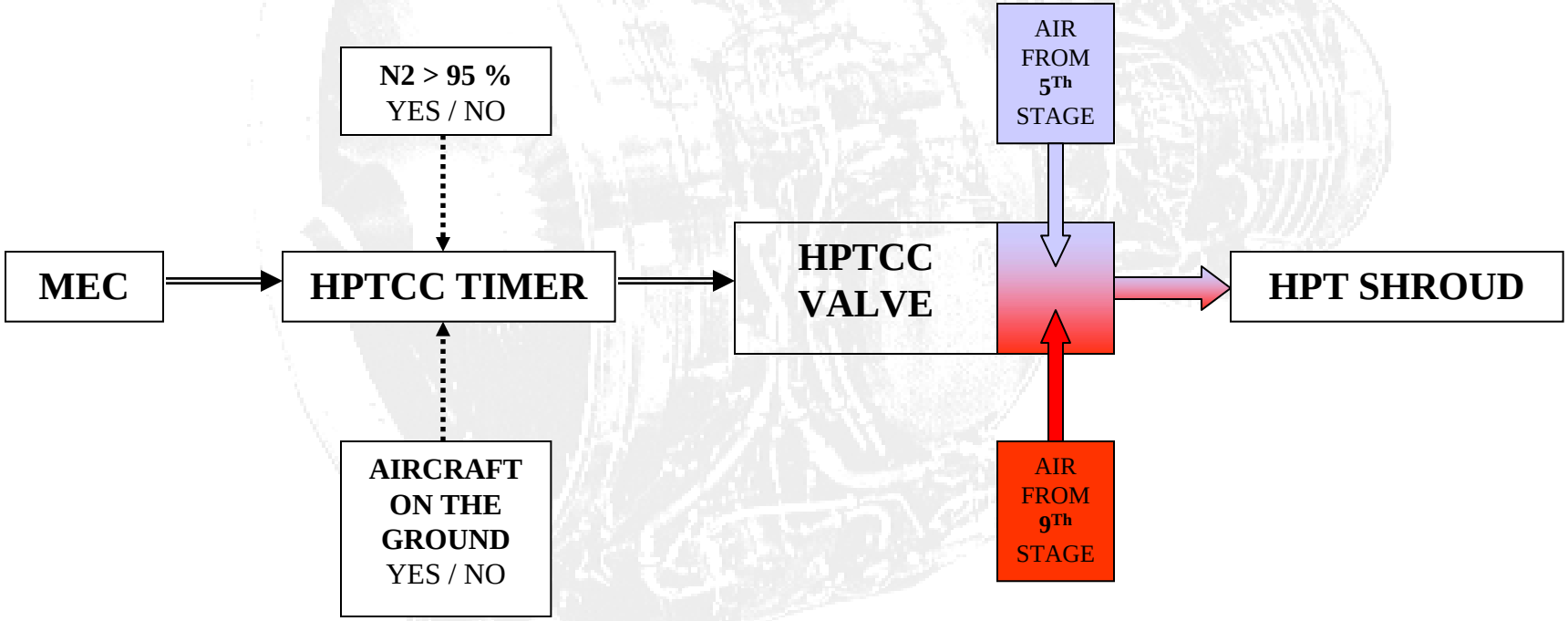

HPTCCV ACTUATION (Cont'd)

- **During flight:**

- Air selection is determined by fuel pressure signals sent from the **MEC** to the TIMER.

- The TIMER sends fuel pressure signals **without change** to actuate the HPTCC VALVE.

- The selected bleed air is ducted to a manifold surrounding the HPT SHROUD.

HPTCCV ACTUATION (Cont'd)

- **<u>During takeoff:</u>**

- The **TIMER** overrides the normal MEC operation of the valve.

- It is sequencing a transient air schedule over a specified time period to maintain a more nearly constant HPT blade tip clearance during the period of HPT Rotor/Stator thermal stabilisation.

- This maintain Turbine efficiency and decreases transient EGT overshoot.

- A lockout valve permits the TIMER to actuate only once per engine cycle. (i.e. from start to shut down)

HPTCCV ACTUATION (Cont'd)

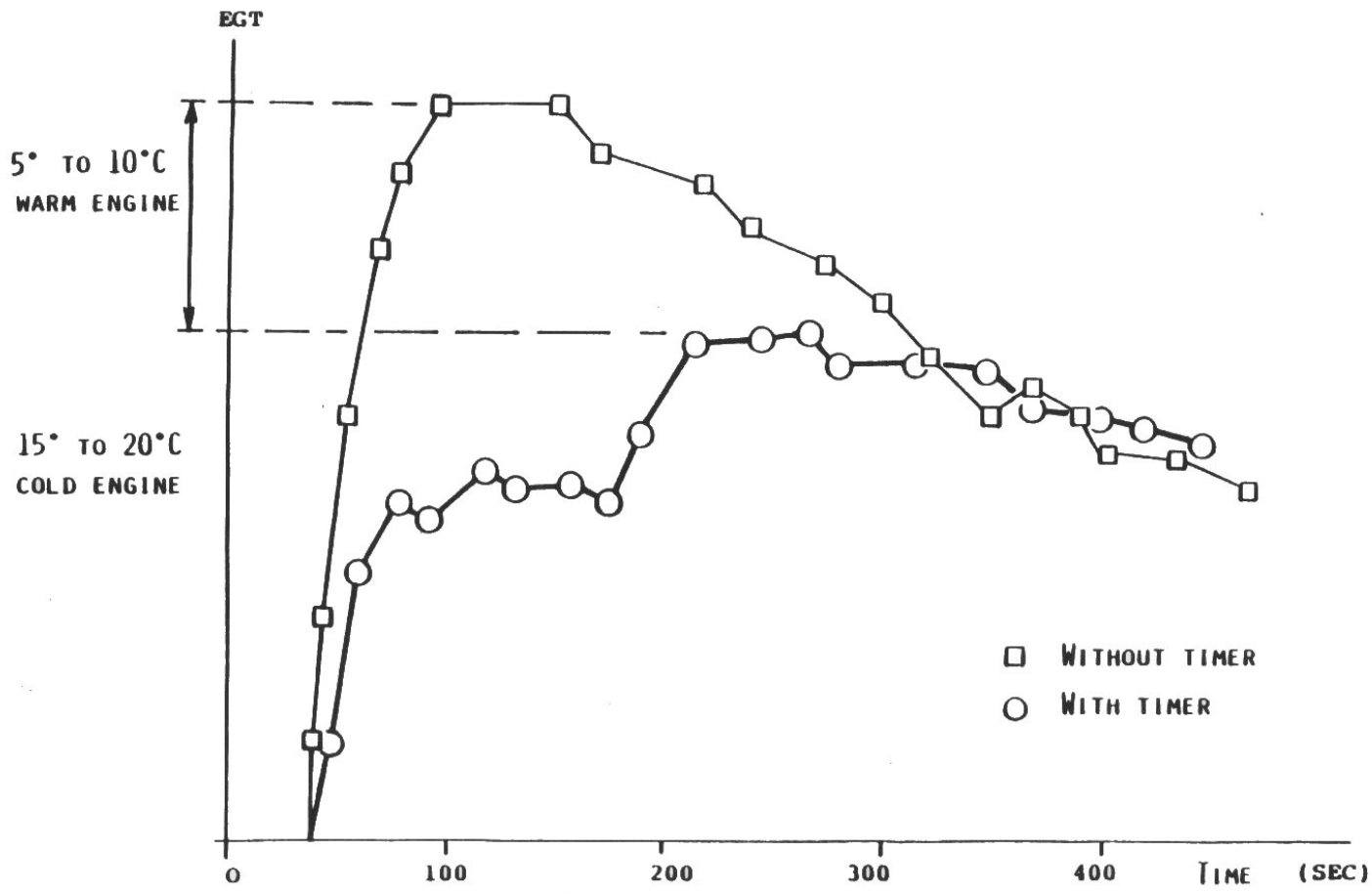

HPTCCV ACTUATION (Cont'd)

- **<u>The TIMER SEQUENCE:</u>**

  - *Starting Reference Point is when the engine reach **95 % N2**.*

  - *Then:*

    0 to 8 s ⇒ No air

    8 to 152 s ⇒ 5^{Th} stage air

    152 to 182 s ⇒ 5^{Th} + 9^{Th} stage air

HPTCCV ACTUATION (Cont'd)

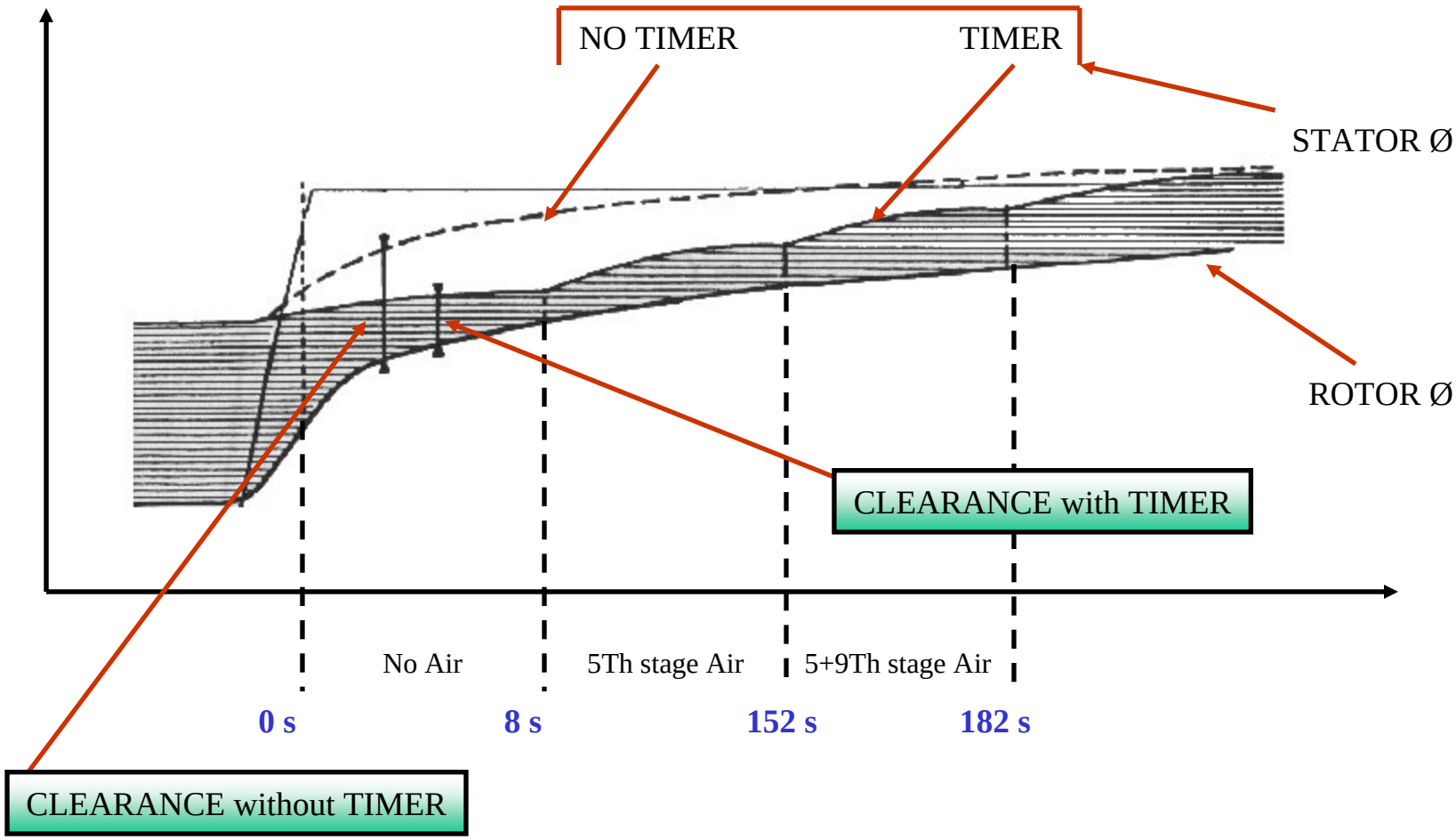

PMC

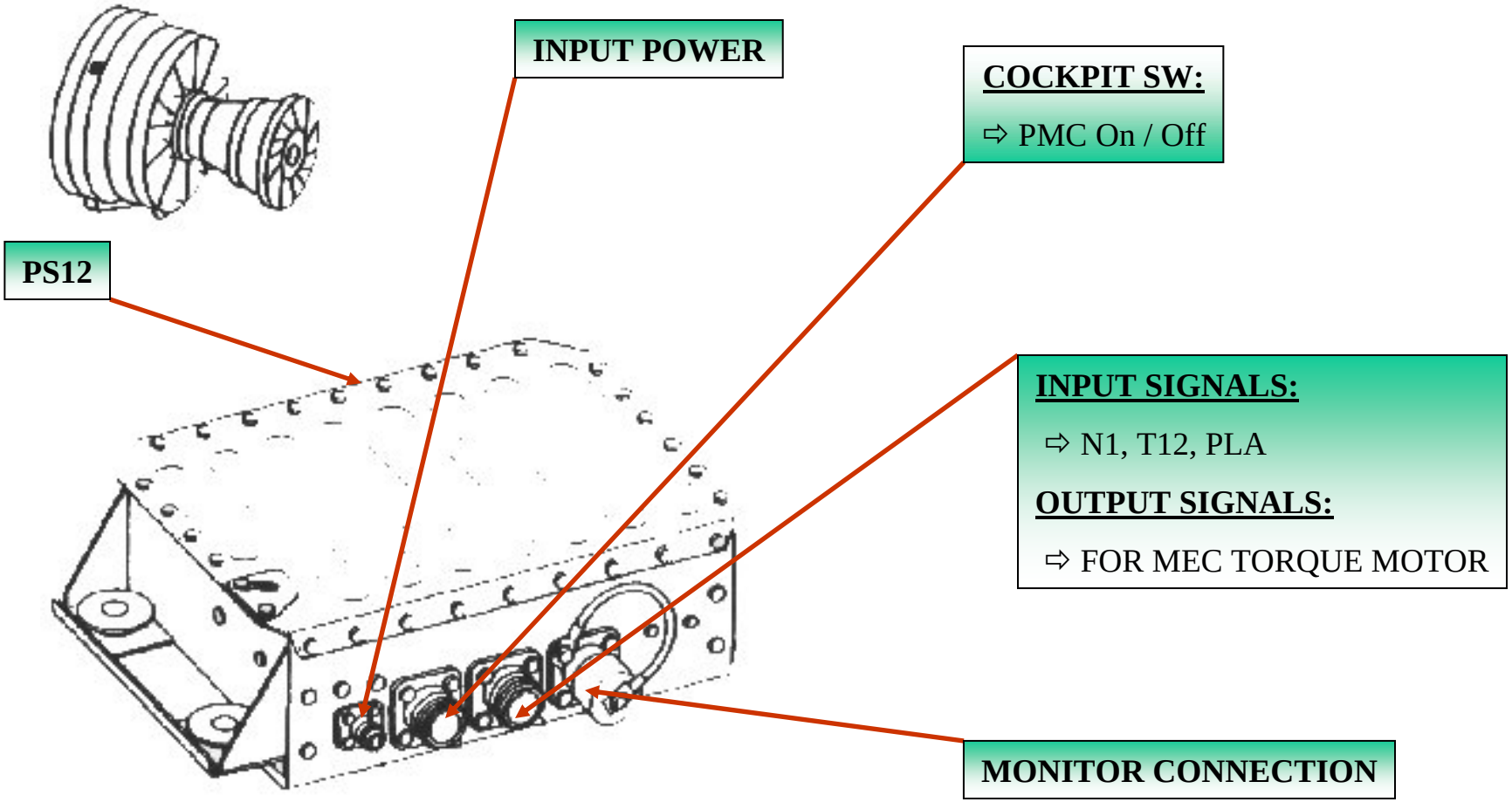
INPUT POWER
COCKPIT SW:
⇨ PMC On / Off
PS12
INPUT SIGNALS:
⇨ N1, T12, PLA
OUTPUT SIGNALS:
⇨ FOR MEC TORQUE MOTOR
MONITOR CONNECTION

PMC PURPOSE

- In a high bypass engine, total thrust is more accurately controlled by controlling N1 speed.

FAN is 80% of the POWER !

This is accomplished by
varying N2 speed
to reach the
accurate N1 speed.

PMC OPERATION

- The main goal of the PMC is to make **pilot's job more comfortable.**

- <u>PMC is performing automatically 3 corrections:</u>

→ **N1** Vs **ALTITUDE**

→ **N1** Vs **PRESSURE**

→ **N1** Vs **TEMPERATURE**

PMC OPERATION (Cont'd)

N1 Vs ALTITUDE

- As the **altitude is increasing**, if you want to keep a steady thrust %, you need to **increase N1**.

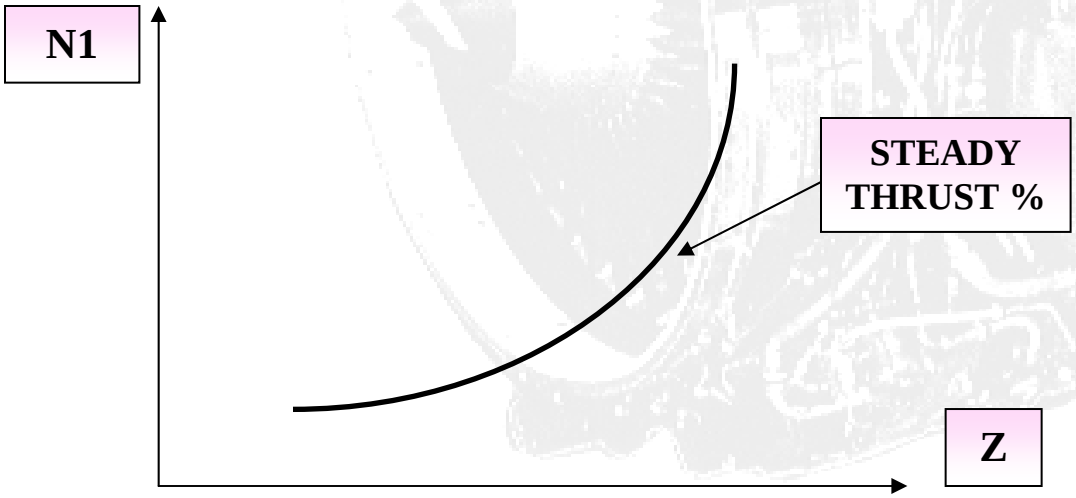

PMC ON
PMC increase N1

⇒ PLA remain unchanged.

PMC OFF
The PILOT must increase N1
⇒ PLA change.

PMC OPERATION (Cont'd)

N1 Vs PRESSURE

- As the **pressure is decreasing**, if you want to keep a steady thrust %, you need to **increase N1**.

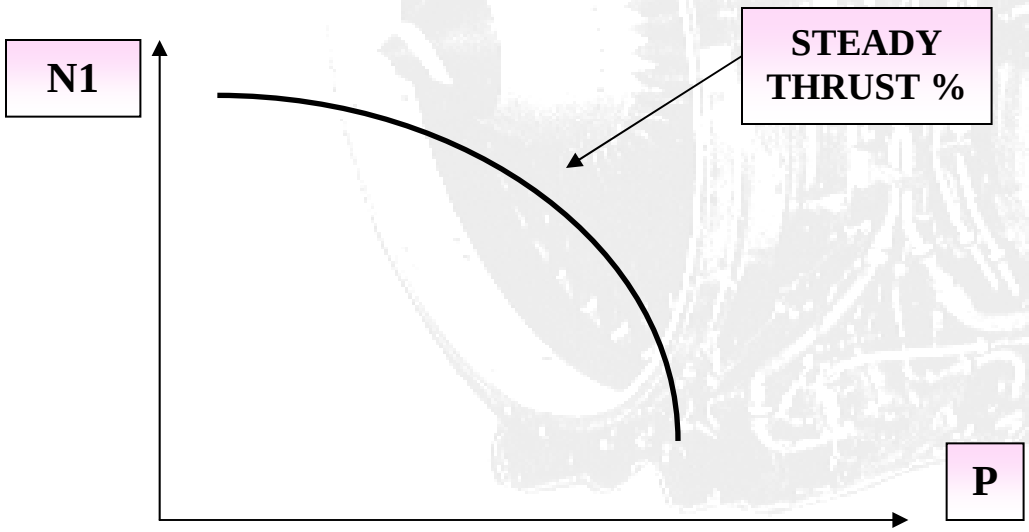

PMC ON
PMC increase N1

⇒ PLA remain unchanged.

PMC OFF
The PILOT must increase N1
⇒ PLA change.

PMC OPERATION (Cont'd)

N1 Vs TEMPERATURE

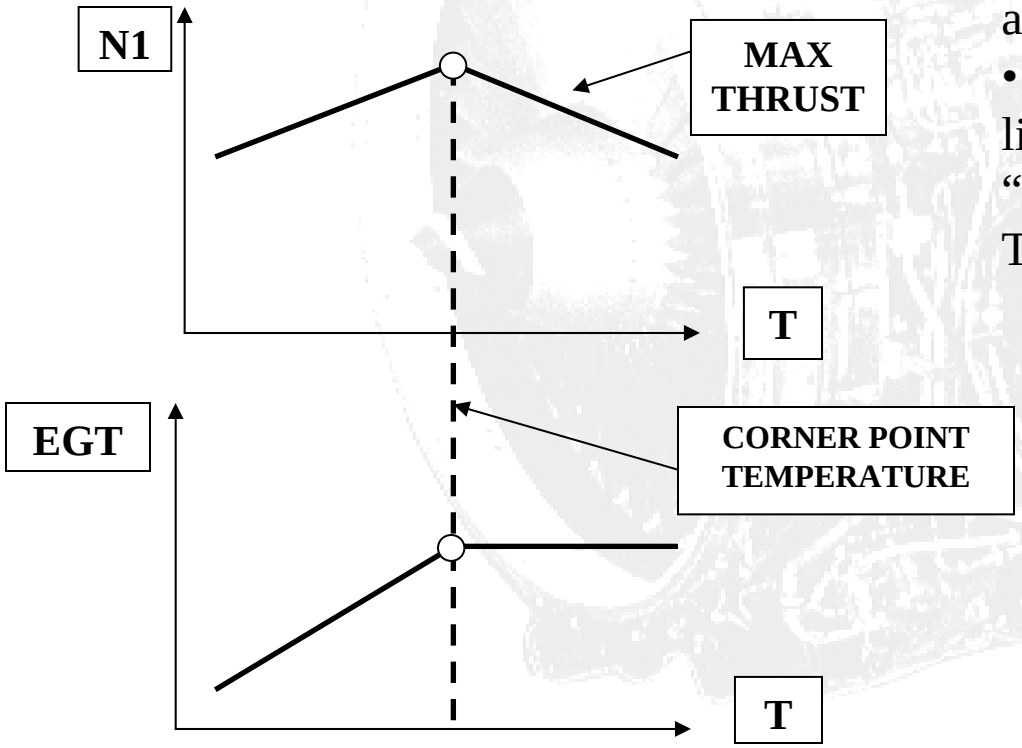

- At takeoff, to get the max thrust (flat rated thrust) as temperature increases, N1 and EGT must also increase.
- But mechanical limitations impose a limit which is a temperature called: "Corner Point" or "Flat Rated Temperature".

Beyond it:

PMC ON
PMC is limiting **N1** and **EGT**

PMC OFF
The **PILOT** must limit **N1** and **EGT**

PMC OPERATION (Cont'd)

- **PMC** efficiency start at **50% N1** and is fully efficient at or above **70% N1**.

- **PMC trims MEC** to maintain the commanded thrust

- **Schedule N1 is compared to actual N1**.The error signal generates from the PMC an Output Current (TMC) to a torque motor mounted on the MEC.
The torque motor changes **Fuel Flow** (Wf).
⇨ N2 and N1 change.

PMC OPERATION (Cont'd)

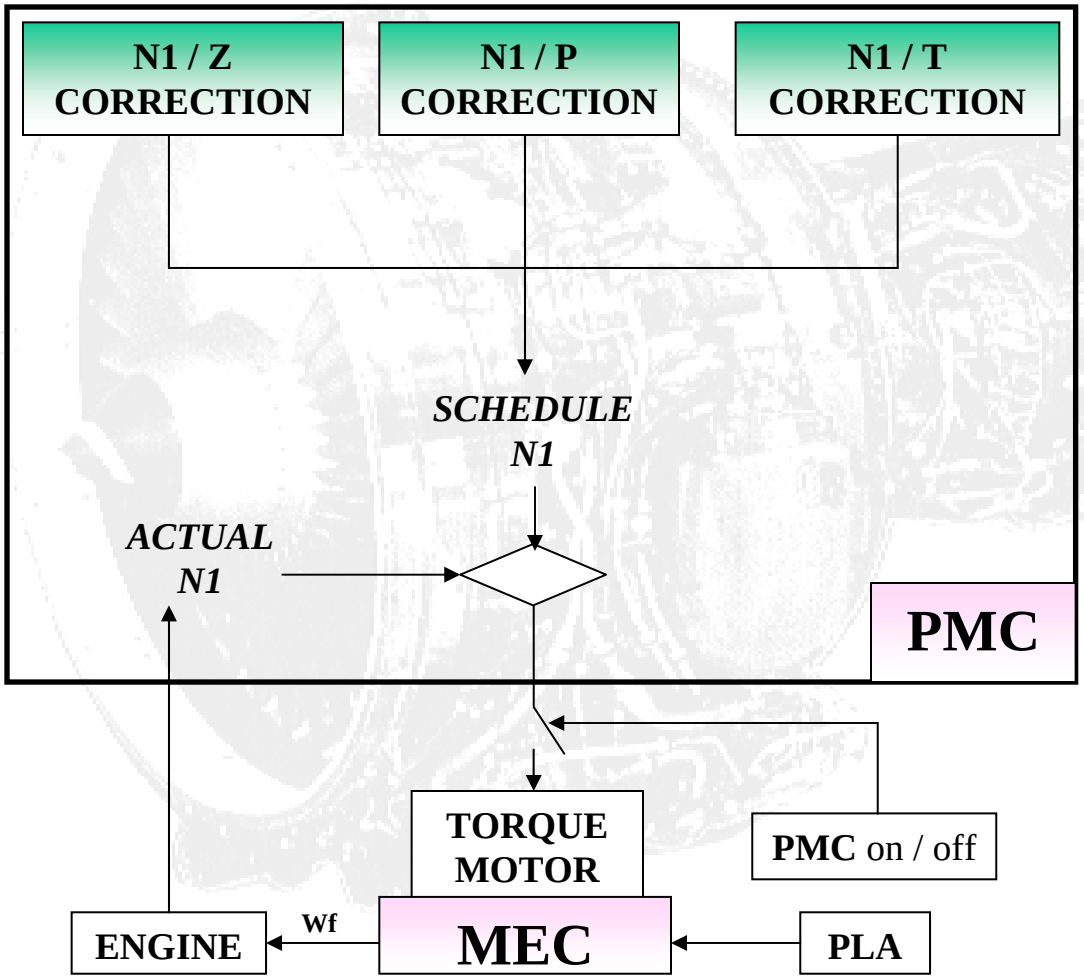

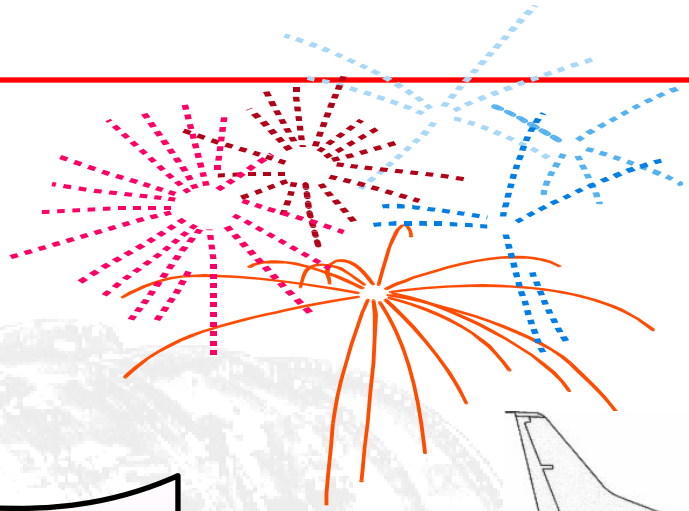

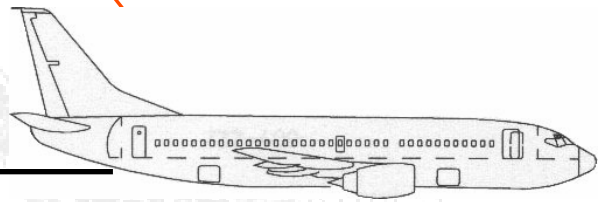

THE END

THANKS FOR YOUR ATTENTION !