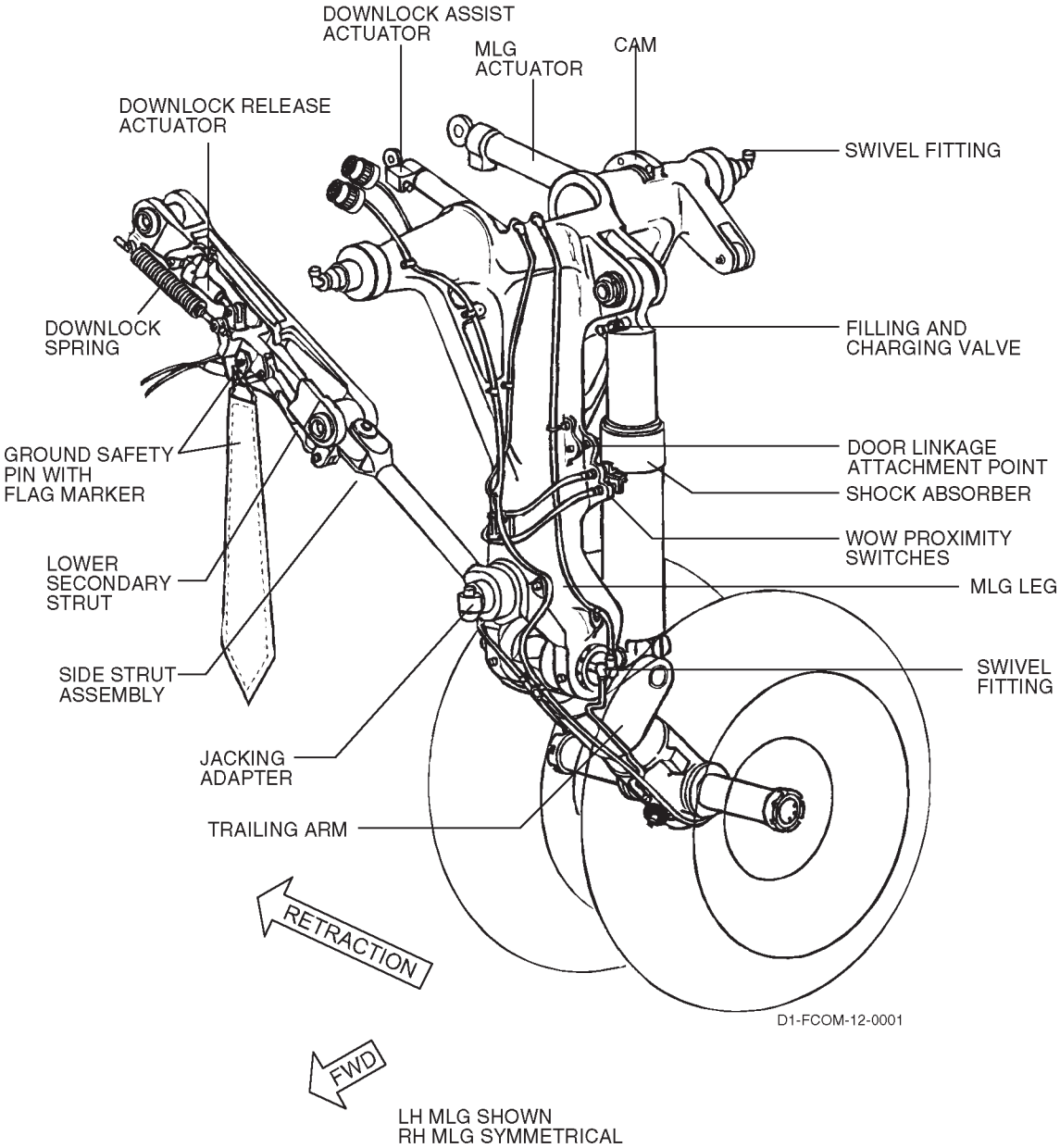

Main Landing Gear Assembly (LH Side Shown)

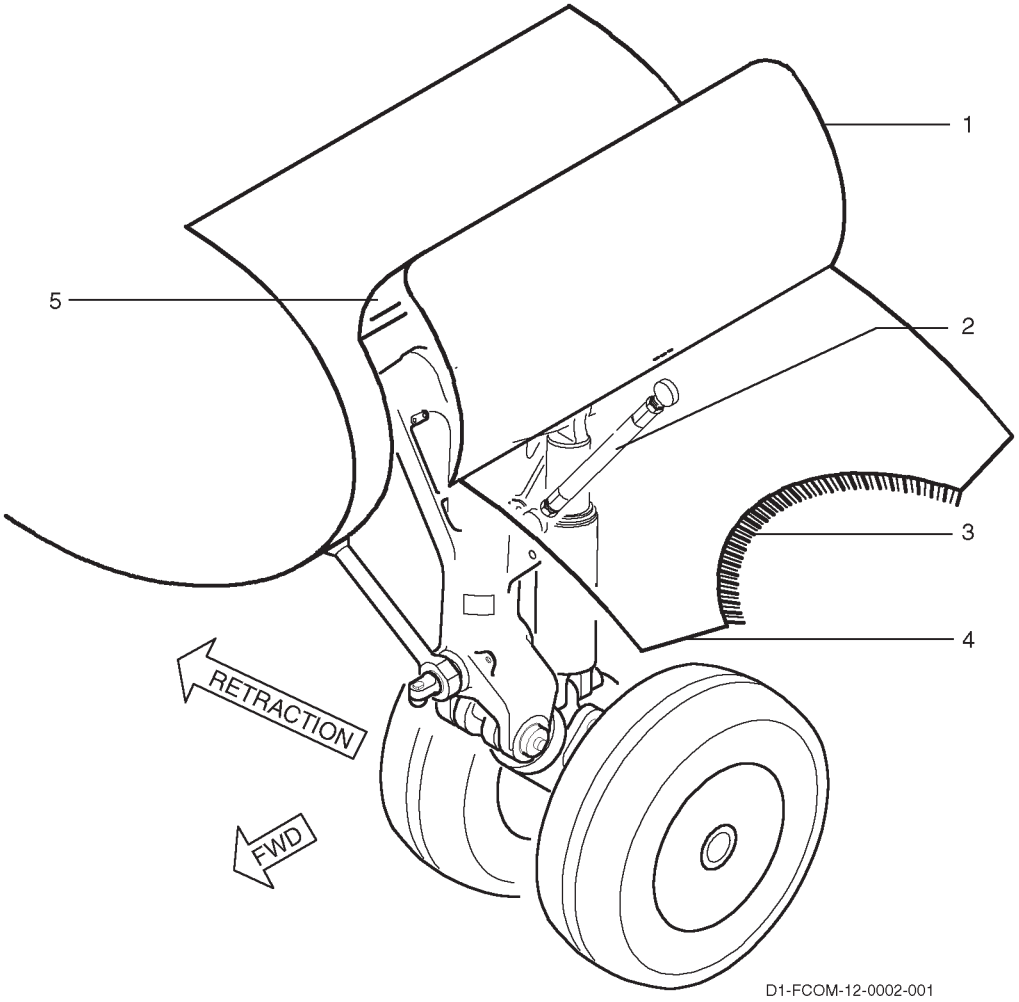

Main Gear Door Assembly (LH Side Shown)

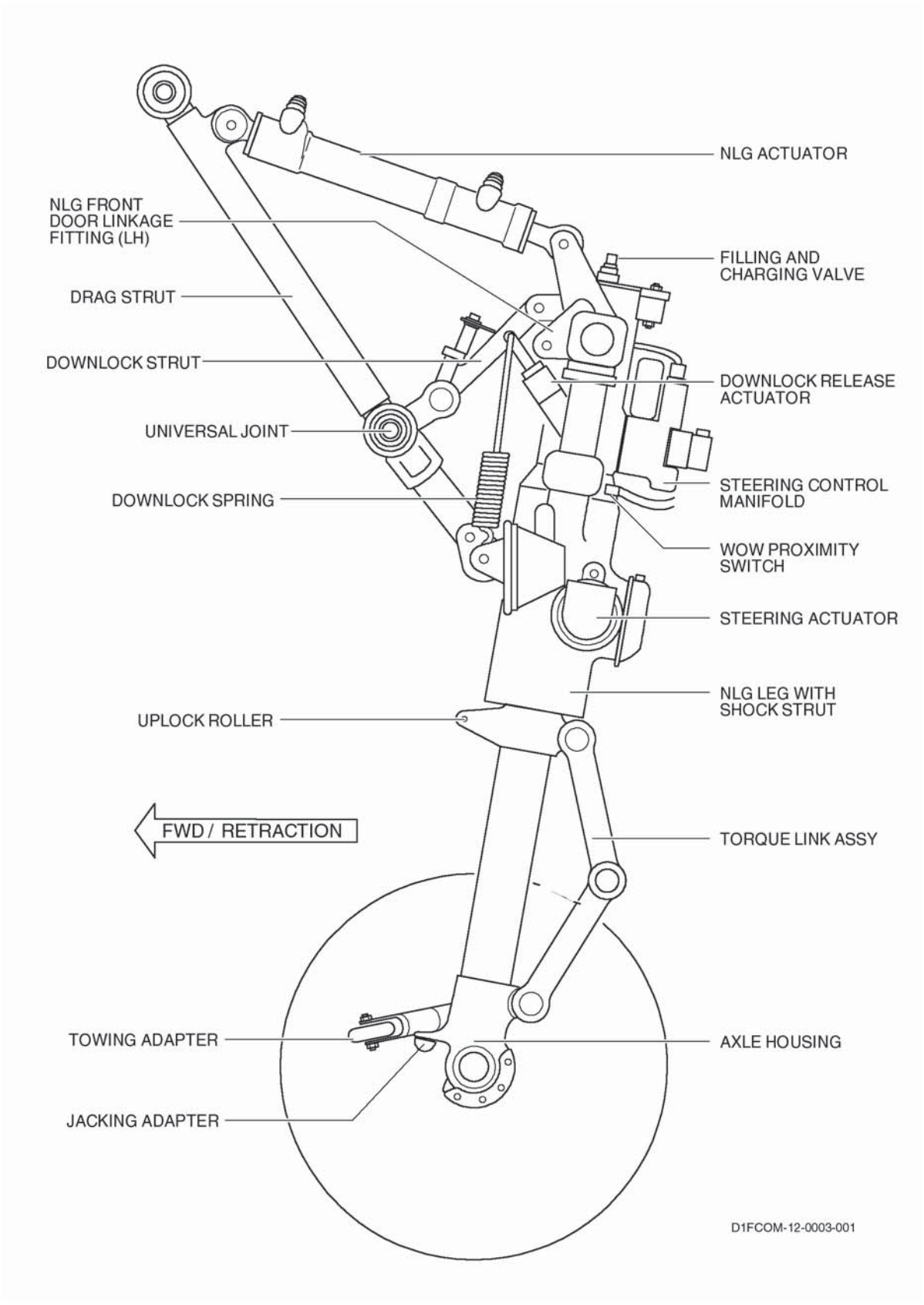

Nose Landing Gear Assembly

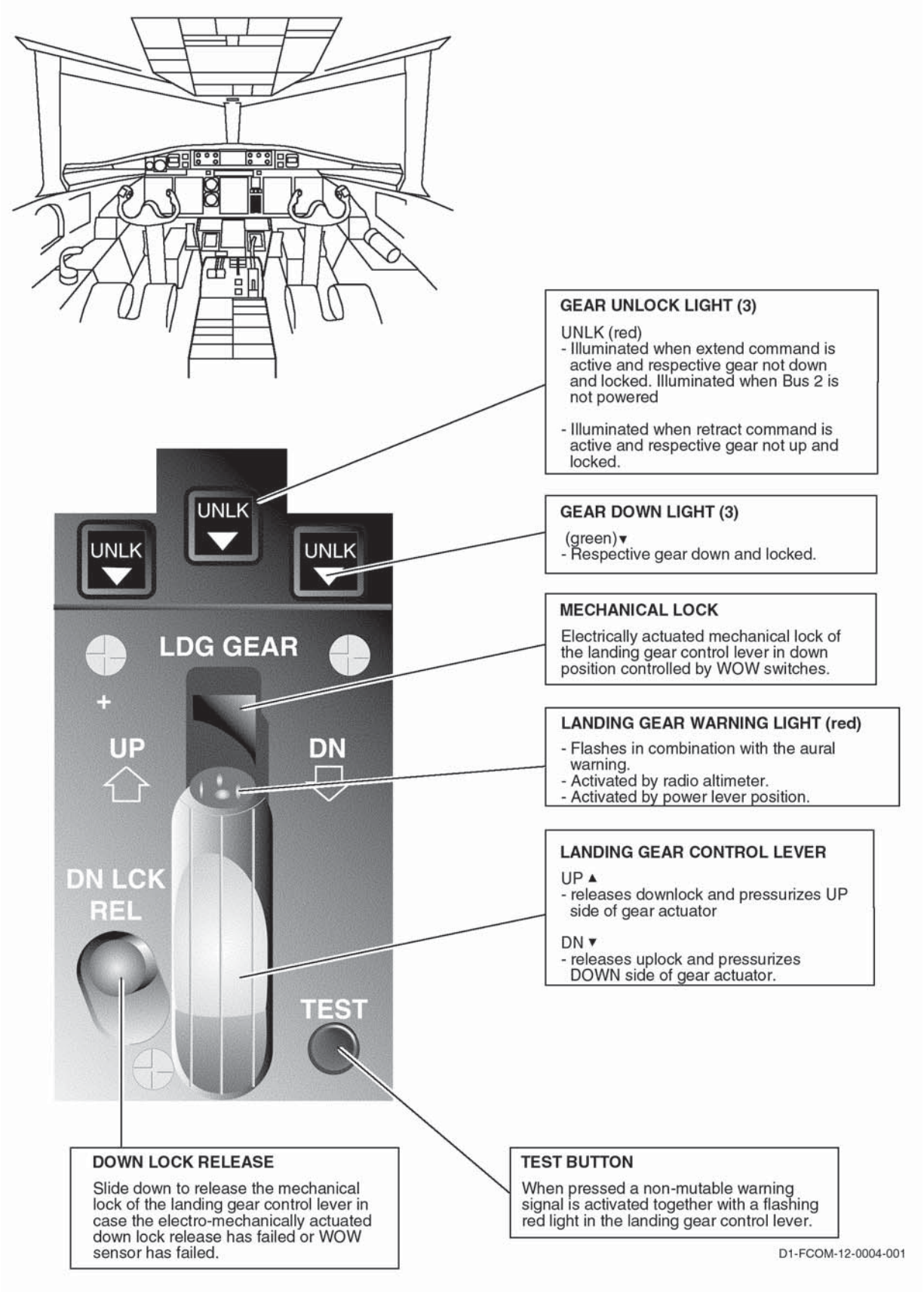

Landing Gear Control Lever

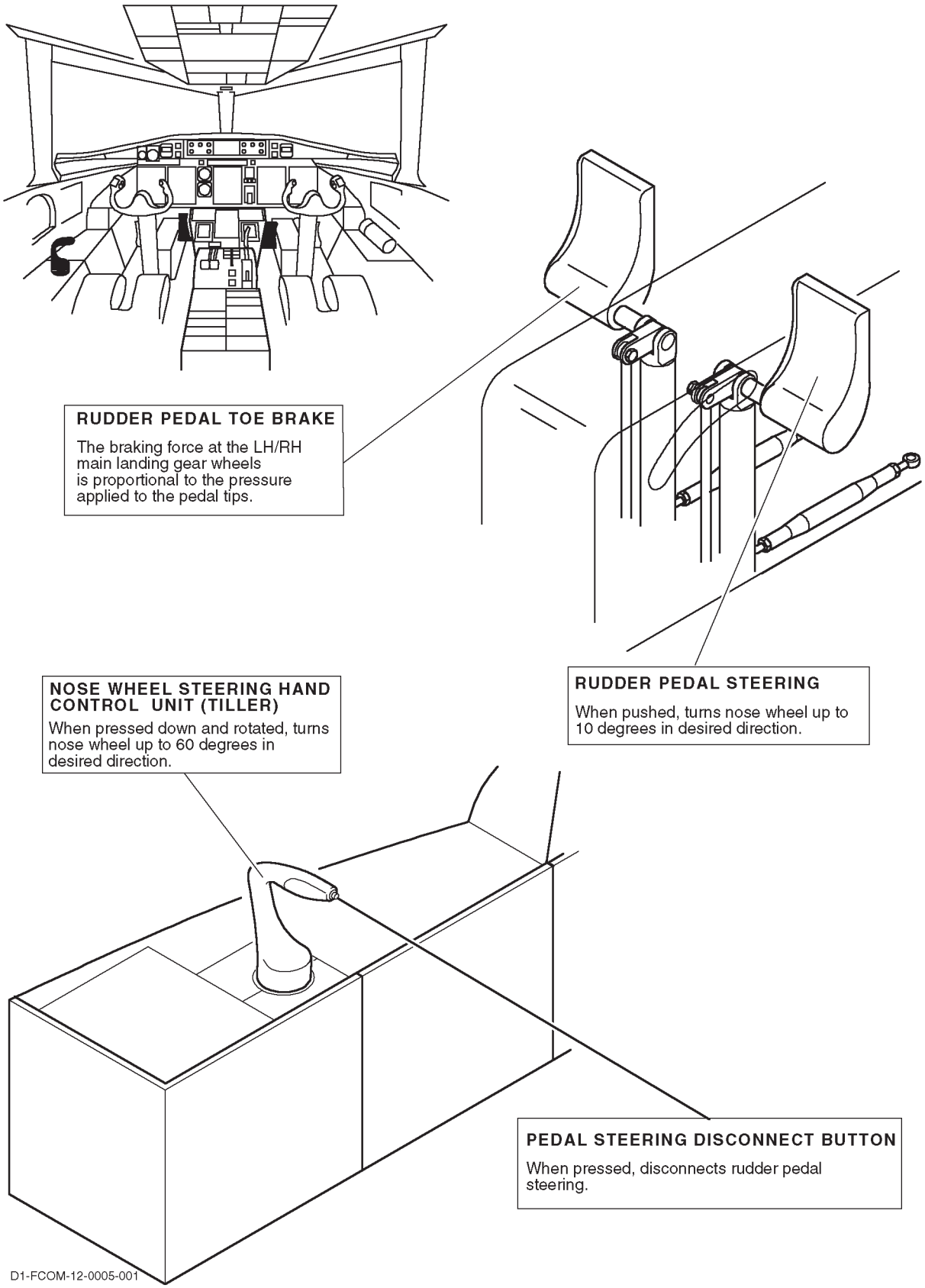

Nose Wheel Steering/Brakes

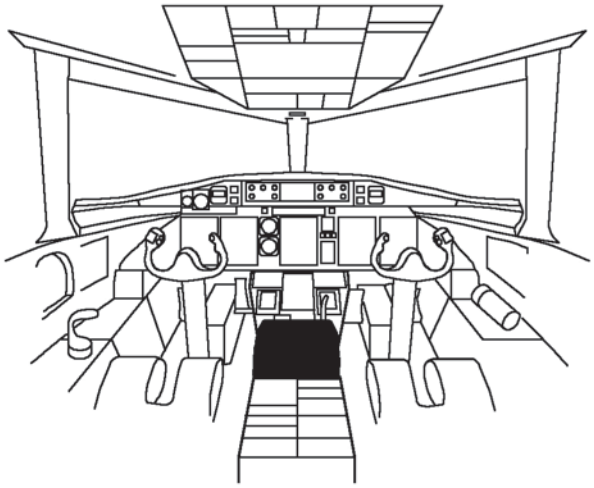

EMERGENCY EXTENSION LEVER:

When PULLED fully aft, results in an emergency extension of the main and nose landing gear.
If the lever has been pulled, do not return it to the forward position.

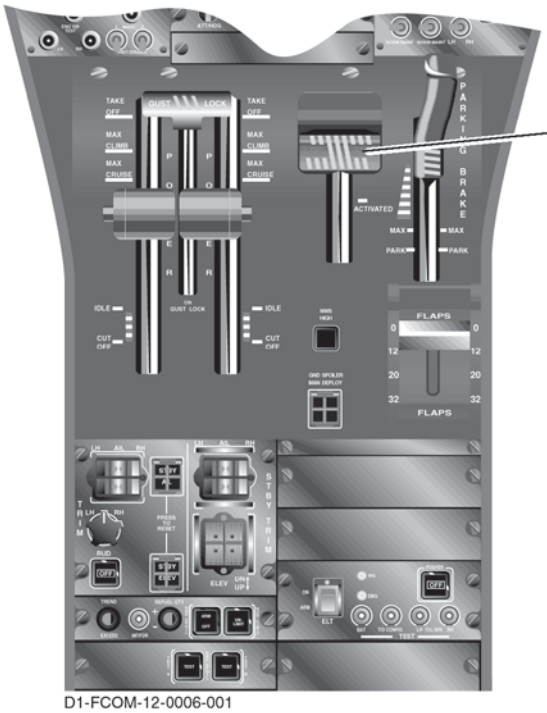

Emergency Extension Lever

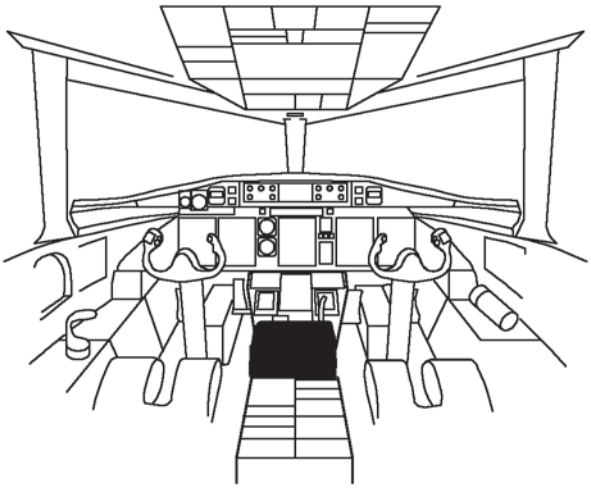

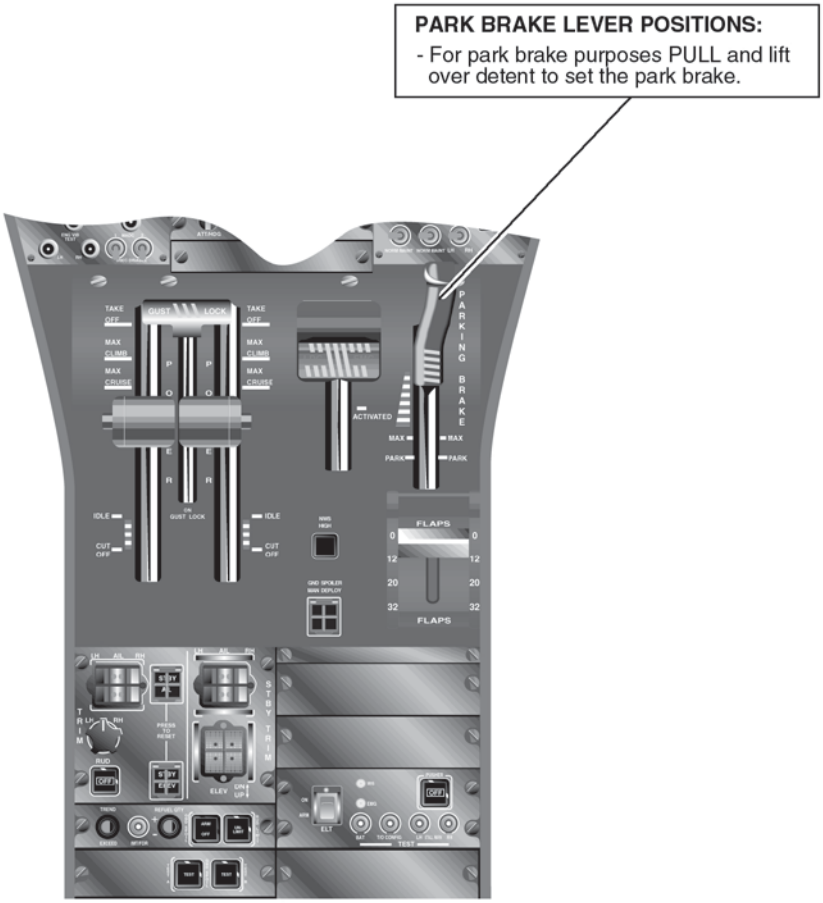

Park Brake Lever

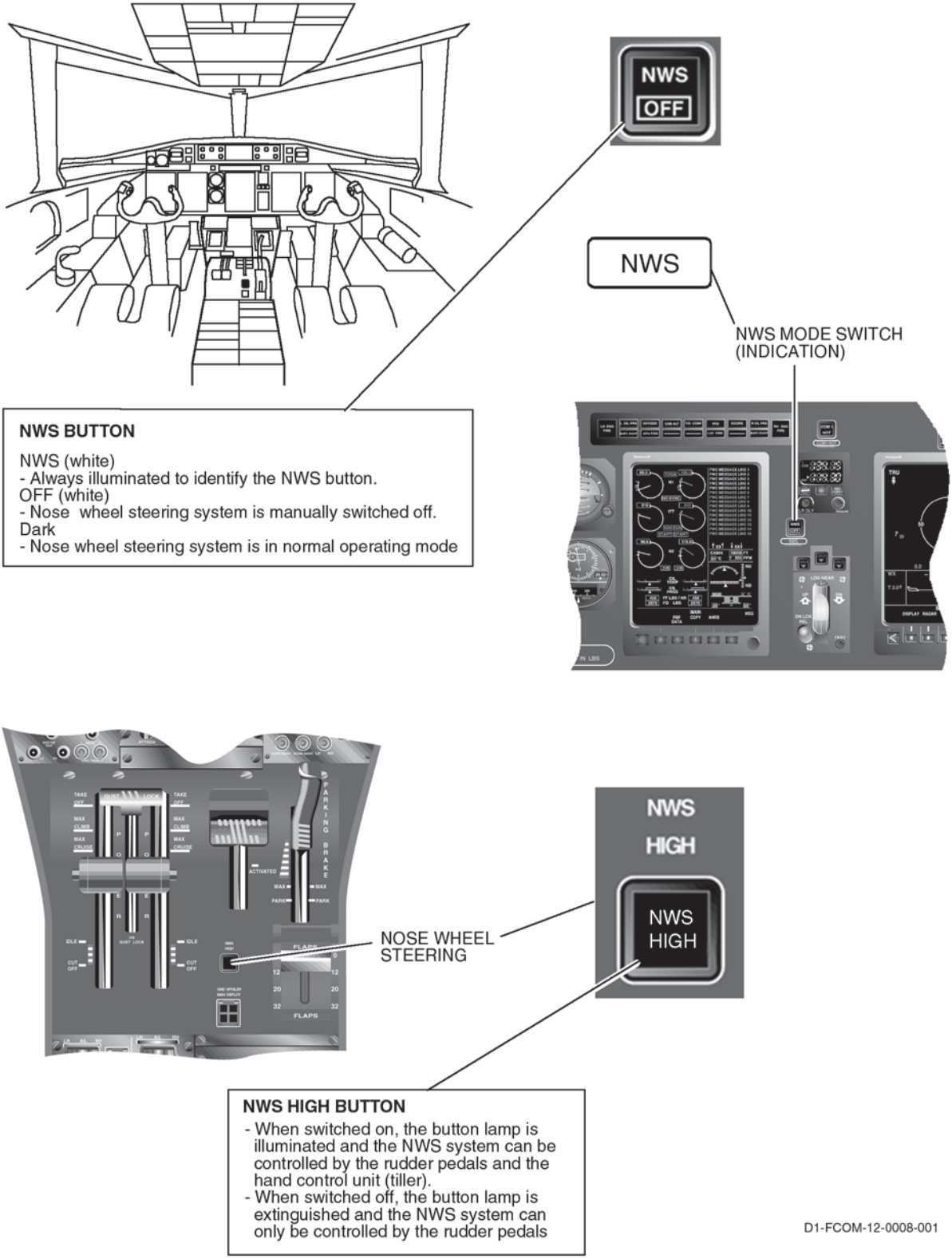
NWS
OFF
NWS
NWS MODE SWITCH
(INDICATION)
NWS BUTTON
NWS (white)
- Always illuminated to identify the NWS button.
OFF (white)
- Nose wheel steering system is manually switched off.
Dark
- Nose wheel steering system is in normal operating mode
NOSE WHEEL
STEERING
NWS
HIGH
NWS
HIGH
NWS HIGH BUTTON
- When switched on, the button lamp is illuminated and the NWS system can be controlled by the rudder pedals and the hand control unit (tiller).
- When switched off, the button lamp is extinguished and the NWS system can only be controlled by the rudder pedals
D1-FCOM-12-0008-001

NWS Button

MESSAGE (SYNOPTIC) Location (COLOR)	WARN TONE	CONDITION	INHIBIT 1	INHIBIT 2	INHIBIT 3
ALT ANTI SKID DEGR CAS Field (AMBER) **ALT ANTI SKID DEGR** HYDR Page (AMBER)		Alternate anti–skid protection is lost on one main wheel.		X	
ALT ANTI SKID FAIL CAS Field (AMBER) **ALT ANTI SKID FAIL** HYDR Page (AMBER)		Alternate anti–skid system failure.		X	
ALT BRK FAIL CAS Field (AMBER) **Norm BRK Symbol** HYDR Page		Alternate brake system not pressurized when expected.			
ALT BRK ON CAS Field (BLUE) **ALT BRK Symbol** HYDR Page		Alternate brake system is pressurized as expected.			
BRK COV FAIL CAS Field (AMBER) **BRK COV FAIL** HYDR Page (AMBER)		Changeover valve position is uncertain.			
BRK MAINT CAS Field (AMBER)		One or more brake temps exceeded 415^0 C.		X	X
BRK TEMP FAIL CAS Field (AMBER) **BRK TEMP FAIL** HYDR Page (AMBER)		One or more brake temps are invalid (out of range sensor or BTMS failure).		X	X
BRK TEMP HIGH CAS Field (AMBER) **BRK TEMP HIGH** HYDR Page (AMBER)		One or more brake temperatures or trends are above 225^0 C.		X	X

Message inhibit logic:

1. WOW, Engines off and Electrical Bus Failure refer to section 12–31–17–04
2. Takeoff phase
3. Landing phase

CAS Field and System Messages (Sheet 1 of 4)

MESSAGE (SYNOPTIC) Location (COLOR)	WARN TONE	CONDITION	INHIBIT 1	INHIBIT 2	INHIBIT 3
E/P–BRK ACCU PRSS CAS Field (AMBER)		Illuminates when the accumulator has low hydraulic pressure.		X	X
E/P–BRK ACCU PRSS HYDR Page (AMBER)					
LDG EMG ACTIVATED CAS Field (AMBER)		Illuminates when the emergency extension lever is pulled to extend position.		X	X
ACTIVATED HYDR Page (AMBER)					
NORM ANTI SKID DEGR CAS Field (AMBER)		Normal anti–skid protection is lost on one main wheel.		X	
NORM ANTI SKID DEGR HYDR Page (AMBER)					
NORM ANTI SKID FAIL CAS Field (AMBER)		Normal anti–skid system failure.		X	
NORM ANTI SKID FAIL HYDR Page (AMBER)					
NORM BRK FAIL CAS Field (AMBER)		Normal brakes are not pressurized when expected.		X	
NORM BRK FAIL HYDR Page (BLUE)					
NWS BYPASS FAIL CAS Field (AMBER)		Bypass valve is not in the commanded position.	X	X	
NWS BYPASS FAIL HYDR Page (AMBER)					
NWS FAIL CAS Field (AMBER)		NWS control unit detected a failure or NWS ECU not energized or NLG not down locked.	X	X	
NWS FAIL HYDR Page (AMBER)					
NWS HIGH CAS Field (AMBER)		Illuminates when the NWS is selected to HIGH authority and T/O power is selected or if NWS is selected to HIGH authority and in flight.			

Message inhibit logic:

1. WOW, Engines off and Electrical Bus Failure refer to section 12–31–17–04
2. Takeoff phase
3. Landing phase

CAS Field and System Messages (Sheet 2 of 4)

MESSAGE (SYNOPTIC) Location (COLOR)	WARN TONE	CONDITION	INHIBIT 1	INHIBIT 2	INHIBIT 3
NWS HIGH CAS Field (BLUE)		Illuminates when the NWS is selected to HIGH authority and WOW and T/O power is not selected.			
NWS INOP CAS Field (BLUE) **NWS INOP** HYDR Page (BLUE)		NLG down and locked and NWS manually switched off.		X	
NWS PWR UP FAIL CAS Field (AMBER)		NWS selector valve power on is more than 350 msec after NMS–ECU power on.		X	X
P–BRK ON CAS Field (AMBER)		Park brake applied and T/O power is selected.		X	
P–BRK ON CAS Field (BLUE) **P–BRK ON** HYDR Page (BLUE)		Park brake applied.			
P–BRK OFF HYDR Page (BLUE)		Park brake released.			
PROXI ARINC FAIL CAS Field (AMBER)		Total failure of both PROXI ARINC buses		X	X
PROXI BYPASS FAIL HYDR Page (AMBER)		NWS bypass valve PROXI sensor has failed.			
PROXI LOCK FAIL HYDR Page (AMBER)		Uplock or downlock failure detected by PSEU. Any single uplock, NLG downlock, or combination of two main landing downlock sensor failures, or any combination of two NLG downlock discrete outputs fail.			
PROXI MLG WOW FAIL HYDR Page (AMBER)		Both primary or both redundant MLG proximity sensors have failed or any combination of an inboard/outboard ground spoiler WOW 1 or 2 failure or any combination of an alternate or normal anti–skid WOW 1 or 2 failure.			
PROXI NLG WOW FAIL HYDR Page (AMBER)		Either primary or redundant NG WOW proximity sensor failed or PSEU NG WOW outputs failed.			

Message inhibit logic:

1. WOW, Engines off and Electrical Bus Failure refer to section 12–31–17–04
2. Takeoff phase
3. Landing phase

CAS Field and System Messages (Sheet 3 of 4)

PROXI SYS FAIL CAS Field (AMBER)		This CAS message is set for PROXI BYPASS FAIL, PROXI LOCK FAIL, PROXI MLG WOW FAIL, and PROXI NLG WOW FAIL HYDR Page messages.		X	X
PROXI SYS–A FAIL CAS Field (AMBER)		PSEU subsystem A has failed.		X	X
PROXI SYS–A FAIL HYDR Page (BLUE)					
PROXI SYS–B FAIL CAS Field (AMBER)		PSEU subsystem B has failed.		X	X
PROXI SYS–B FAIL HYDR Page (BLUE)					
LDG GEAR Control lever RED LIGHT	HI–LO CHIME	A non–mutable warning tone (HI_LO) is activated together with a red flashing light in the LDG GEAR control lever to indicate that the airplane is in the approach configuration and the landing gear is not selected down.			

Message inhibit logic:

1. WOW, Engines off and Electrical Bus Failure refer to section 12–31–17–04
2. Takeoff phase
3. Landing phase

CAS Field and System Messages (Sheet 4 of 4)

D1-FCOM-12-0009-002

CAS FIELD MESSAGES

The following messages can be displayed

- ALT ANTISKID DEGR	(amber)
- ALT ANTISKID FAIL	(amber)
- ALT BRK FAIL	(amber)
- BRK COV FAIL	(amber)
- BRK MAINT	(amber)
- BRK TEMP FAIL	(amber)
- BRK TEMP HIGH	(amber)
- E/P-BRK ACCU PRESS	(amber)
- LDG EMG ACTIVATED	(amber)
- NORM ANTISKID DEGR	(amber)
- NORM ANTISKID FAIL	(amber)
- NORM BRK FAIL	(amber)
- NWS BYPASS FAIL	(amber)
- NWS FAIL	(amber)
- NWS HIGH	(amber)
- NWS PWR UP FAIL	(amber)
- P-BRK ON	(amber)
- PROXI ARINC	(amber)
- PROXI SYS A FAIL	(amber)
- PROXI SYS B FAIL	(amber)
- PROXI SYS FAIL	(amber)
- ALT BRK ON	(blue)
- NWS HIGH	(blue)
- NWS INOP	(blue)
- P-BRK ON	(blue)

Indications on EICAS Display

LDG EMG ACTIVATED (amber)
Message
- ACTIVATED (amber)
  Illuminated when the landing gear emergency extension lever is pulled.

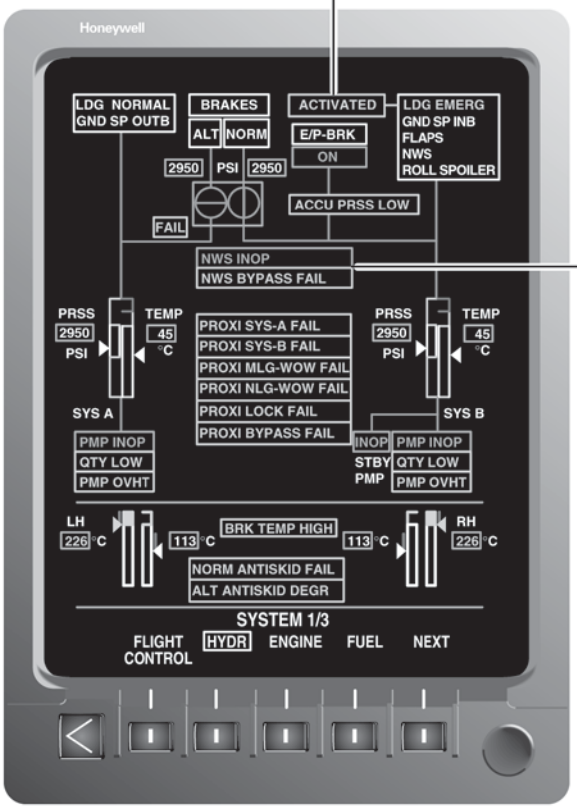

D1-FCOM-12-0010-003

NWS INOP (blue)
- Illuminated when the NWS system is switched off

NWS FAIL (amber)
- Illuminated when the NWS system has failed to shutdown or activate correctly.

NWS BYPASS FAIL (amber)
- Illuminated when the NWS Bypass valve is not in bypass position.

NWS HIGH
- Illuminated (blue) when weight on NLG wheels and below T/O power.
- Illuminated (amber) when weight off NLG wheels or weight on NLG wheels and T/O power is selected.

Indication/message on HYDR Page (Sheet 1 of 4)

ALT BRAKE SUPPLY PRESS (DIGITAL)
Illuminated, when Alt brakes are selected. Illuminated (white) when within normal pressure range. Illuminated (amber) when above or below normal pressure range.

NORM BRAKE SUPPLY PRESS (DIGITAL)
Illuminated (white) when within normal pressure range. Illuminated (amber) when above or below normal pressure range.

E/P-BRK
- ON (blue)
  Illuminated when the park brake is set and sufficient pressure is available.
- OFF (blue)
- Illuminated when the park brake is off.

BRK COV (synoptic)
- Normal open/alternate closed, valve positions illuminated (green)
- Alternate open/normal closed valve positions illuminated (white)
- failed valve positions (amber/crosses).

ACCU PRESS LOW (amber)
- Illuminated when the park brake accumulator-has low pressure.

FAIL (amber)
BRK COV position unknown

BRK TEMP HIGH (amber)
Illuminates when any wheel brake unit exceeds 225°C.

NORM ANTISKID FAIL
Illuminates when the normal anti skid system has failed.

ALT ANTISKID FAIL
Illuminates when the alternate anti-skid system has failed.

NORM ANTISKID DEGR
Illuminates when the normal anti skid system is degraded.

ALT ANTISKID DEGR
Illuminates when the alternate anti-skid system is degraded.

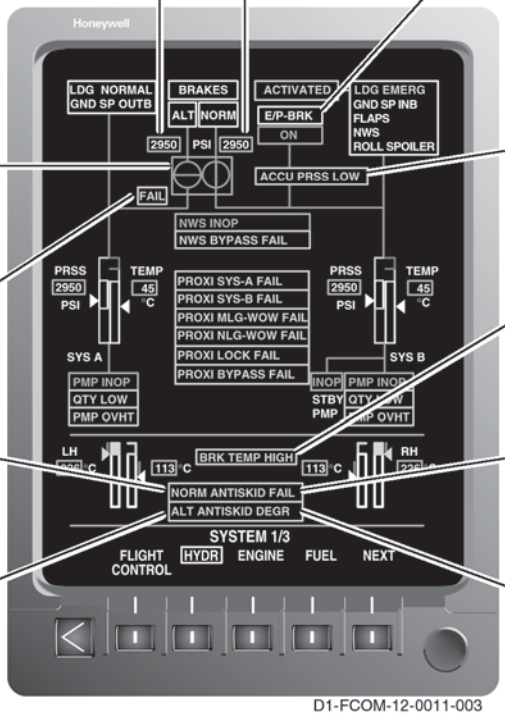

D1-FCOM-12-0011-003

-SEE SHEET 4 OF 4 FOR DIGITAL BRAKE TEMPERATURE INDICATIONS.
NOTES: -SEE SHEET 3 OF 4 FOR BAROGRAPH BRAKE TEMPERATURE INDICATIONS.

Indication/messages on HYDR Page (Sheet 2 of 4)

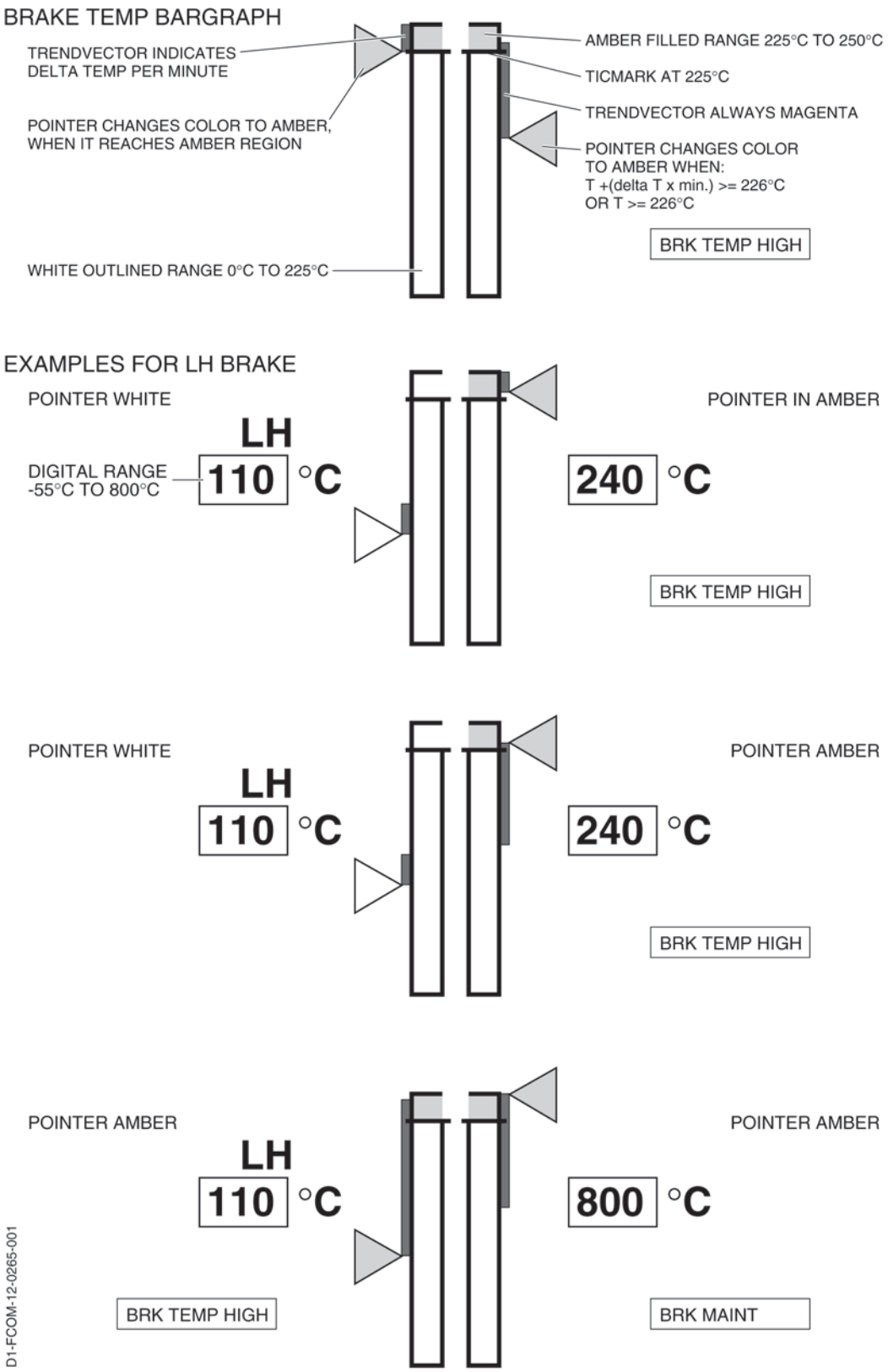

Indication/message on HYDR Page (Sheet 3 of 4)

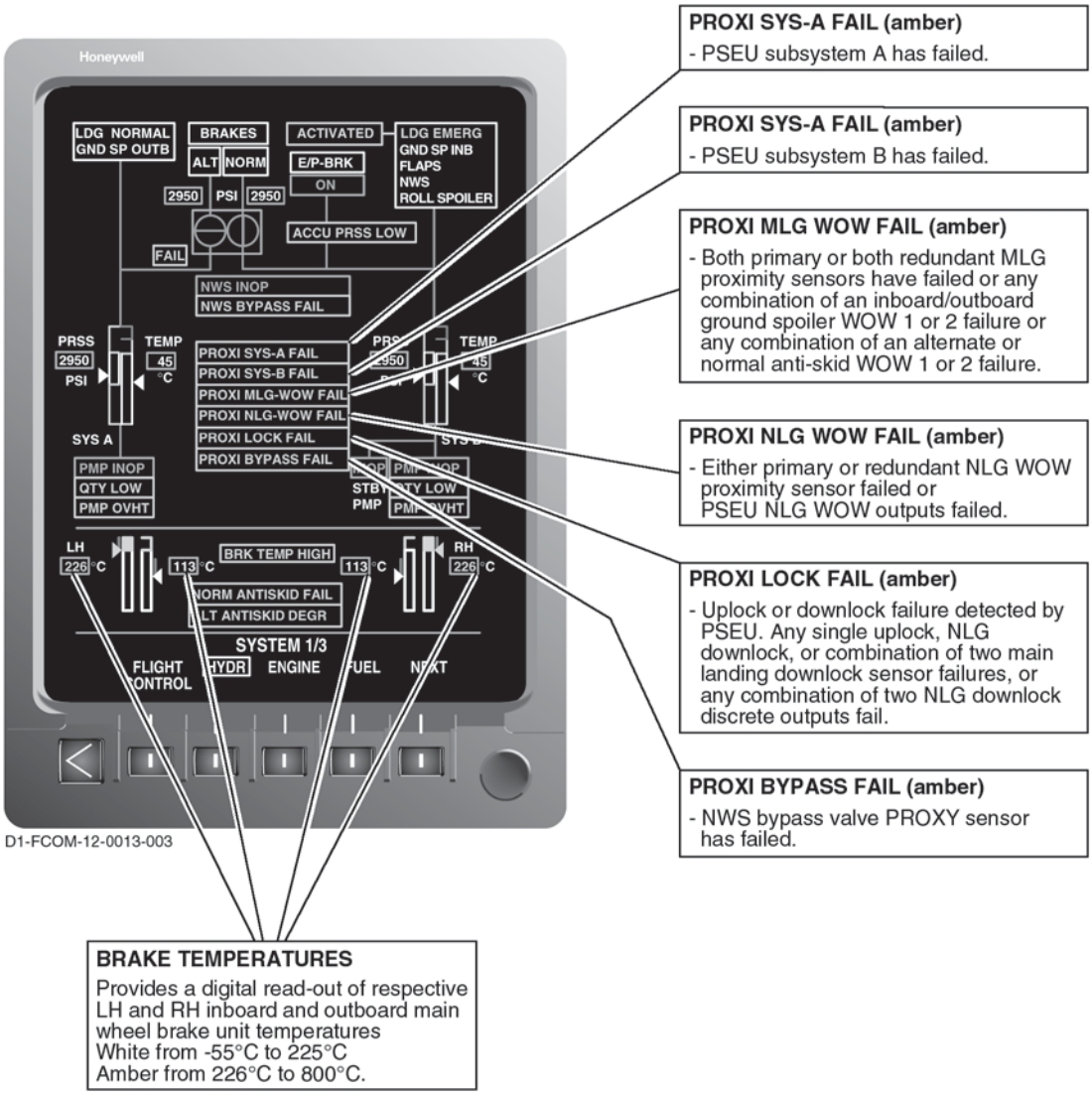

PROXI SYS-A FAIL (amber)
- PSEU subsystem A has failed.

PROXI SYS-A FAIL (amber)
- PSEU subsystem B has failed.

PROXI MLG WOW FAIL (amber)
- Both primary or both redundant MLG proximity sensors have failed or any combination of an inboard/outboard ground spoiler WOW 1 or 2 failure or any combination of an alternate or normal anti-skid WOW 1 or 2 failure.

PROXI NLG WOW FAIL (amber)
- Either primary or redundant NLG WOW proximity sensor failed or PSEU NLG WOW outputs failed.

PROXI LOCK FAIL (amber)
- Uplock or downlock failure detected by PSEU. Any single uplock, NLG downlock, or combination of two main landing downlock sensor failures, or any combination of two NLG downlock discrete outputs fail.

PROXI BYPASS FAIL (amber)
- NWS bypass valve PROXY sensor has failed.

BRAKE TEMPERATURES
Provides a digital read-out of respective LH and RH inboard and outboard main wheel brake unit temperatures
White from -55°C to 225°C
Amber from 226°C to 800°C.

Indication/messages on HYDR Page (Sheet 4 of 4)

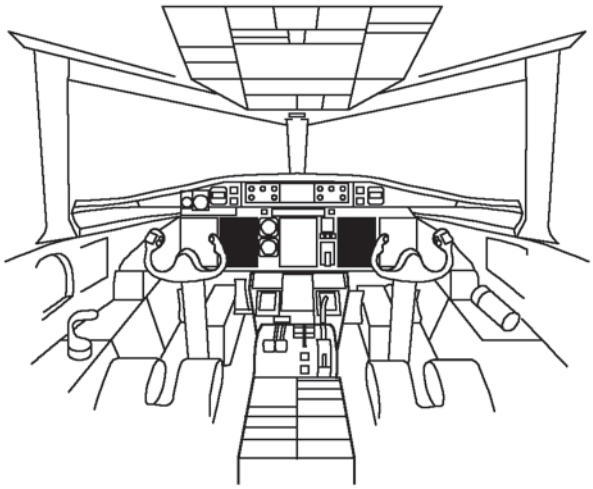

HYDRAULICS SYSTEM (INDICATOR) (white)

ANTISKID MAINT (amber)
- Illuminates to indicate antiskid system maintenance information is stored in ASCU Memory

PROXI MAINT (amber)
- Illuminates to indicate maintenance information is stored in PSEU memory.

MAX BRAKE TEMPERATURES

WHITE: 0°C - 225°C
AMBER > = 226°C
- Digital temperature display range from 0°C to 800°C

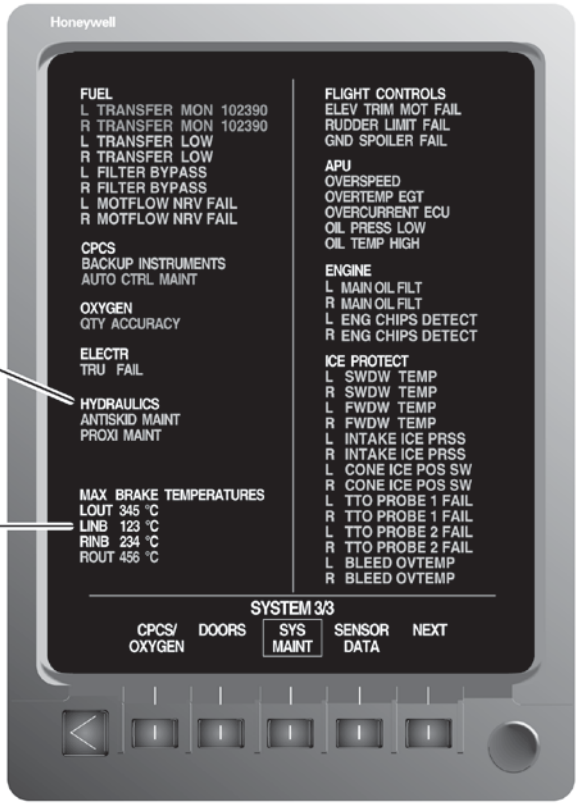

D1-FCOM-12-0014-002

Messages on SYS MAINT Page

LANDING GEAR

GENERAL

The airplane has a hydraulically operated retractable tricycle landing gear equipped with twin wheels on each gear leg. The main gears are retracted inboard into gear wells in the fairings on each side of the fuselage. Main gear doors close off the gear–well area around the outboard mainwheels. The nose gear is retracted forward into the nose gear bay which is closed off by doors when the gear is retracted. The main and nose gear doors are actuated by mechanical linkages when the gear retracts and extends.

MAIN LANDING GEAR

Each main landing gear (MLG) assembly is a twin wheel, trailing arm gear with an oleo–pneumatic shock absorber. The MLG legs are each locked in the extended position by a side strut assembly. The side strut assembly is connected between the fuselage and the MLG leg and incorporates an overcenter downlock mechanism and a downlock release actuator. The main gear is retracted inboard by hydraulic power into gear wells in the fairings on each side of the fuselage.

Main Gear Doors

With the exception of the outboard mainwheel on each main gear, the main gear wells are closed off by
doors when the gear is retracted. The main gear door assembly consists of an upper, a middle and a lower folding door, The lower door has a cut–out for the outboard mainwheel which protrudes slightly out of the wheel well and is closed off by a brush type seal when the main wheel is in the retracted position. The main gear doors are actuated by mechanical linkages during extension and retraction.

NOSE LANDING GEAR

The nose landing gear (NLG) assembly is a twin wheel, hydraulically steered gear with an oleo–pneumatic shock strut integrated into the leg assembly. The NLG is pivot mounted between the LH and RH walls of the nose gear bay. In the gear extended position, the NLG is raked slightly forward and is locked by a down lock strut assembly. The NLG is retracted forwards by hydraulic power into the nose gear bay. When the airplane leaves the ground the nose gear wheels automatically center. Refer to the nose wheel steering (NWS) system for further information on nose wheel control.

Nose Gear Doors

The nose gear doors consist of a LH and RH forward door, and a LH and RH rear door. They are actuated by mechanical linkages during retraction and extension of the nose gear. With the nose gear retracted the doors close the nose gear bay. Seals close off the door edges, except for a gap between the rear of the rear doors and the fuselage. This gap allows cabin pressure to be dumped in an emergency. A shear pin, in each front door opening linkage, prevents damage to the door linkages if there is a tire burst or a cabin pressure dump with the nose gear retracted. The pin shear to allow the front doors to open slightly and release the pressure, gear and door operation is not affected. When the nose gear is extended the front and rear doors open to allow the leg to extend, when the leg is clear of the nose gear bay the front doors close again. On the ground a door release handle at each side of the nose gear bay allows the forward doors to be opened for maintenance purposes.

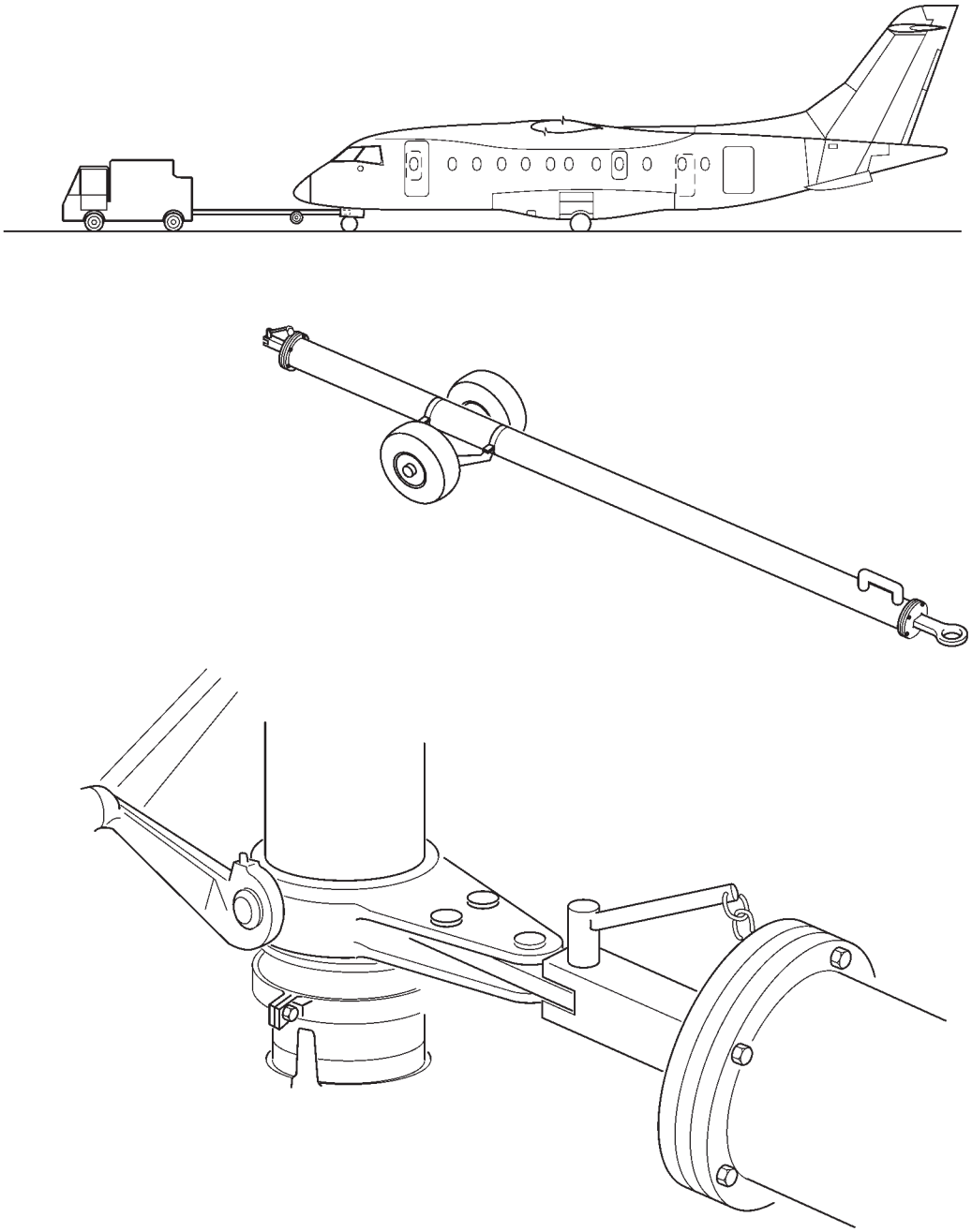

D1-AMMX-09-0001-002

TOWING ARRANGEMENT

LANDING GEAR OPERATION AND INDICATION

LANDING GEAR CONTROL LEVER

The landing gear control lever is positioned on the right side of the center instrument panel within reach of the captain and first officer. The lever is mechanically locked in the DN position and is electrically unlocked when both of the WOW switches of each landing gear (LH, RH, and Nose Gear) indicate an airborne condition. The interlock can be overridden by a mechanical unlocking button labeled DN LOCK REL which provides a backup if an electrical failure prevents automatic unlocking.

The landing gear is normally extended and retracted using hydraulic power from hydraulic system A. Should system A fail, the landing gear can be extended in an emergency using hydraulic power from hydraulic system B. (Refer to section 12–29–00–00 – HYDRAULIC POWER).

Indication and Warning

The indication and warning system provides the captain and first officer with information on the status of each main and nose landing gear. The system provides caution and status messages which are displayed in the CAS field on the EICAS display and on the HYDR page. With the exception of landing gear warning, the caution messages are brought to the attention of the flight crew by a single chime and flashing master caution buttons. The landing gear warning is a hi–lo chime, together with a flashing red light in the gear lever handle. If a caution message has an autopage facility, the appropriate system page is armed when the CAS field message is acknowledged by pressing the master caution button. The respective page can then be called up on the captain's and/or first officer's multifunction display (MFD).

The indication and warning system consists of a proximity switch electronic unit (PSEU) and proximity switches. The information generated by the proximity switches is processed by the PSEU and is subsequently displayed as gear status information to the captain and first officer. The main and nose landing gear are also fitted with weight–on–wheels (WOW) proximity switches which provide various airplane systems with ground or air mode information. The functional status of the gear proximity switches is monitored by the PSEU.

Gear Position

The position of the landing gear is monitored by proximity switches installed in the uplocks and downlocks and indicated by conventional lights on the landing gear control lever panel. Three green lights (▼) indicate gear down and locked and three red lights (UNLK) indicate gear in transit or not locked in the selected position. These lights are extinguished when the gear is up and locked.

A non–mutable aural warning (high–low chime), combined with a red flashing light in the landing gear control lever provides a warning if:

– the landing gear is not down and locked and
– both thrust levers are retarded to a point slightly above of FI and
– the radio altimeter indicated height is less than 400 ft.

The EICAS system provides two redundant Angle–Of–Attack (AOA) signals as a back–up for radio altimeter failure. These signals give an indication if the AOA limit for landing (generated as a function of the flap position) has been reached or exceeded.

EMERGENCY EXTENSION OF THE LANDING GEAR

In the event of normal gear extension failure, emergency extension of the landing gear is activated by the emergency landing gear extend lever (LDG EMG lever). The lever is located in the middle of the center pedestal. When this lever is pulled fully aft to the LDG EMG EXTENSION position, hydraulic pressure in the normal landing gear system is bypassed to system A return. At the same time hydraulic pressure, from system B, is supplied to the emergency extend system. The main gear and nose gear uplocks open to release the landing gear and it begins to extend under gravity.

Hydraulic power is then applied to the LH and RH main gear downlock assist actuators to downlock each main gear leg. The nose landing gear extension is assisted by aerodynamic forces to the downlock position and therefore does not require hydraulic power.

Two restrictor valves are installed in the hydraulic supply line to the emergency extension system. They reduce the speed at which the landing gear extends, to prevent damage to the airplaine structure and downlocks. The emergency extension time is approximately 25 seconds, if one restrictor valve fails this decreases to 15 seconds (which is the normal landing gear extension time).

For further information on the hydraulic system, refer to section 12–29–00–00 – HYDRAULIC POWER.

WHEELS AND BRAKES

GENERAL

The main and nose landing gear legs are each equipped with twin wheels and tubeless tires. Each main gear wheel is equipped with a multi–disk brake unit that is normally supplied with hydraulic power from the normal brake system. If the normal brake system is not available, the main wheel brakes can be operated with hydraulic power from the alternate brake system. In addition there is the park brake system, which is used to apply the brakes when parked. It can also be used to give a limited emergency brake function in the event of a failure of both the normal and alternate brake systems.

The integrity of the braking system is continuously monitored. System status, temperature or failure is displayed on the EICAS.
For further information on the hydraulic system, refer to section 12–29–00–00 HYDRAULIC POWER.

WHEELS

The main and nose gear wheels are of the split rim type and are manufactured from forged aluminum. The main and nose gear tires are of the tubeless type and are inflated through a valve in the wheel rim. Refer to FCOM Vol. 1 LIMITATIONS section for information on maximum tire speeds.

Each main gear wheel has a pressure relief valve and three thermal fuse plugs which allow rapid evacuation of air from the tire. The pressure relief valve protects the wheel and tire against over–inflation and the thermal fuse plugs protect the wheel and tire against failure caused by excessive heat build–up through maximum braking.
Each nose gear wheel is protected by a pressure relief valve which protects the respective wheel and tire against over–inflation.

NORMAL AND ALTERNATE BRAKE SYSTEMS

Normal Braking System

Under normal operating conditions the wheel brakes are controlled by the normal braking system which is powered by hydraulic system B. It gives differential braking with anti–skid protection to each main wheel. The brakes are actuated by applying toe pressure at the captains or first officers rudder pedals. Differential braking is achieved by applying dissimilar toe pressure to the LH and RH rudder pedals. The normal brake system also provides automatic braking of the main wheels during landing gear retraction. The latest technology carbon brakes consist of carbon disc running on carbon stators. The level of energy input has very little impact on the overall wear rate of the carbon discs. At each break application a layer of carbon molecules is shed between stators and discs acting as a lubricant. Therefore the amount of wear during each landing is extremely low irrespective of energy applied.
In addition a monitoring system supplies information on the temperature of each of the four wheel brakes which is displayed to the flight crew on EICAS.

Alternate Braking System

If the normal brake system is not available, the wheel brake units are supplied by the alternate brake system with pressurized fluid from hydraulic system A. The alternate system is activated automatically or manually through the brake change–over valve. Automatic change–over occurs if hydraulic system B pressure is insufficient or manually, by the flight crew, if there is a failure of the normal brake system. Manual selection is via the BRK COV switch on the HYD panel. The operation of the alternate brake system is identical to the normal brake system.

Anti–Skid System

The normal and alternate braking systems are each equipped with an identical anti–skid system. The anti–skid system uses signals from wheellspeed sensors, at each mainwheel, to provide antiskid control, touchdown protection and locked wheel protection. This prevents flattening or bursting the tires on touchdown and during the landing run.
The touchdown protection circuit allows the airplane to land with the brake pedals inadvertently pressed. If one WOW switch of either main landing gear indicates that the leg is not in contact with the ground, the anti–skid system dumps the pressure to all four brake units. Touchdown protection is disabled after wheel spin–up or three seconds after the aircraft has landed.

The locked wheel protection circuit prevents prolonged locked wheel conditions by dumping the brake pressure to the locked wheel. The anti–skid system detects a locked wheel when a wheel is less than 30% of the other wheels speed (reference speed). The brake pressure to the locked wheel is dumped until it reaches a wheel speed of 70% of the reference speed.

Each normal and alternate anti–skid system has a built–in–test feature which continuously monitors the integrity of the respective system. The crew is informed of a failed or disabled anti–skid system by indications on the EICAS.

PARK BRAKE SYSTEM

The brake system is used to apply the aircraft brakes to stop movement of the aircraft during maximum thrust or when the aircarft is parked. It can also be used to give controlled braking during aircarft movem,ent (IE towing) and in the unlikely event of a loss of the two brake systems (normal and alternate) give a limited braking function (without antiskid or differential braking).

The park brake system is activated by pulling the park brake lever located on the forward RH section of the center pedestal. The required braking performance at the main wheels is directly proportional to the amount of pressure that is applied to the brake lever when pulled in a rearward direction.

CAUTION: DIFFERENTIAL BRAKING AND ANTI–SKID PROTECTION ARE NOT AVAILABLE WHEN THE PARK BRAKE SYSTEM IS IN USE.

The park brake system is powered by hydraulic pressure from system B which constantly maintains the park brake accumulator in a charged condition. Should system B fail, the park brake accumulator retains its fully charged condition. The accumulator pressure begins to reduce with each operation of the brake lever.There are at least six full brake applications available as long as low accumulator pressure is not indicated.

Controlled braking is carried out by moving the park brake lever from its forward position (brakes fully off) rearwards until it hits the stop (brakes fully on). As the lever is moved, the braking force is applied simultaneously at all four brake units and is proportional to the position of the lever.

If the park brake lever is moved through the stop and into the PARK position the brakes are left in the fully applied state. To release the brakes, lift the park brake lever from the PARK position, and move it to the fully forward position (brakes fully off).

WHEEL BRAKE TEMPERATURE AND COOLING

The temperature level of each of the four wheel brakes is monitored by a brake temperature monitoring system (BTMS). The brake temperature is sensed by a probe installed in each brake housing and the related temperature is displayed on the HYDR page.

Takeoff is prohibited if BRK TEMP HIGH or BRK MAINT caution is displayed on EICAS.
A brake temperature monitoring system failure is displayed as an amber brake BRK TEMP FAIL on the EICAS. Takeoff with the brake temperature monitoring system (BTMS) inoperative is prohibited, unless brakes are cool enough to touch.

If maximum braking was used throughout the landing with BTMS inoperative, a brake inspection by maintenance is required.

If any of the four displayed brake temperature values exceed 416 °C, a BRK MAINT amber CAS message is posted on the EICAS and a brake inspection by maintenance is always required.

NOSE WHEEL STEERING

GENERAL

The nose wheel steering system provides airplane steering during taxi, take–off and landing. It is an alternative method to steering with the rudder and differential braking. The NWS system is electrically controlled, and its hydraulic power is supplied by hydraulic system B. It receives inputs from the rudder pedals and the hand control unit (the tiller). The maximum nose wheel deflection through the rudder pedals is +/– 10 ° and through the tiller the maximum deflection is +/– 60 °.

The NWS is in operation when the NLG WOW switches show the aircraft is on the ground and the NWS switch/light is set to the on position. With the NWS switch set to the on position, the NWS is enabled and the rudder pedals give the command signals to the NWS system. If the NWS HIGH switch is set to the HIGH position the rudder pedals and the tiller provide the command signals to the NWS system.

The command signals from the rudder pedals are always available with the NWS enabled but can be disabled by pressing and holding the pedal disconnect button on the tiller. The NWS system has restrictors and other features that help to prevent nose wheel shimmy, with or without the NWS system enabled.

The airplane can be towed without disconnecting the NWS. During towing nose wheel deflections of up to +/– 100 ° are permitted, but the NWS system must be switched off to prevent damage to steering components.

RUDDER PEDAL INPUT

The captains LH rudder pedal is connected mechanically to a command potentiometer assembly. With the NWS selected on, when the rudder pedals are moved the potentiometers send voltage signals to the NWS Electronic Control Unit (ECU) for processing. The voltage signal is proportional to the deflection of the rudder pedals and gives a maximum nose wheel deflection of +/– 10 ° .

TILLER AND PEDAL DISCONNECT BUTTON

The tiller with pedal disconnect button is located on the LH side console. It is mechanically connected to a command potentiometer assembly which sends directional input signals to the NWS electronic control unit for processing. The tiller is spring–biased into a center detent position and must be pressed down before it can be turned.

When the tiller is released a centering spring returns the tiller to the center position. This centering facility provides automatic centering of the nose wheels as long as no steering commands are received from the rudder pedals.

If in strong wind conditions it is necessary to turn the tail of the airplane through the wind. Large rudder deflections could occur which cannot be fully compensated by the pilot. This could cause unwanted nose wheel steering deflections. To avoid this situation the pedal commands to the NWS system can be disabled by holding the pedal disconnect button on the tiller unit pressed. Steering is now controlled by the tiller only. The pedal commands are re–enabled when the pedal disconnect button is released.

STEERING FUNCTION

With the NWS system enabled and the airplane on the ground (NLG WOW), the NWS ECU receives command signals from the rudder pedals and/or tiller. The ECU compares these signals with signals received from the feedback potentiometers on the steering actuator. Until these signals agree the ECU sends signal to energize the servo valve which controls the flow control valves in the steering actuator. The flow control valves give LH or RH movement of the nose wheel (dependent on command signal input) through the actuator rack and pinion. As the nose wheel moves the feedback potentiometers (on the rack) give a signal to the ECU of the nose wheel position. When this signal agrees with the command signal input from the rudder/tiller, the required NWS steering angle is reached and the ECU de–energizes the servo valve.