POWERPLANT

CONTROLS AND INDICATORS

POWER UPTRIM ADVISORY LIGHT (green)

- indicates uptrim signal has been sent to operating engine
- to confirm uptrim check applicable engine torque gauge for power increase

ENGINE ECU RATING SELECTOR (rotary control)

TOP - Take-Off Power

TOP selection is operative, all other selections are inoperative

ENGINE ECU rating selector remains at TOP for all operations

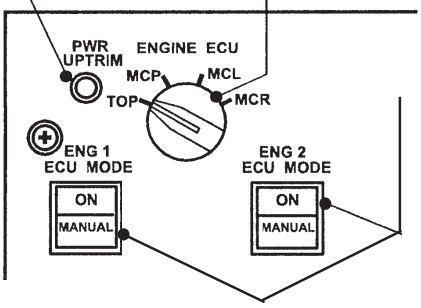

ECU MODE SELECTOR SWITCHLIGHTS (alternate action)

PUSH - ON segment (green)
- indicates fuel scheduling is controlled by engine ECU

PUSH - MANUAL segment (amber)
- indicates fuel scheduling is controlled by the MFC (manual mode)

Engine ECU control and indication

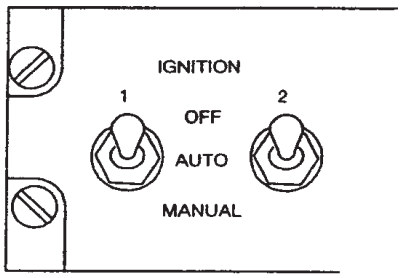

OVERHEAD PANEL

IGNITION CONTROL SWITCH
(three-position toggle)

- controls ignition for related engine.

AUTO - ignition is activated and deactivated automatically by start control circuits for engine starting OR: activated when NH decreases below 60%. Auto Ignition is disabled with condition lever in the FUEL OFF position.

MANUAL - ignition is on continuously.

OFF - ignition cannot be activated
- OFF selection is required for dry motoring engine with starter without ignition

Ignition control

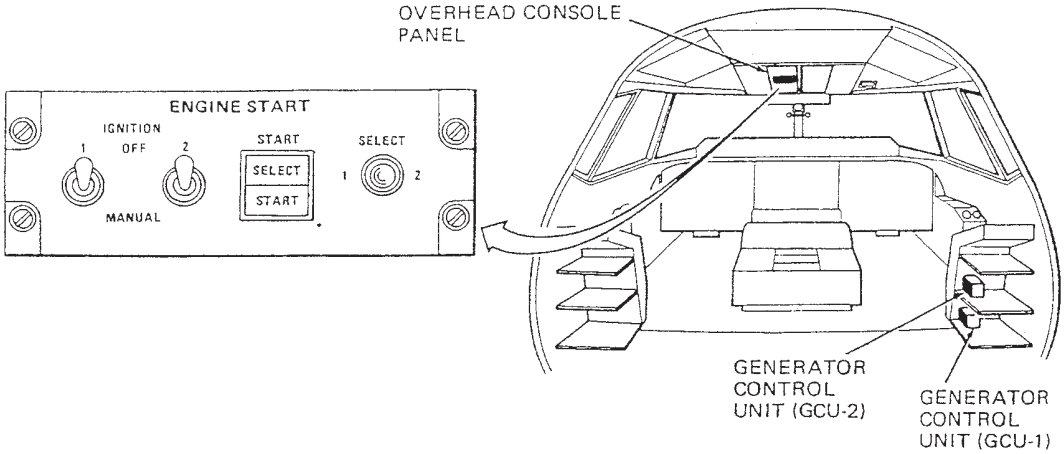

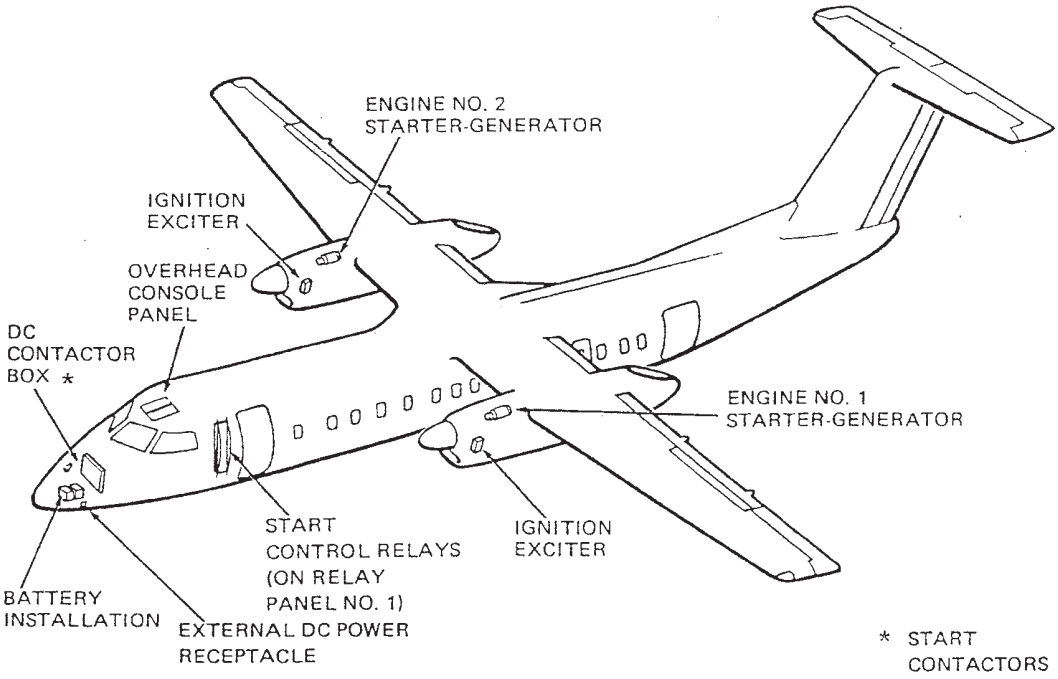

Engine start panel

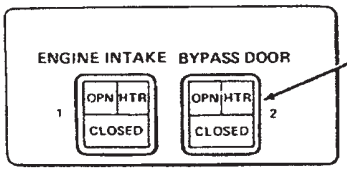

ENGINE INSTRUMENT PANEL

ENGINE INTAKE BYPASS DOOR SWITCHLIGHT

PUSH – CLOSED segment illuminates green

PUSH – OPN HTR segment illuminates amber

- indicates door opened and heater activation
- heater activates with door open and associated engine running

Engine intake bypass doors panel.

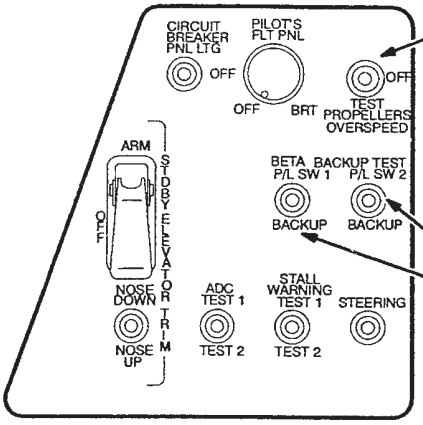

PROPELLER OVERSPEED TEST SWITCH
(lever locked momentary action)

TEST – simulates propeller overspeed condition with power levers advanced.

– serviceable governors confirmed by propellers stabilizing at 960 RPM.

– power levers must be returned to FLT IDLE before releasing switch to prevent RPM surge.

BETA BACK–UP SYSTEM TEST SWITCH
(three position momentary action , center position is a 'no–contact' position)

BACKUP – with power lever retarded sufficiently to illuminate GROUND RANGE light, backup system is triggered causing propeller to cycle in and out of ground range (GROUND RANGE light flashes on and off).

P/L SW – with engine slightly above flight idle, GROUND RANGE lights illuminate, indicating serviceable limit switch.

Engine/propeller test functions

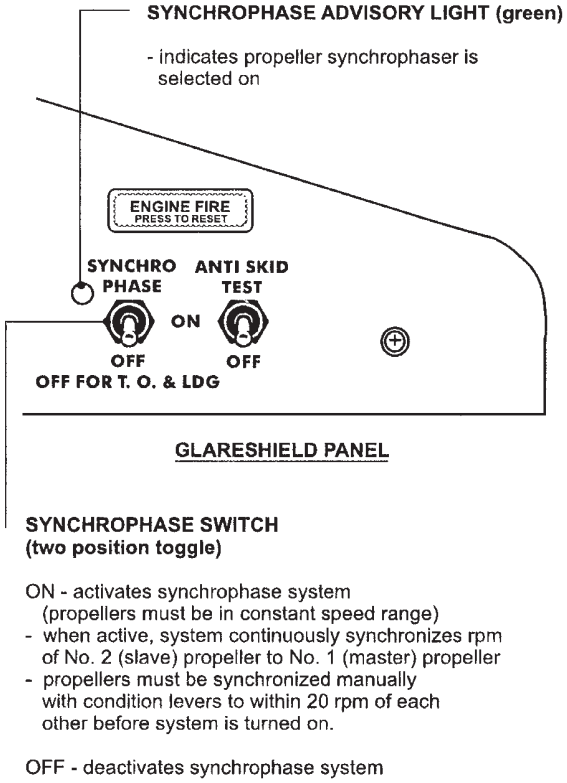

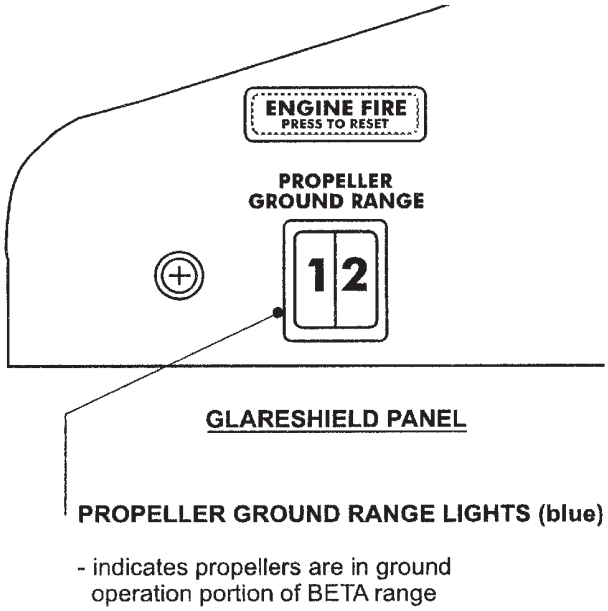

Propeller ground range/synchrophase indicators

AUTOFEATHER SELECT/ARM SWITCHLIGHT

PUSH – SELECT – illuminates green indicating autofeather system is active.

ARM – illuminates amber indicating system is armed when engine produces greater than 50% torque and power levers are advanced.

PROPELLER FEATHER PUMP RUNNING ADVISORY LIGHT

ILLUMINATED – (green) indicates propeller feathering pump is energized.

– pump running is timed out after 18 seconds.

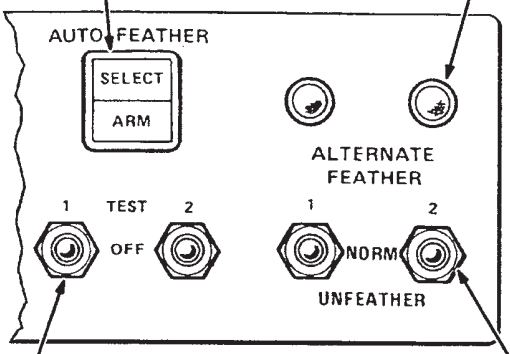

ENGINE INSTRUMENT PANEL

AUTOFEATHER TEST SWITCHES
(momentary contact to TEST position)

OFF – is no contact position

TEST – contact position to facilitate the following test sequences

– power levers at FLT IDLE.

– condition levers at MAX RPM.

– with AUTOFEATHER SELECT illuminated.

– select both AUTOFEATHER TEST switches to TEST.

– simulates 60% torque for each engine.

– ARM light illuminates.

– release of one TEST switch will initiate autofeather of opposite engine.

– autofeather is confirmed (ENGINE FAIL light illuminates, ARM light goes out).

– opposite switch is released to OFF.

– feathering propeller unfeathers.

ALTERNATE FEATHER/UNFEATHER SWITCHES
(three position switches)

ALTERNATE FEATHER – switch is manually raised from NORM detent selected to and mechanically latched in position.

– propeller is feathered through propeller feather pump which augments propeller control oil pressure during engine shut–down or provides total oil pressure when engine is not operating.

NORM – propeller feather pump running is initiated through AUTO FEATHER system.

– feather pump augments propeller control oil pressure.

UNFEATHER – switch is selected downward from NORM position and electrically latched in UNFEATHER position by latching solenoid.

– switch is electrically unlatched to NORM position after 18 seconds pump running time.

Autofeather - controls/indicators

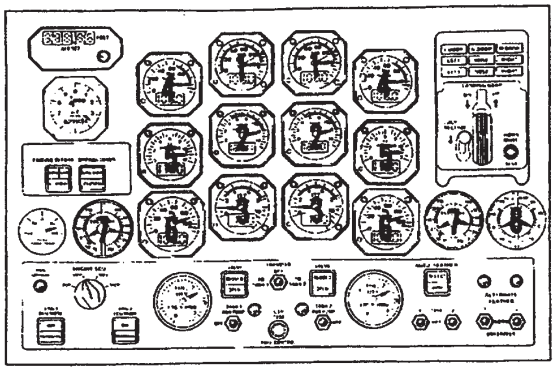

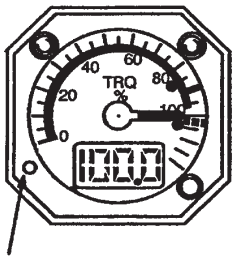

TEST
BUTTON

PUSH – Analogue pointer moves to 105% (blue dot), digital display shows 105.0 and warning light illuminates to verify indicator internal circuits.

ENGINE TORQUE INDICATOR (1)

Indicates engine torque in percentage as sensed by torque signal conditioner unit (SCU) and sensor. The pointer (analogue) indicates up to 120%. Liquid crystal digital display indicates to one decimal point, equal the pointer movement to 120% and continue to 199% . Torque values greater than these values inhibit the digital display indications (dashes displayed). These values are sensed to be incorrect. An indicator electrical power supply failure will cause the pointer to move off–scale below zero and the digital display to blank.

Range Marks:

Normal operation (green arc) ..... 0 to 96%
Normal maximum (red radial) 90%
Uptrim max. (dashed red radial) 105.6%
Caution (uptrim) range (yellow arc) 96 to 105.6%

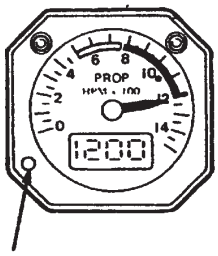

TEST
BUTTON

PUSH – pointer indicates 1050 rpm (blue dot) with same shown on digital display, to verify internal indicator circuits.

PROPELLER RPM INDICATOR (2)

Indicates propeller rpm as sensed by speed sensor on reduction gearbox. Pointer indication is duplicated by integral liquid crystal display. Pointer indicating below zero and blank LCD display indicates power failure.

Range Marks:

Maximum rpm (red radial) ..... 1200 rpm
Normal operation
(green arc) ..... 780 to 1200 rpm
Cautionary range
(yellow arc) ..... 500 to 780 rpm

Engine instruments

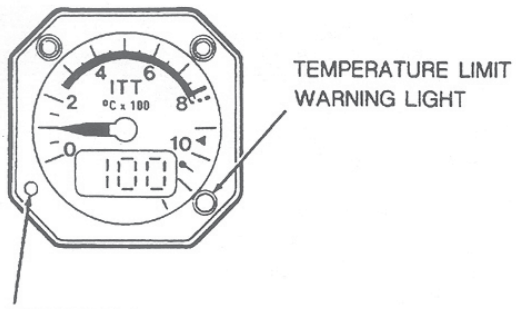

TEST BUTTON

PUSH – pointer indicates 1050°C (blue dot), display indicates same, and limit warning light illuminates to verify internal indicator circuits.

INTER–TURBINE TEMPERATURE INDICATOR (3)

Indicates temperature as sensed by thermo-couples positioned between power turbine and low pressure gas generator turbine. Pointer indication is duplicated by integral liquid crystal display – Amber warning light illuminates at maximum operating temperature of 800°C. Pointer at below zero and blank LCD indicates power failure.

Range Marks:

Maximum – normal operation
(red radial) ..... 765°C
Maximum – uptrim operation
(dashed red radial) ..... 800°C
Maximum – starting
(red triangle) ..... 950°C
Normal operating
(green arc) ..... 250 to 800°C

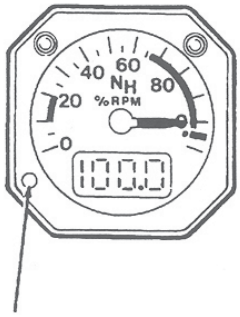

TEST BUTTON

PUSH – pointer indicates 105% (blue dot) and display indicates same, to verify internal indicator circuits.

HIGH PRESSURE GAS GENERATOR SPEED (NH) INDICATOR (4)

Indicates high pressure gas generator rpm in percentage as sensed by speed sensor on accessory gearbox. Pointer indication is duplicated by integral liquid crystal digital display to one decimal place. Pointer indicating below zero with blank LCD indicates power failure.

Range Marks:

Maximum – normal operation
(red radial) 102.7%

Normal operation – starting
(green arc) ..... 10 to 20%
– running (green arc) .... 66 to 102.7%

Engine instruments

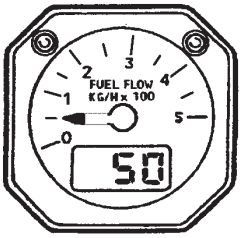

FUEL FLOW INDICATOR (5)

Indicates flow rate of fuel being supplied to combustion chamber in kilograms-per-hour as sensed by impeller type flow transmitter in HMU fuel delivery line. Pointer indication is duplicated by integral liquid crystal display. Pointer indicating below zero with blank LCD indicates power failure.

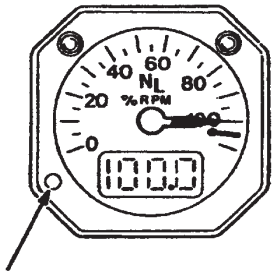

TEST BUTTON

PUSH – pointer aligns with an unlit blue dot at 105% NL reading with an equivalent reading on digital display.

LOW PRESSURE GAS GENERATOR SPEED (NL) INDICATOR (6)

Indicates low pressure gas generator speed as a percentage in response to a speed sensor in each LP compressor housing.

Range Marks:

Maximum Operation
(red radial) 104%

Engine instruments

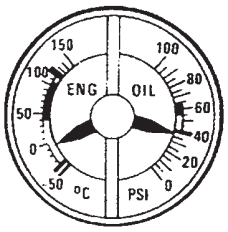

ENGINE OIL TEMPERATURE/PRESSURE INDICATOR (7)

Combined indicator (oil temp. left side, oil press. right side) indicates oil temperature (as sensed by bulb at oil filter) in degrees C and oil pressure (as sensed by pressure transmitter in oil system) in psi.

Range Marks:

Oil Temp

Maximum allowable (red radial) ..... 125°C
Minimum allowable (red radial) ..... –40°C
Normal operation (green arc) .. 45 to 115°C
Cautionary range – high temp.
(yellow arc) ..... 115 to 125°C
–40 to 45°C

Oil Pressure

Minimum allowable (red radial) ..... 40 psi
Normal operation (green arc) .. 55 to 65 psi
Cautionary (yellow arc) ..... 40 to 55 psi

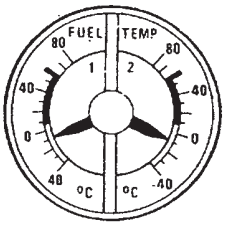

FUEL TEMPERATURE INDICATOR (8)

Dual indicator (left side engine 1, right side engine 2) indicates fuel temperature at engine driven fuel pump inlet (after heating) as sensed by temperature sensor.

Range Marks:

Maximum allowable (red radial) ..... 57°C
Normal operation (green arc) ... 11 to 57°C
Cautionary – low temp.
(yellow arc) ..... –40 to 11°C

Engine instruments

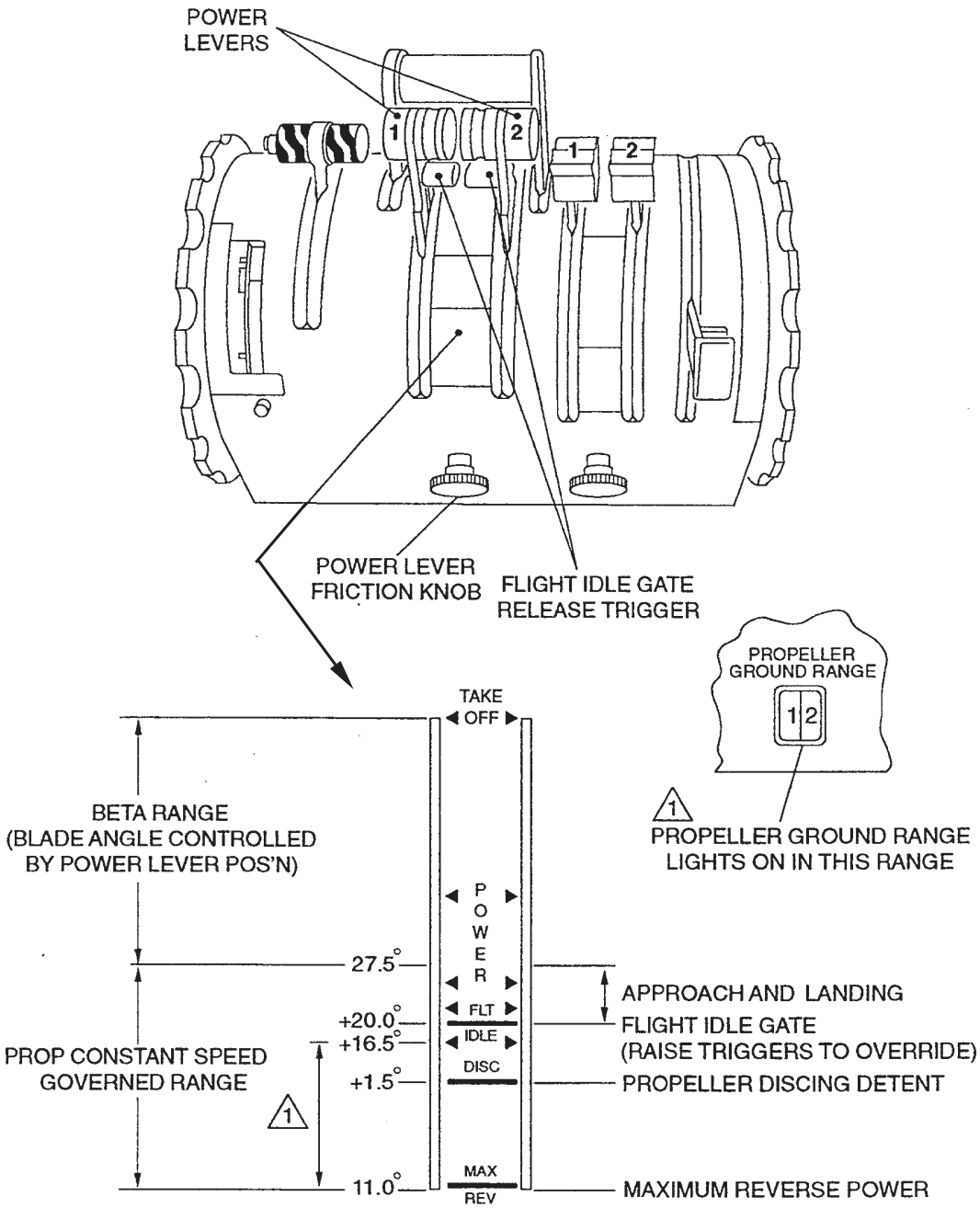

Power lever positions

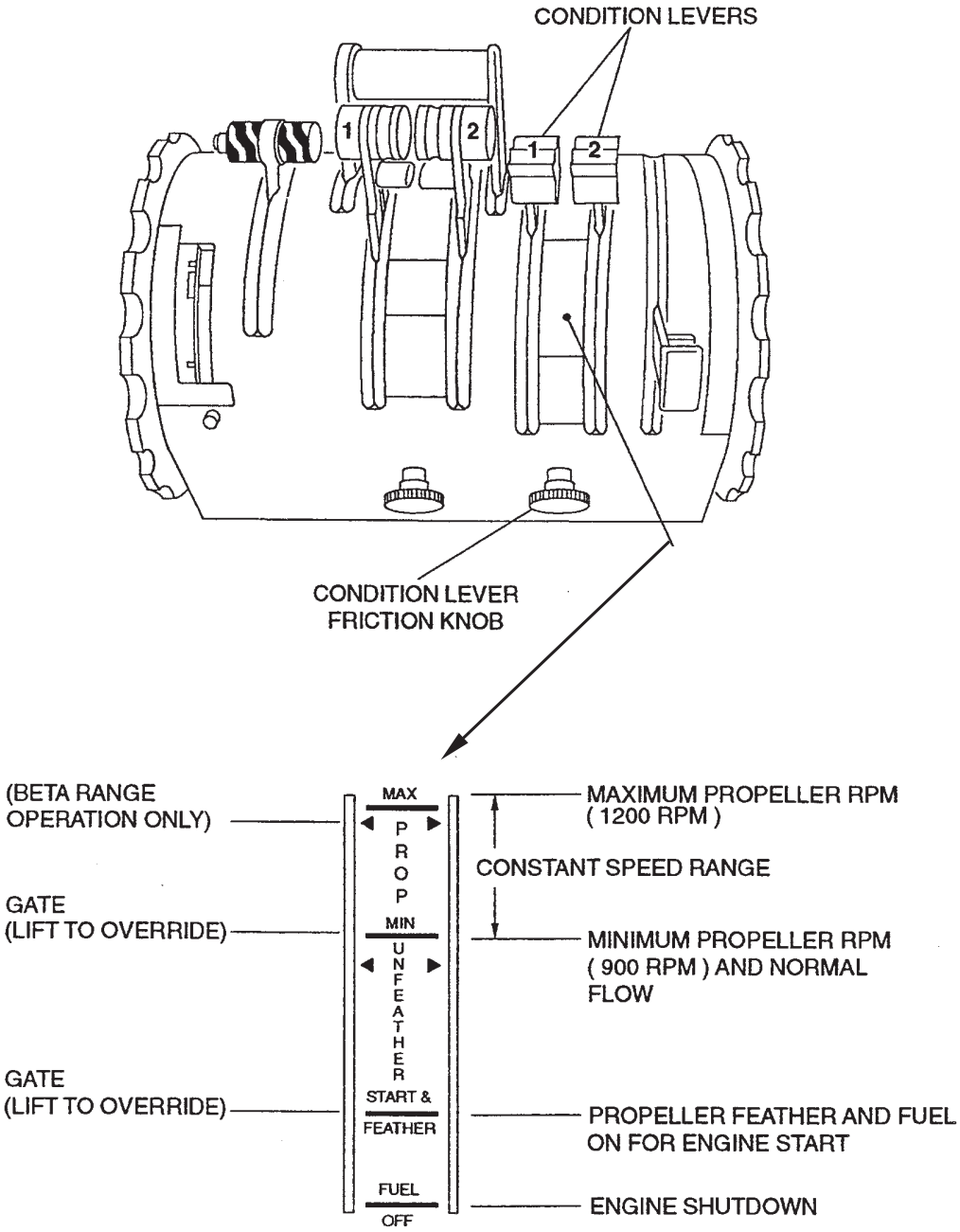

Condition lever positions

SYSTEM DESCRIPTION

Two Pratt & Whitney P&W 123E series, free turbine turboprop engines are installed on the Dash 8-Q315. The engines develop a normal take-off power rating of 2140 SHP. An automatic power uptrim feature allows either engine to develop up to 2380 SHP for brief periods following an opposite engine failure during take-off.

The engine features a two-spool gas generator consisting of a low pressure (first stage) and high pressure (second stage) centrifugal compressor, each driven independently by single stage axial turbines on coaxial shafts. A two-stage free power turbine aft of the compressor turbines drives the propeller via a third shaft running forward through the low pressure compressor rotor to a propeller reduction gearbox at the front of the engine. An exhaust pipe is connected to the engine tailpipe and ducts engine exhaust to the rear of the nacelle.

An accessory gearbox is driven by the high-pressure compressor rotor to operate the engine-driven fuel pump, an oil pump and the DC starter/generator. For engine starting, the starter/generator drives the gearbox to accelerate the high-pressure rotor to the necessary speed.

Other accessories are driven by the propeller reduction gearbox. These include a propeller overspeed governor, propeller control unit oil pump, the hydraulic system main pump and the 115-volt variable frequency AC generator and the propeller control unit (PCU).

The propeller is a Hamilton standard 14-SF-23 four blade, feathering, reversible constant speed unit. The foam-core/fibreglass blades, bonded to solid aluminium spars, are affixed to an alloy hub and have molded-in erosion sheaths and anti-icing heater elements. A double-acting (hydramatic) pitch change mechanism in the hub receives engine oil supplied via the PCU to control blade angle. The PCU provides for governed constant speed operation, power lever controlled beta range (idle to full reverse) and feather modes.

The selectable control modes in which the engine fuel control systems operate are MANUAL and ON.

Manual fuel control is relative to power lever angle (PLA) and condition lever angle (CLA) setting, applied mechanically by the associated power lever and condition lever of the engine control system to the mechanical fuel control (MFC).

When selected to ON fuel control transmits PLA and CLA through potentiometers to an electrical torque motor on the MFC. The ECU also receives and computes applicable engine parameters and ambient conditions (air data computer information), which vary, input movement to the MFC for optimum fuel scheduling.

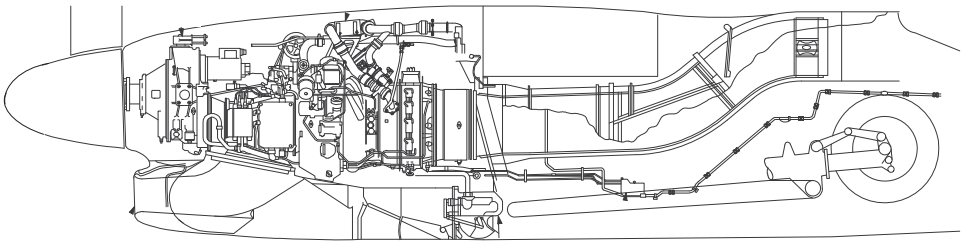

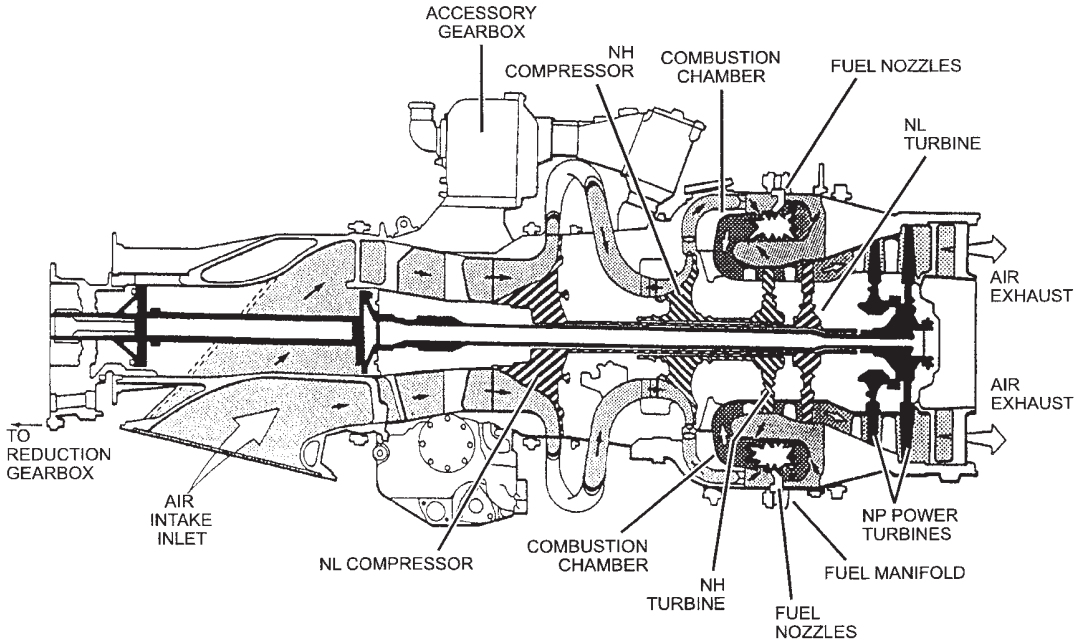
ACCESSORY GEARBOX
NH COMPRESSOR
COMBUSTION CHAMBER
FUEL NOZZLES
NL TURBINE
AIR EXHAUST
AIR EXHAUST
TO REDUCTION GEARBOX
AIR INTAKE INLET
NL COMPRESSOR
COMBUSTION CHAMBER
NH TURBINE
FUEL NOZZLES
FUEL MANIFOLD
NP POWER TURBINES

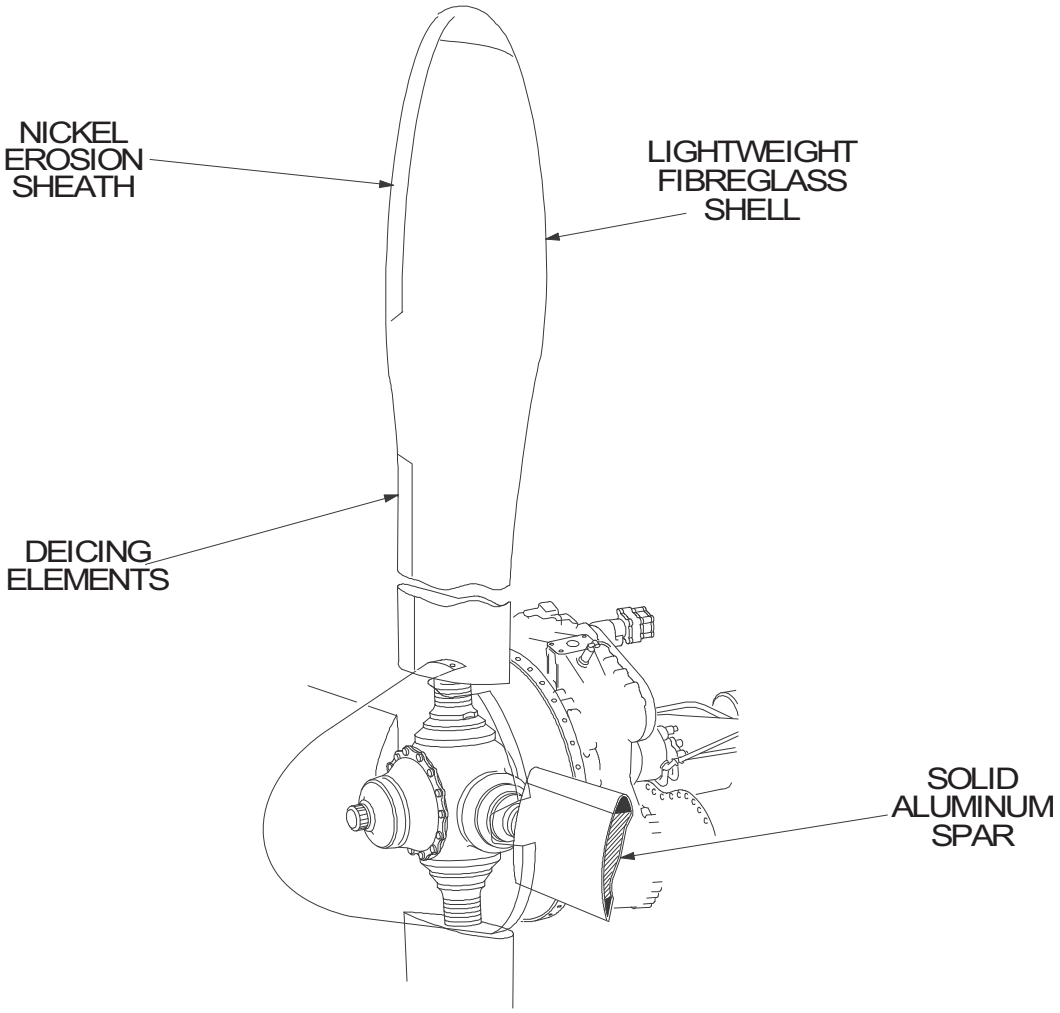
NICKEL
EROSION
SHEATH
LIGHTWEIGHT
FIBREGLASS
SHELL
DEICING
ELEMENTS
SOLID
ALUMINUM
SPAR

Engine controls

Power Levers

The two power levers, marked 1 and 2, control engine speed in the forward power range and engine speed and propeller blade angle in the idle through reverse beta range.

For normal flight operation in the forward thrust range propeller blade angle is controlled by a governor in the PCU, which regulates propeller speed (N_p) in response to condition lever settings. Engine power is controlled by the power lever. As the power levers are retarded to FLT IDLE, with the condition levers at MAX, the PCU governor reduces blade angle as it attempts to maintain the selected propeller RPM. As blade angle reduces to + 27.5º (at a point slightly above FLT IDLE), the power lever acquires direct blade angle control (beta range). At FLT IDLE, propeller blade angle decreases to + 20.0º.

NOTE: For descriptive reasons, the beta range of power lever movement above FLT IDLE is designated 'flight beta' (useable while airborne) and the beta range between FLT IDLE and MAX REV 'ground beta' (useable only while on the ground).

A FLT IDLE gate prevents unintentional movement into the ground beta region. The gate is overridden by raising gate release triggers below the handgrips, allowing the power lever to be moved further aft until a spring detent labelled DISC is reached. Through this range, propeller blade angle decreases from + 20.0º to + 1.5º (discing).

Further power lever movement aft moves the blades into reverse until the power levers reach MAX REV where the blade angles are set at - 11.0º.

While in beta range, the mechanical fuel control unit (MFC) and the electronic control unit (ECU) regulate power to provide propeller underspeed governing in the FLT IDLE/DISC range. While in the reverse thrust range, the MFC and ECU also regulate power and propeller speed, proportional to the amount of reverse blade angle selected with the power lever.

Condition Levers

The two condition levers, located adjacent to the power levers and marked 1 and 2, set propeller RPM, in the forward thrust range and provide manual propeller feathering and fuel on/off control for engine start and shutdown. Each condition lever provides input to the MFC and PCU of the related engine.

When in the forward thrust (constant speed) range, the position of the condition lever sets propeller RPM through input to the governor in the PCU. At MAX, propeller RPM is governed at approximately 1200. Moving the lever aft reduced governed RPM until at MIN RPM is approximately 900.

Moving the condition lever to START & FEATHER feathers the propeller and disables the propeller underspeed governing to allow 'ground idle' engine operation. Moving the lever to FUEL OFF cuts off all fuel flow to the engine. Lift gates at the MIN and START & FEATHER positions prevent unintentional movement of the condition levers from MIN to START & FEATHER and from START & FEATHER to FUEL OFF.

Quiet taxi mode

A ‘quiet taxi’ mode can be initiated while the engine is in the beta range to reduce propeller noise. Select the quiet taxi mode by positioning the condition levers at MIN and the power levers at FLT IDLE. The MIN selection actuates a microswitch in the condition lever quadrant that provides a ‘quiet taxi’ signal to the ECU. This modifies the ECU's reverse beta fuel schedule to eliminate the N_p rise with power that normally occurs when making reverse power selections while taxiing, with the resultant surges in noise. When ‘quiet taxi’ is in effect, the ECU limits high-pressure compressor rotor speed (N_h) to that required maintaining propeller RPM at the 785 RPM N_p underspeed governing limit throughout the reverse thrust power lever range. Quiet taxi mode is removed when the condition levers are moved back to MAX.

Power uptrim mode

Each ECU features a power uptrim mode during take-off, which automatically increases power output of non-affected engine up to a maximum take-off rating of 2380 SHP in response to ECU autofeather command. The power uptrim occurs 3 seconds prior to propeller autofeather and is indicated by a PWR UPTRIM advisory light on the engine instrument panel.

When the ECU of the non-affected engine receives the uptrim signal, the PWR UPTRIM light is illuminated and the fuel schedule increases above that selected by the power lever to provide power uptrim. Prior to initiating propeller autofeather of the affected engine, an ‘NP underspeed fuel governing cancel’ signal is received by the ECU. This ‘fuel governing cancel’ signal permits the feathering propeller to decrease RPM through an underspeed condition to a feather blade angle. The reduced fuel schedule prevents an overtorque condition during propeller blade angle toward feather. Deactivation of the autofeather system after take-off removes the uptrim signal; the PWR UPTRIM light extinguishes and the ECU returns its engine to the original power setting.

Engine ECU

The engine ECU receives PLA, CLA, SCU, engine parameters and air data computer information. The ECU computes this information and supplies correction signals to the MFC torque motor. This system allows optimum fuel scheduling under varying engine ambient and

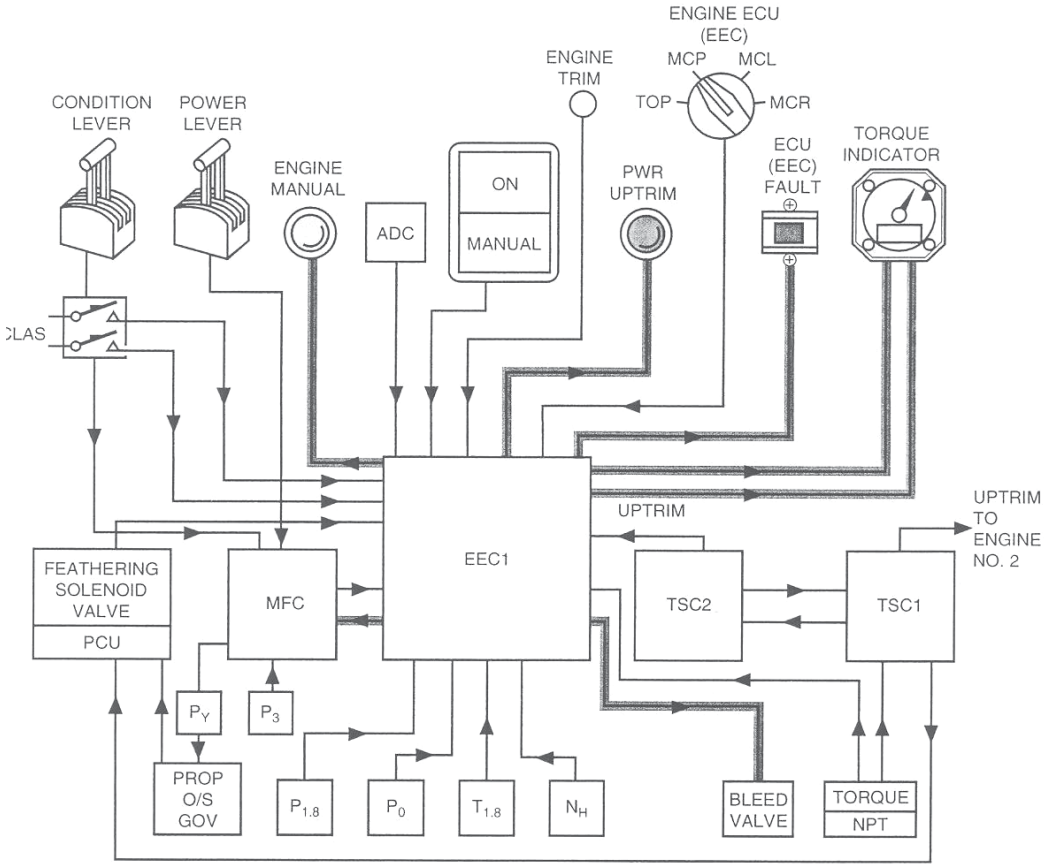

LEGEND

MFC—MECHANICAL FUEL CONTROL
PCU—PROPELLER CONTROL UNIT
EEC—ENGINE ELECTRONIC CONTROL
TSC1—TORQUE SIGNAL CONDITIONER (NO. 1 ENGINE)
TSC2—TORQUE SIGNAL CONDITIONER (NO. 2 ENGINE)
P_0—AMBIENT PRESSURE
$P_{1.8}$—TOTAL INLET PRESSURE
☐ INPUTS

$T_{1.8}$—TOTAL INLET TEMPERATURE
N_H—HIGH-PRESSURE ROTOR SPEED
CLAS—CONDITION LEVER ANGLE SWITCHES
ADC—AIR DATA COMPUTER
P_3—HIGH-PRESSURE COMPRESSOR AIR
N_{PT}—POWER TURBINE SPEED
P_Y—MFC AIR PRESSURE
■ OUTPUTS

Operating conditions.

Engine fuel control on, MANUAL and reversion

When fuel control is ON and an ECU fault occurs the fuel system goes into reversion. The #1 ENG MANUAL or #2 ENG MANUAL caution light located on the caution light panel will illuminate. The fuel scheduling is fixed at the point of ECU fault and torque will remain as last selected by the power lever. Fuel schedule will then be under MANUAL (MFC) control and the fuel schedule will be as selected by power lever movement.

Selection of the ENG #1 or ENG #2 ECU MODE selector to MANUAL, will cause the respective MODE selector to illuminate MANUAL. Also, #1 ENG MANUAL or #2 ENG MANUAL caution light will illuminate. The fuel control system will be under MFC control.

A selection of the ENG #1 or ENG #2 ECU MODE selector to ON will cause the applicable ECU to resume fuel scheduling.

The MFC incorporates provisions for the manual control of the fuel schedule. These provisions consist of a solenoid valve in each MFC, controlled by a reversion relay and related circuits. The MFC solenoid is de-energized and control of the fuel scheduling is set by the MFC. In MANUAL control underspeed fuel governing is not provided.

Manual fuel scheduling is controlled by power lever angle (PLA) and condition lever angle (CLA) settings. The PLA settings provide fuel demands and control the propeller blade angle in the beta range. The CLA settings provide for fuel on/off control and manual selection of the propeller to FEATHER.

The manual operating mode provides all requirements for engine operation, but does not supply automatic control functions associated with ECU control (i.e. control of fuel flow by ECU inputs to MFC, propeller N_p underspeed governing and N_h low speed limiting, which includes quiet taxi mode and handling speed off valve (HBOV) control.

CAUTION: On landing do not retard POWER lever below DISC. After landing maintain propeller speed (N_p) above 785 RPM and high-pressure turbine speed (N_h) above 66%. If unable, feather propeller after landing is complete and taxi aircraft on remaining engine.

Propeller control

The propeller is controlled by the propeller control unit (PCU) operating in conjunction with an overspeed governor, an autofeather system, an alternate feather system, a propeller synchrophase system and the power and condition levers.

The PCU provides for governed, constant speed operation through a flyweight governor controlled by the condition lever; beta range operation by the power lever; and propeller feathering modes by the condition lever or the autofeather/alternate feather systems. An overspeed governor provides overspeed protection in the constant speed, flight beta range and ground beta range (by acting on the MFC to limit N_H).

The PCU is mounted on the propeller reduction gearbox. It controls propeller blade angle by metering engine oil to one side of the pitch change mechanism in the hub to reduce blade angle (fine), which is opposed by constant oil pressure supplied to the mechanism to increase blade angle (coarse). A PCU hydraulic pump, mounted with the overspeed governor on the reduction gearbox, boosts engine oil supply pressure to the PCU.

All propeller blade angles are achieved by the controlled metering of oil pressure in the constant speed and beta modes and the dumping (to the sump) of pressure in the feather or propeller overspeed modes. Aerodynamic loads on the propeller tends to drive the blades to low blade angles. Should the supply of oil pressure to the PCU be lost, a pitchlock feature, incorporated into the pitch change mechanism, engages to prevent aerodynamic loads from reducing blade angle more than 1 degree and propeller speed increasing more than 2% from the point of oil pressure loss.

Constant speed mode

When the power levers are in the forward thrust range, condition lever input to the propeller governor between MIN and MAX sets propeller RPM by adjusting spring pressure on a set of internal governor flyweights. The set propeller RPM is maintained by the speed sensing flyweights metering oil pressure in order to adjust blade angle as required to maintain the set RPM.

Beta mode

When the propeller is in beta mode, blade angle is set by power lever input to a beta cam in the PCU. The beta cam actuates the reverse valve and the beta-metering valve. The beta-metering valve also receives mechanical blade angle feedback inputs.

As power is reduced in the forward power range sufficient for propeller speed to drop below the governor setting, the governor admits full oil pressure to reduce blade angle in an attempt to maintain the set RPM. As beta range is entered, blade angle is now controlled by bleeding off varying amounts of oil pressure to the sump via the beta-metering valve. A certain amount of bleed-off holds blade angle; bleeding off less reduces blade and bleeding off more increases blade angle.

In beta range, moving the power lever increases or decreases oil pressure bleed-off to move the blades in the required direction. When blade angle has increased or decreased to the new angle set by the power lever, the blade angle feedback acts on the beta-metering valve to hold the blades at the new position. Blade angle is controlled in this way throughout the power lever beta range from the entry point slightly above FLT IDLE (where blades are set at + 27.5º) through to MAX REV (blades set at -11.0º)

Autofeather system

Autofeather is selected for take-off only and the system is active (armed) only when the torque of both engines exceeds approximately 38% and both power levers are advanced to meet PLA/OAT requirements.

The autofeather system, when selected, provides automatic propeller feathering and non-affected engine power uptrim following a propeller feather condition after engine failure during take-off. Autofeather logic and control circuits operate in conjunction with a signal condition unit (SCU).

A single SELECT/ARM switchlight on the lower right engine instrument panel selects or deselects the system and indicates whenever system is armed.

Each SCU compares torque inputs from a sensor on each engine. Autofeather is triggered when an armed SCU detects failure of its associated engine by a decrease of torque below approximately 28%, with the opposite engine at greater than approximately 38%. The triggered SCU immediately energizes a power uptrim signal to the ECU of the opposite (non-affected) engine to initiate 'power uptrim' fuel schedule and illuminate the PWR UPTRIM advisory light. The non-affected engine bleed air system is shutdown.

After a 3 second delay, the SCU initiates autofeathering of the low torque (affected) engine. An 'N_P underspeed fuel governing cancel' signal to the failed engine ECU permits propeller operation below the propeller minimum speed (785 RPM), without the possibility of propeller/engine overtorque. An auxiliary pressure pump is energized and runs for approximately 18 seconds to provide adequate time for propeller feathering before automatically shutting off. An advisory light for the pump illuminates while the auxiliary feathering pump is energized.

Once the autofeather sequence for one of the propellers is initiated, interlock features prevents autofeather of a second propeller.

The system can be disarmed and deactivated by pressing the SELECT/ARM switchlight, retarding both power levers to FLT IDLE or by both engine torque levels dropping below approximately 38%.

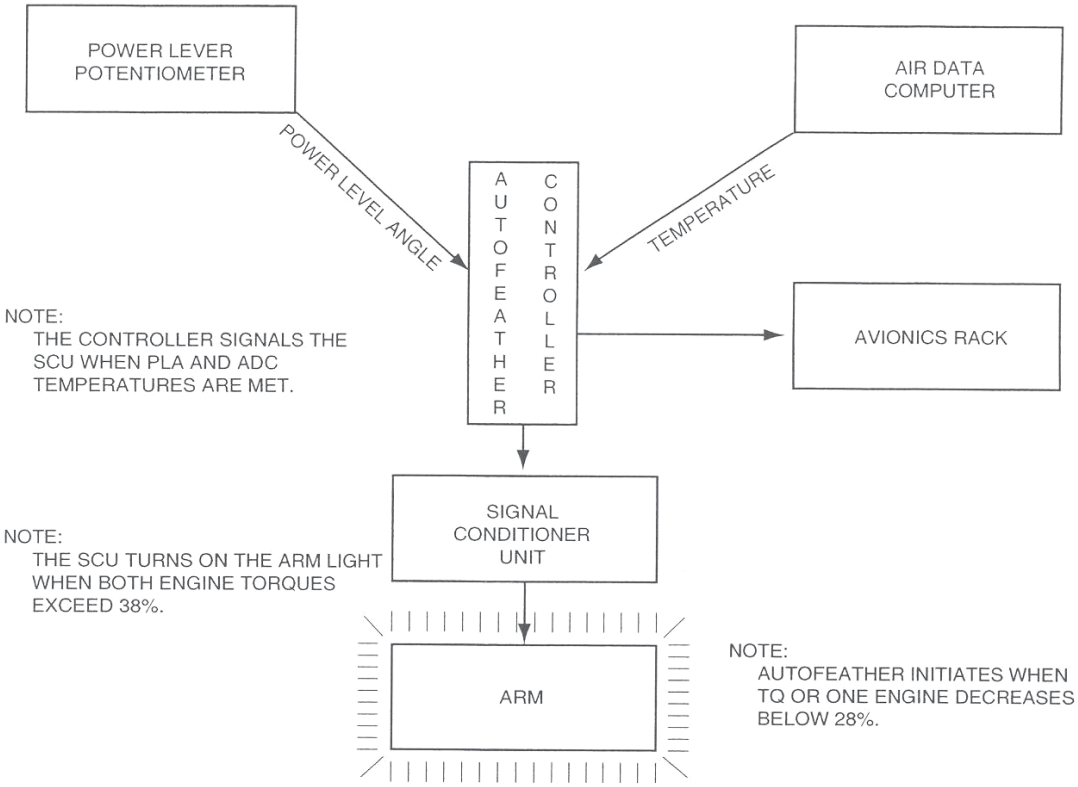
POWER LEVER POTENTIOMETER
AIR DATA COMPUTER
POWER LEVEL ANGLE
TEMPERATURE
AUTOFEATHER CONTROLLER
NOTE:
THE CONTROLLER SIGNALS THE SCU WHEN PLA AND ADC TEMPERATURES ARE MET.
AVIONICS RACK
SIGNAL CONDITIONER UNIT
NOTE:
THE SCU TURNS ON THE ARM LIGHT WHEN BOTH ENGINE TORQUES EXCEED 38%.
ARM
NOTE:
AUTOFEATHER INITIATES WHEN TQ OR ONE ENGINE DECREASES BELOW 28%.

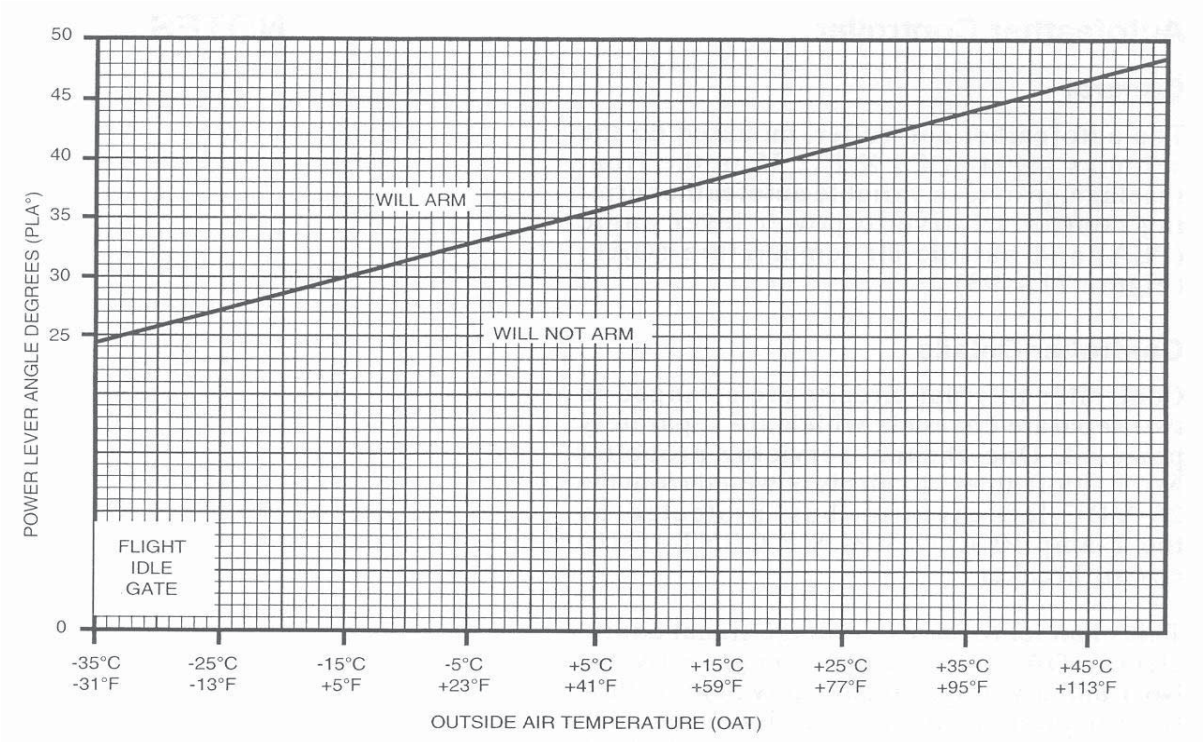
POWER LEVER ANGLE DEGREES (PLA°)
50
45
40
35
30
25
0
WILL ARM
WILL NOT ARM
FLIGHT IDLE GATE
-35°C -31°F
-25°C -13°F
-15°C +5°F
-5°C +23°F
+5°C +41°F
+15°C +59°F
+25°C +77°F
+35°C +95°F
+45°C +113°F
OUTSIDE AIR TEMPERATURE (OAT)

Alternate feather system

The alternate feather system provides a back-up means of manually feathering and unfeathering a propeller in the event in-flight condition lever selections have failed to achieve full propeller feathering/unfeathering.

Alternate feathering/unfeathering can be performed with the engine running or shut down and with or without engine oil pressure. The power lever must be above the FLT IDLE gate and the condition lever above the ground beta range to initiate alternate feathering. Alternate feathering of an engine with the autofeather system armed also initiates power uptrim of the non-affected engine.

The system consists of alternate feather control circuits interconnected with the feather solenoid valve, the auxiliary feathering pump and the ECU of each engine. Two alternate feather switches on the engine instrument panel with positions NORMAL, ALTERNATE FEATHER (leverlocked) and UNFEATHER (magnetically latched), control system operation for each propeller.

The actions and results of an ALTERNATE FEATHER selection are basically similar to autofeathering. Signals are supplied to open the feather solenoid valve and to energize the auxiliary feathering pump of the selected engine to feather its propeller (ALTERNATE FEATHER advisory light illuminates).

At the same time an 'N_P underspeed cancel' signal is supplied to the ECU to prevent engine fuel flow response as propeller RPM decays below 785. If the autofeather system is on, energizing of the feather solenoid valve also supplies a 'power uptrim' signal directly to the ECU of the opposite engine (PWR UPTRIM light does not illuminate). The above conditions are maintained (except for the auxiliary feathering pump which times-out after approximately 18 seconds) as long as the ALTERNATE FEATHER selection is maintained. Returning the switch to NORM de-energizes the feather solenoid valve, resets the auxiliary feathering pump timer circuits and removes the N_p underspeed fuel governing cancel and power uptrim signals.

If, during an airstart of the engine, the propeller fails to move out of feather upon moving the condition lever out of START & FEATHER, the ALTERNATE FEATHER switch is selected to UNFEATHER. An UNFEATHER selection energizes the related auxiliary feathering pump (adjacent advisory light illuminates) which runs for approximately 18 seconds to provide supplemental oil pressure to unfeather the propeller. The switch is magnetically held at the UNFEATHER position until the pump shuts off after 18 seconds at which time the switch automatically releases to NORM (advisory light goes out).

Propeller synchrophase system

The propeller synchrophase system synchronizes both propeller speed and phase angle (relative blade position) of the two propellers in cruise flight. Synchrophasing is achieved by matching the speed and phase of number 2 propeller (slave) to that of the number 1 propeller (master).

A synchrophase control unit monitors speed and phase of both the master and slave propellers using signals from pulse generators at each propeller hub. The control unit compares the signals and applies an output signal to a torque motor on the slave (number 20 propeller's PCU constant speed governor. The torque motor has authority to modify the governor's condition lever speed setting within a limited range as required to increase or decrease number 2 propeller's RPM until speed and phase angle is matched with number 1 propeller.

The system is activated by a SYHCNROPHASE switch on the right glareshield panel. An adjacent advisory light illuminates to indicate the system is active.

NOTE: The synchrophase system is for use in climb, cruise and descent only.

Due to limited authority of the synchrophase torque motor, the propellers must be manually synchronized to within 20 RPM of each other before the synchrophase system is activated.

Feather mode

Feather mode is initiated either by the manual feathering valve, which is opened by condition lever START & FEATHER selection, or by a feather solenoid valve, which is opened normally by the autofeather/alternate feather system. When either valve is opened the propeller feathers regardless of the state of the propeller governor or the reverse and beta metering valves.

Propeller ground range indication and BETA backup protection

Advisory lights are provided on the left glareshield panel to indicate that the propellers are in the ground range of beta operation. Marked PROPELLER GROUND RANGE 1 and 2, each light is illuminated by a low blade angle switch that is actuated by the blade angle mechanical feedback mechanism. Illumination occurs when blade angle is decreasing through +16.5º. A beta backup system provides protection against the propeller entering beta ground range unintentionally due to a PCU malfunction (while the power lever is above ground range). The system uses a beta back up signal, supplied by the low blade angle switch, which is relayed to the feather solenoid valve via a power lever-operated microswitch. The microswitch will relay the beta backup signal only when the power lever is above the ground range position.

In the event the propeller enters ground range with the power lever above the ground range setting, the beta backup signal supplied by the low blade angle switch is relayed to energize open the feather solenoid valve, causing the propeller to begin feathering until blade angle increases past the ground range point. The low blade angle switch then closes the feather solenoid valve, restoring the original condition. The result is a continuous cycling in and out of propeller ground range, accompanied by on/off flashing of the related PROPELLER GROUND RANGE indicator light, until the cause of the fault is rectified. Provision is made to test beta backup function and to check serviceability of the power lever-operated microswitch by means of BETA BACKUP TEST switches on the pilot's side console panel.

Propeller overspeed governing

The propeller overspeed governor, mounted with the PCU hydraulic pump on the propeller reduction gearbox, incorporates both a hydraulic section to provide overspeed governing in constant speed and flight beta range and a pneumatic section to provide overspeed governing in ground beta range.

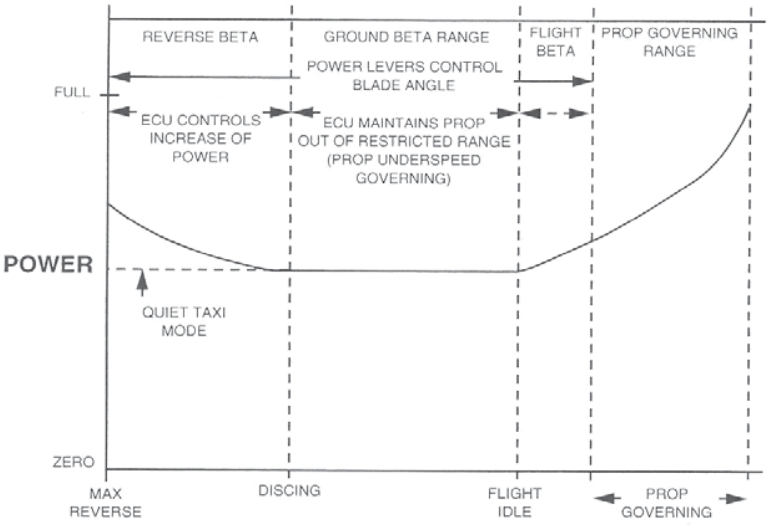

POWER LEVER POSITION

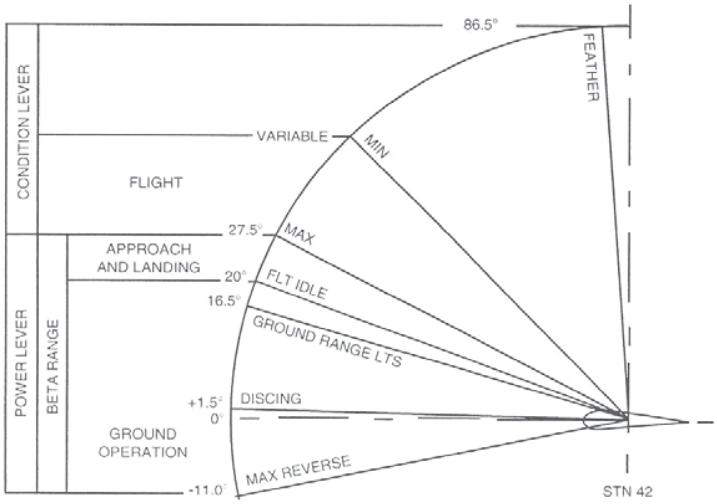

PROPELLER BLADE ANGLE

.Engine ignition system

Each engine incorporates an ignition system consisting of two exciter units connected by high-tension cables to two igniter plugs in the combustion chamber. For engine starting, the system is activated and deactivated automatically by the engine start control circuits during the start sequence (AUTO mode). For take-off, landing and flight into precipitation or turbulence, the system can by activated manually to provide continuous ignition (MANUAL mode) for flameout protection.

Operational mode of the ignition system is determined by the position of the appropriate IGNITION 1 or 2 switch on the ENGINE START panel. Each switch has positions marked MANUAL for manual (continuous) mode operation, AUTO for normal (automatic) mode operation and OFF. The OFF position isolates the exciter unit from its power supply (the related essential DC bus) to prevent activation of the ignition and is used for dry motoring the engine with the starter.

With the ignition switches in AUTO, automatic relight will occur when the N_H drops below 60 % and the condition lever is not in FUEL OFF. The igniters will operate continuously as long as the N_H is below 60%.

CAUTION: With the Condition Lever out of FUEL OFF, the DC electrical system powered and the ignition switch in AUTO, the ignition is operating. This condition may cause instant light-up of the engine, resulting in severe damage.

Engine start system

Engine starting is accomplished using the starter/generators in conjunction with the ignition and fuel control systems. The start control circuits control starter/generator operation through the generator control units (GCU's), and provide automatic ignition activation and deactivation. Fuel supply is initiated manually by condition lever selection at the appropriate time in the start sequence.

The start control circuits for both engines are armed by a single lever-locked SELECT arming switch on the ENGINE START panel and activated by the START switchlight. The start sequence begins with the condition levers at FUEL OFF and the SELECT switch positioned at 1 or 2, depending on the engine to be started. The 1 or 2 selection arms the start control circuits and the start mode circuits in the related GCU. The switch is magnetically held at the selected position by the armed start control circuits until completion of the sequence. Arming of the control circuits is confirmed by illumination of the SELECT lens of the adjacent START switchlight.

The start sequence is then initiated by pressing the START switchlight (START lens illuminates). The start control circuits signal the GCU to commence engine spool up and energizing the ignition system (if in AUTO mode). The GCU connects the starter/generator to its main feeder bus through the main bus contactor to energize the start section and begin driving the high-pressure compressor rotor. As the starter/generator cranks the high-pressure compressor rotor through 10% N_H, the condition lever is selected to START & FEATHER to introduce fuel and engine light up occurs. From 25% N_H the ECU is controlling fuel schedule. The ECU automatically accelerates the engine to the 76% N_H ground idle setting.

The start sequence automatically terminates as the engine accelerates through 63% N_H, at which time the ignition is deactivated and the starter/generator is switched to generator mode operation by its GCU. As the start control circuits are disarmed, the SELECT switch is released to the locked position and the START lens of the START switchlight goes out. A time delay relay maintains illumination of the SELECT lens for a further 2 seconds after start circuit release.

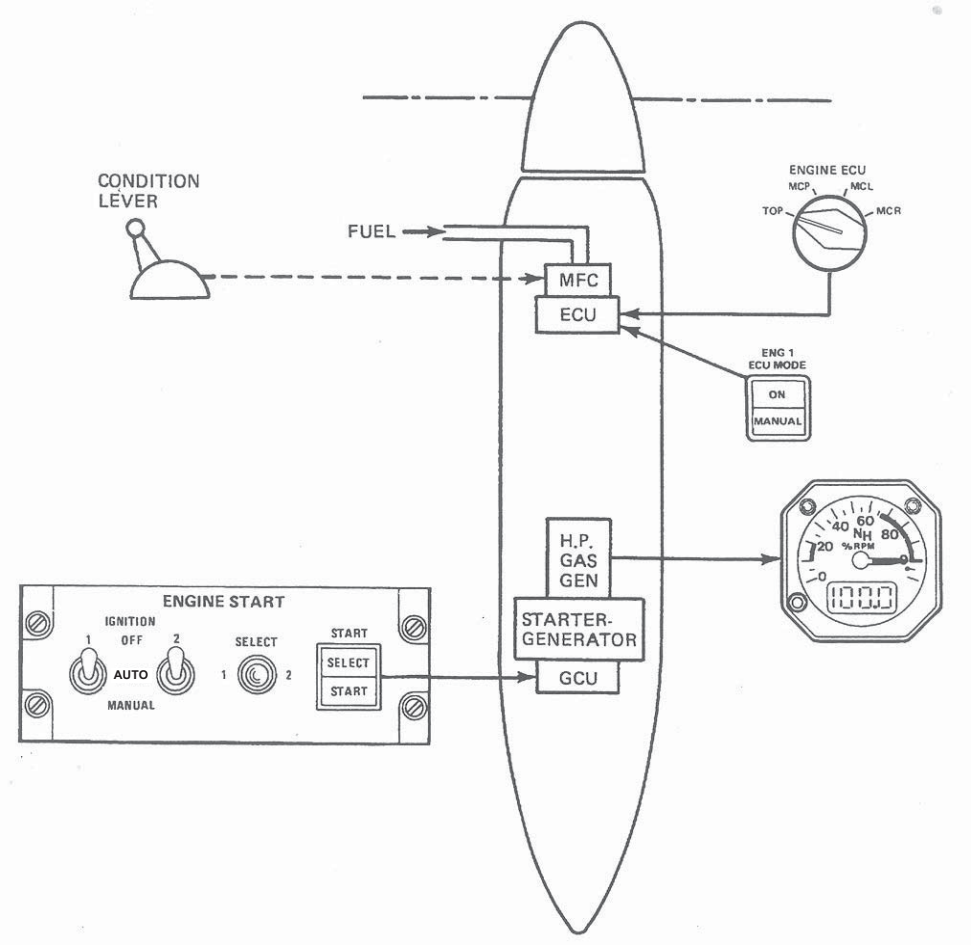

Engine start schematic

Engine fuel system

General

Fuel for engine feed is drawn from the collector bay and delivered under pressure to the mechanical fuel control unit (MFC) of the engine. Each engine fuel supply is heated and filtered before entering the engine driven pump. If the fuel filter is restricted or blocked, fuel will bypass the filter to supply the engine. This will illuminate the #1 or #2 FUEL FLTR BYPASS caution light. The fuel is heated by hot engine lubricating oil passed through a heat exchange/filter unit mounted on the engine before being delivered to the engine driven fuel pumps.

Fuel control unit

Normal control over engine operation is through the scheduling of fuel flow by the electronic control unit (ECU) installed on each engine. The ECU, acting through its associated mechanical fuel control unit (MFC), controls fuel scheduling in response to inputs received from the power and condition levers. In addition, engine sensors provide engine and propeller speeds, engine torque and ambient conditions to the ECU.

The MFC may also be operated in a manual mode should ECU control not be available (ECU in REVERSION/MANUAL) or if the manual fuel-scheduling mode is selected. Control over ECU fuel schedule modes is provided by ENG ECU MODE switchlights on the engine instrument panel, one for each ECU. Each switchlight, when pressed, alternately illuminates ON (ECU fuel schedule mode selected) or MANUAL (MFC fuel schedule selected).

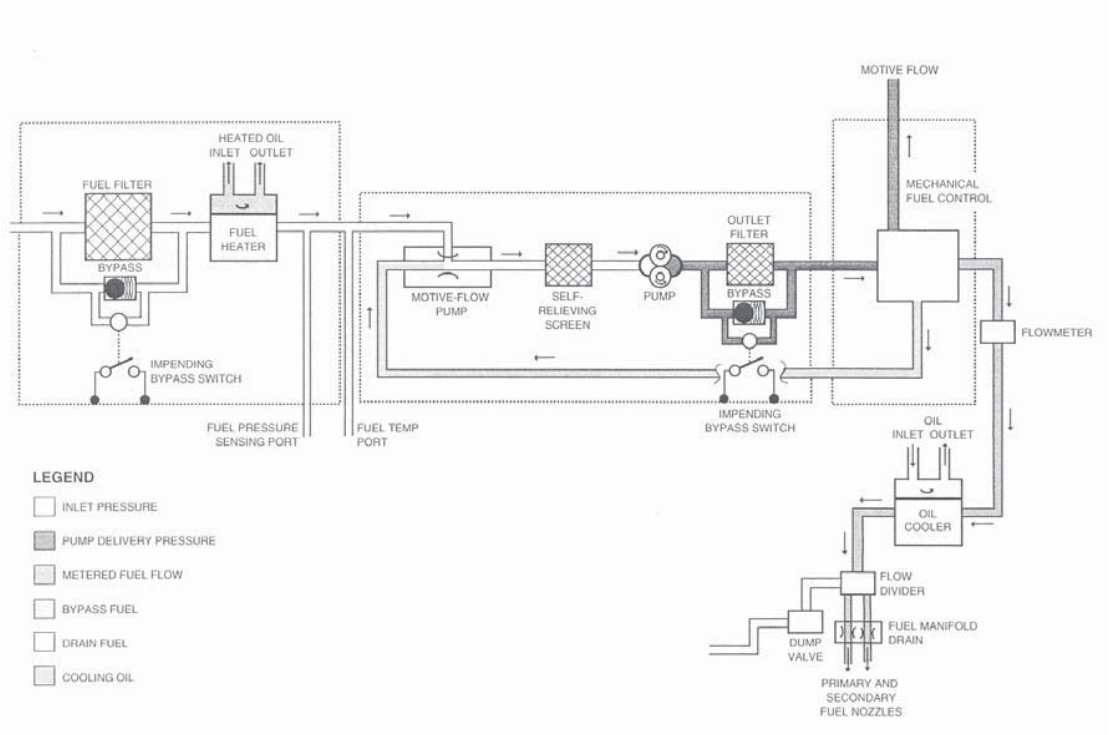

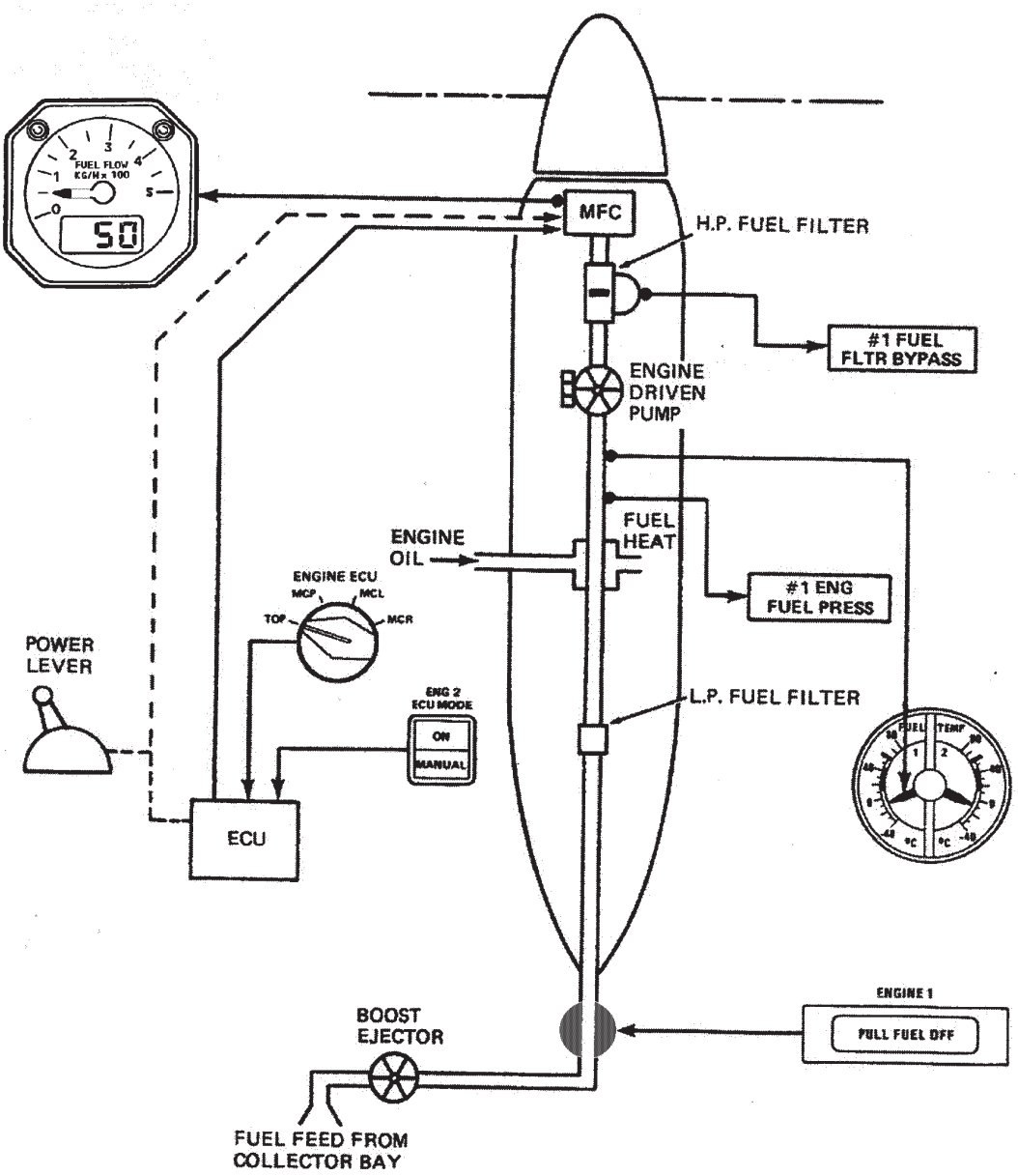

Engine fuel schematic

Engine oil system

The engine oil system provides lubrication of engine bearings and gearboxes, as well as supplying oil pressure for propeller actuation. The oil system includes an oil sump (6 U.S. gal total capacity) with sight gage that is integral with the compressor case, and a pressure pump driven from accessory gearbox that pressurizes the oil system and route it to an oil cooler. From the oil cooler oil is routed through a pressure filter and then to an engine lubricating network and the reduction gearbox-lubricating network. The engine network provides oil pressure to the fuel heater, oil low-pressure switch, oil pressure transmitter, oil temperature bulb and accessory gearbox and engine bearing cavities.

The oil low pressure switch for each engine illuminates a number 1 ENG OIL PRESS or number 2 ENG OIL PRESS warning light respectively when engine oil pressure drops below 42 ± 2 Psi. Oil temperature is controlled by the oil cooler mounted in the rear of the engine intake duct. A pressure relief and temperature regulator (thermostat) assembly in the oil cooler routes the oil through the cooler if the oil temperature is greater than 80º C or fully bypasses the oil directly to the oil cooler outlet if the oil temperature is less than 75º C.

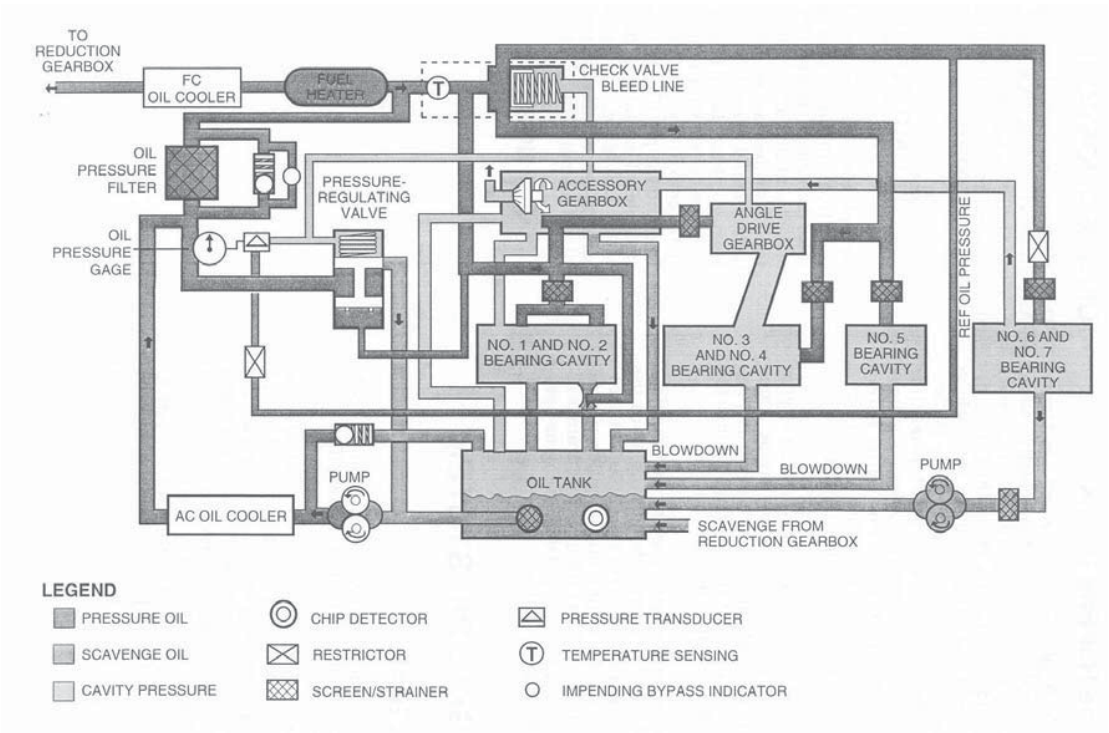

Oil system schematic

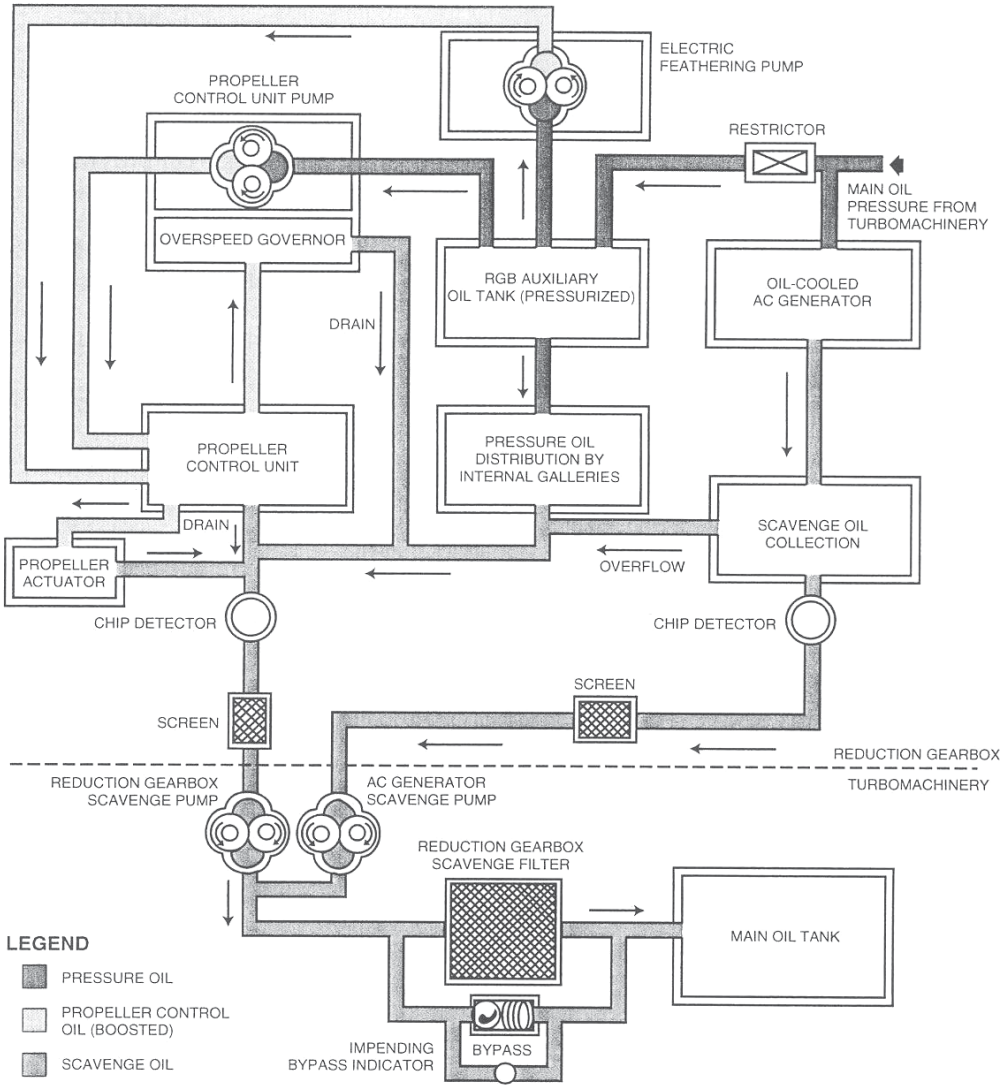

Reduction gearbox oil system schematic

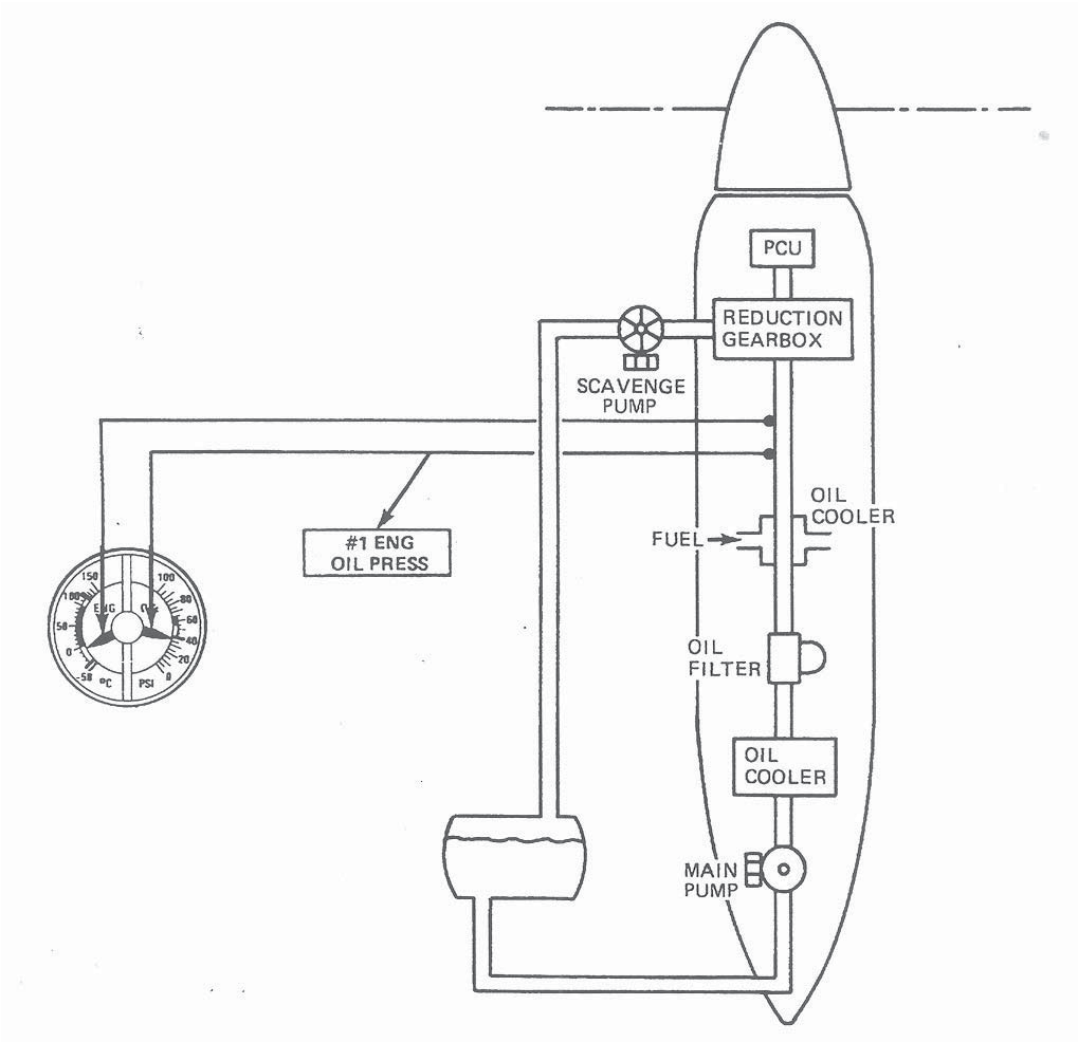

Engine oil schematic

Engine intake bypass doors

The engine intake bypass doors, one in each nacelle at the rear of the plenum, provide a means of preventing solids and precipitation from accumulating on the aft floor of the intake plenum by creating an exhaust path for solids to escape when opened by flight compartment selection. The doors are normally opened only during flight in icing conditions.

The bypass doors are box-like units hinged at the rear and retracted and extended by electric actuators. Door opening and closing is controlled by ENGINE INTAKE BYPASS DOOR switchlights on the engine instrument panel. When energized by switchlight selection, the actuator fully extends or retracts the door before switching off automatically.

A heater incorporated into the engine inlet adapter ring, which joins the compressor case inlet to the intake duct, is activated automatically when the bypass door is opened. An oil pressure switch and temperature sensor in the heater control circuit however, prevents heater activation when the engine is shutdown and/or air temperature is above 15°C.

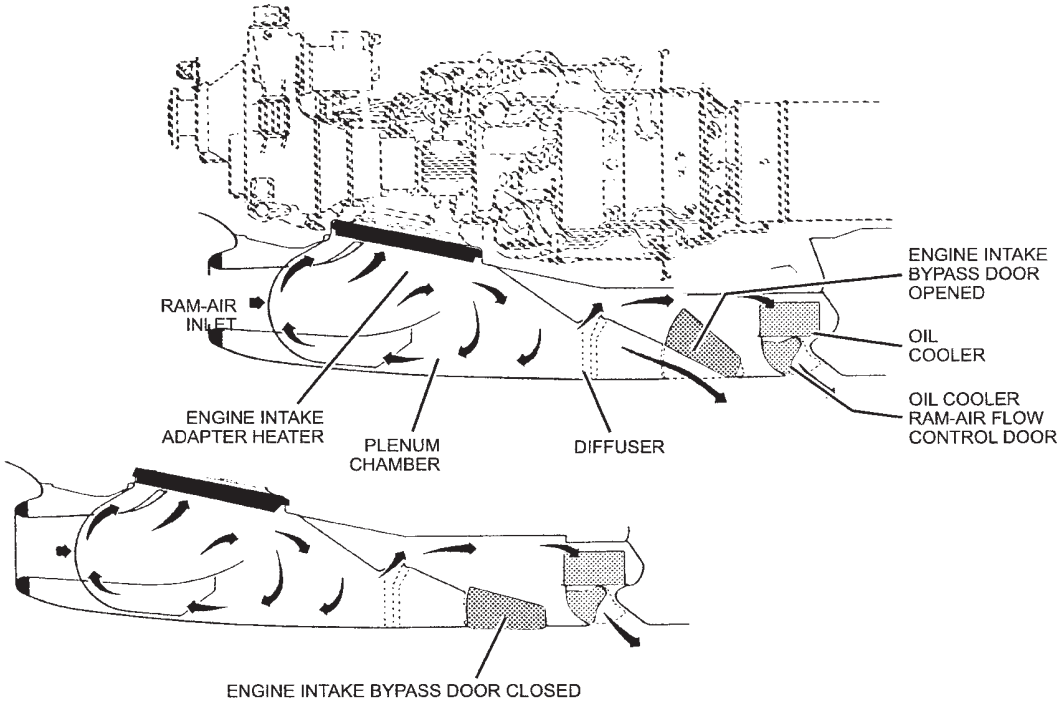

NON-NORMAL INDICATIONS AND OPERATION

Warning lights

#1 ENG OIL PRESS / #2 ENG OIL PRESS	Applicable engine oil pressure decreased below 42 ± 2 Psi.
Applicable ECL:	#1 ENG OIL PRESS or #2 ENG OIL PRESS LOW.
Remarks:	

Caution lights

#1 ENG MANUAL / #2 ENG MANUAL	Applicable engine electronic control unit failed or deactivated by manual selection on ENG ECU MODE switchlight.
Applicable ECL:	#1 ENGINE MANUAL or #2 ENGINE MANUAL.
Remarks:	With an ECU inoperative power lever positions may be asymmetric for symmetric torque. The rate of engine response to power lever movement may be faster on the side with the inoperative ECU. On landing do not retard power lever below DISC.