GENERAL

AIRCRAFT GENERAL

Outside dimensions

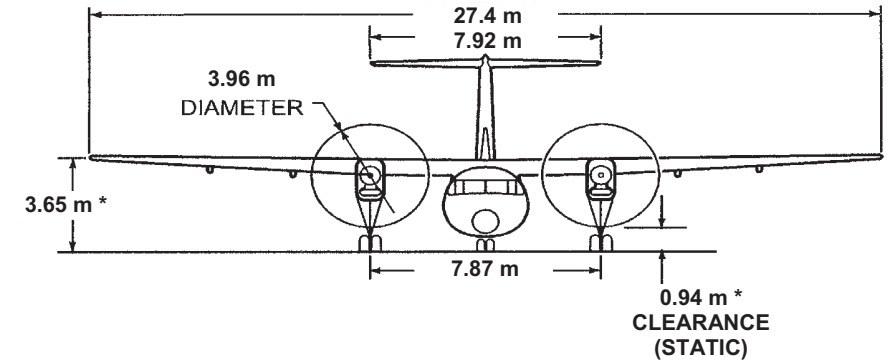

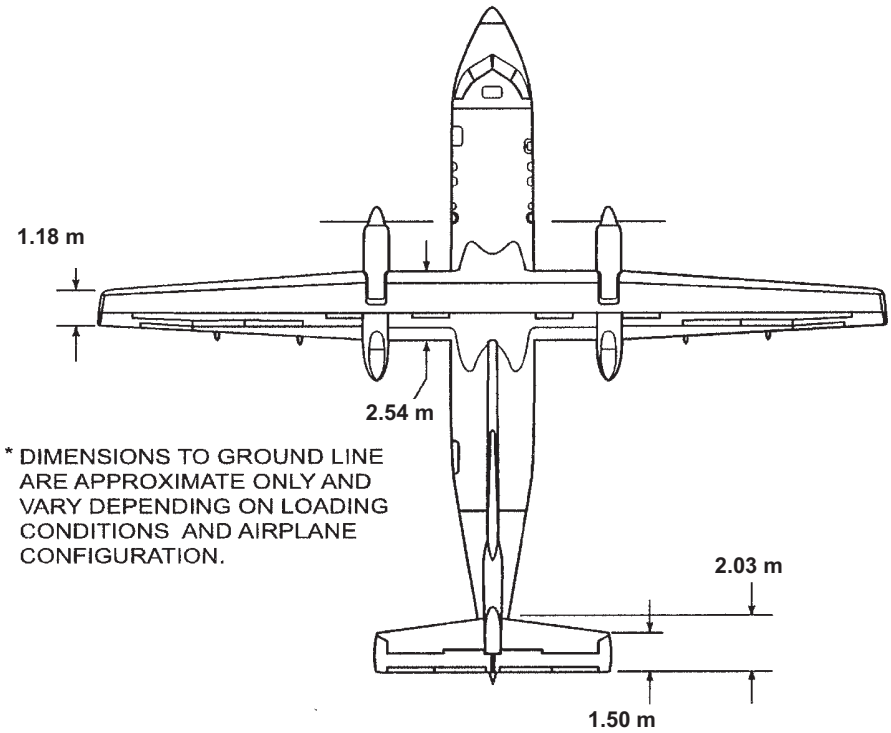

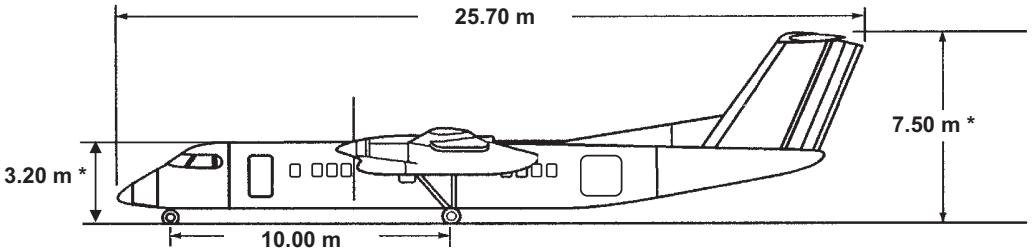

Communication and navigation antenna locations

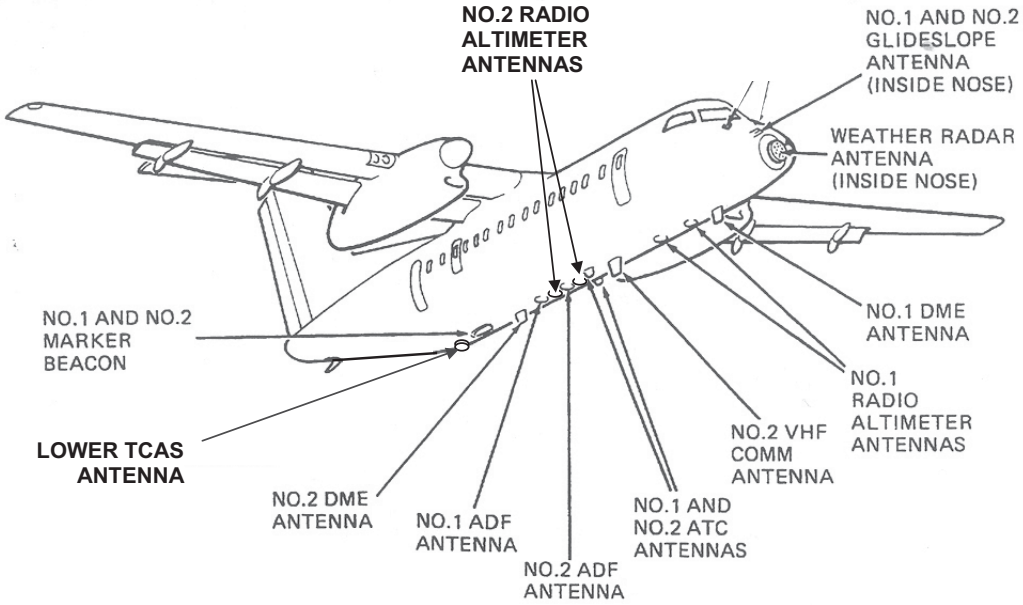

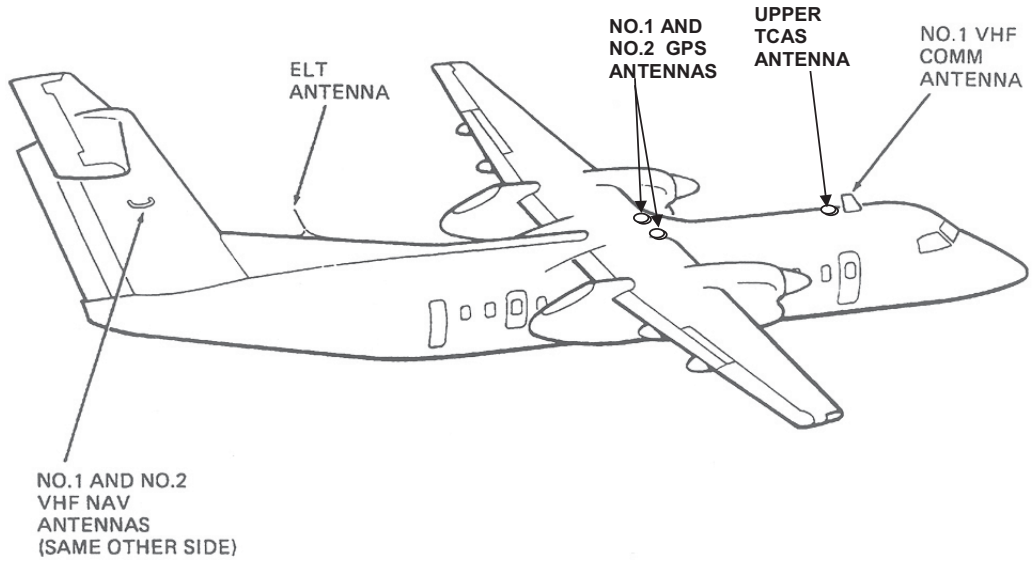

Antenna locations

Doors

Passenger door

An airstair-type passenger door is located at the forward left side of the cabin and is manually opened or closed from either inside or outside the aircraft. The door incorporates five steps and is hinged to open outward and down.

To prevent pressurization leaks between the door and the fuselage, a rubber seal surrounds the door and inflates by air pressure from the airframe de-ice system through a heated pressurization valve when the door is fully closed.

A reservoir located below the cabin floor adjacent to the door is charged to 18 psi from the airframe de-ice system providing sufficient air pressure to the door seal for approximately four door closing cycles when the aircraft is parked and both engines are shut down. The reservoir may also be pressurized from an independent air pressure source through a charging valve accessible through the forward galley equipment stowage area.

To open the door from inside the airplane, move the internal handle upwards from LOCKED to OPEN position, this deflates the seal and rotates the door upward and outboard, after which it can be lowered. To open the door from the outside the airplane, pull the recessed external handle out and down then support the door while being lowered. Reverse the procedure to lock the door from outside or inside.

Two proximity sensors incorporated with the door signal the proximity switch electronic unit (PSEU) of a door unsafe condition by illuminating the PASS DOOR warning light in the flight compartment.

A fabric curtain is installed at the airstair door to reduce draft when the airstair door is opened. The curtain is suspended from a track secured to the ceiling panel. Two fastening straps are attached to the curtain to secure the curtain in the stowed position at the draft bulkhead. The curtain must be stowed during take-off and landing.

Flight compartment entrance door

The flight compartment door is hinged by its left edge on three hinges and opens aft into the cabin. The door may be removed by means of quick release pins, which form part of the two upper hinges. The door is equipped with a lock lever on the flight compartment side to secure the door against entry from the cabin. A key is provided to open the lock from the passenger cabin side. In an emergency, the door may be removed by first lifting and locking the quick release hinge pins of the two upper hinges. Once the upper hinges are free, rotate the door aft on the pivoting lower hinge and lift the door clear of the lower hinge pin.

Baggage compartment internal access door

A door incorporated with the divider bulkhead provides access to the baggage compartment from the cabin. The door is hinged on the right side and opens into the cabin. The door also incorporates the aft flight attendant's seat.

Baggage door

An external baggage door is provided at the left side of the baggage compartment in the rear fuselage. The door lies flush with the fuselage skin when closed and opens by retracting inward and upward into the ceiling. The retracted door provides an opening of 1.27 m x 1.52 m in the fuselage side.

Two proximity sensors, positioned around the doorframe, signal the PSEU of a door unsafe condition, which illuminates the BAG DOOR warning light in the flight compartment.

Service door

A service door, located at the aft right hand side of the fuselage, permits easy access to the rear-mounted buffet. The door is a plug type and opens inward and upwards along tracks on the ceiling. The door is held in the raised position by detents in the track and positive latching mechanism. Raise the door to the fully open position to properly latch the door. Before closing, support the door before releasing the latching mechanism. Door opening and closing can be performed from the inside or the outside of the aircraft (see service door operation figure).

A sensor, positioned on the door frame, signals the PSEU of a door unsafe condition which illuminates a SERVICE DOOR warning light in the flight compartment.

Emergency exit doors and escape hatch

Three emergency exit doors are fitted in the cabin. All emergency doors can be opened from either inside or outside.

The forward exit door is located at the right side of the cabin, between seat rows 1 and 2. This door is a type I, outward opening type. A sensor signals the PSEU of a door unsafe condition, which illuminates a FWD EXIT DOOR warning light in the flight compartment.

Two type III, inward opening, emergency escape doors are located under the wing. No warning systems are fitted to indicate the status of these doors.

The escape hatch is located in the flight compartment ceiling. It can only be opened from the inside of the aircraft.

For more details on emergency exit doors and escape hatch refer to section 12-7 emergency equipment.

Service and refuelling doors

Several hinged doors are fitted for servicing, inspection and refuelling purposes. All open outward and are locked closed by quick release fasteners.

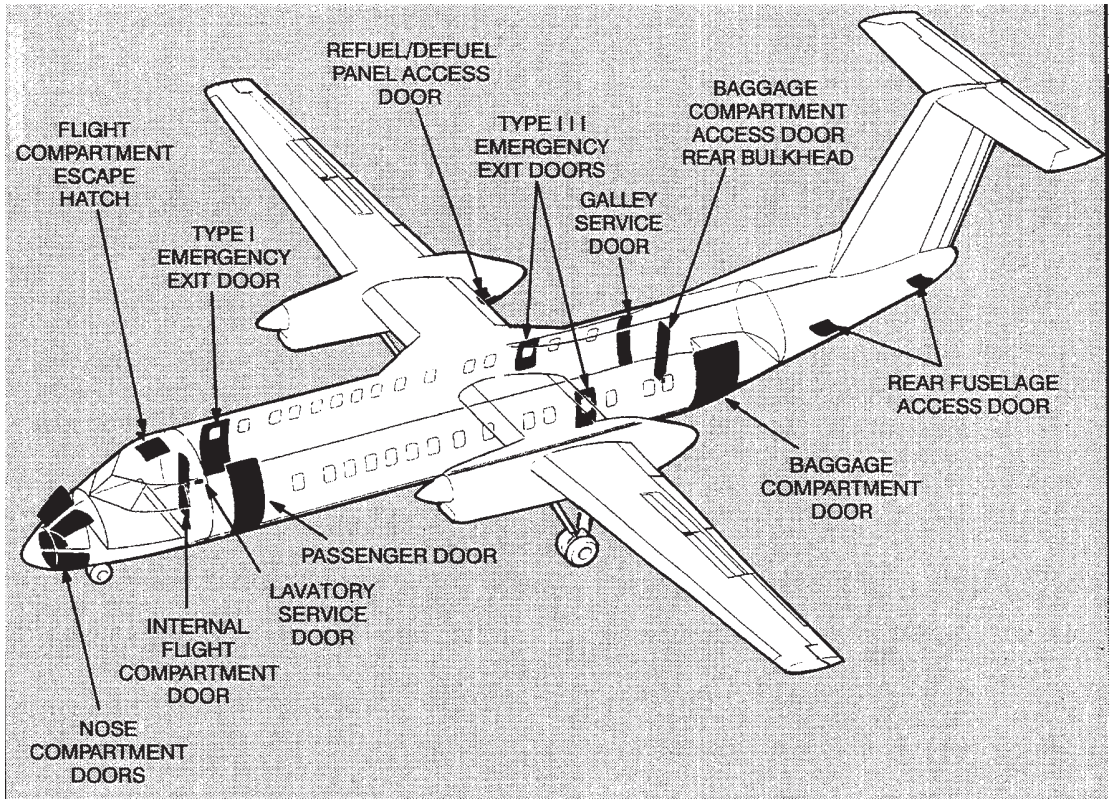

Doors -- overview

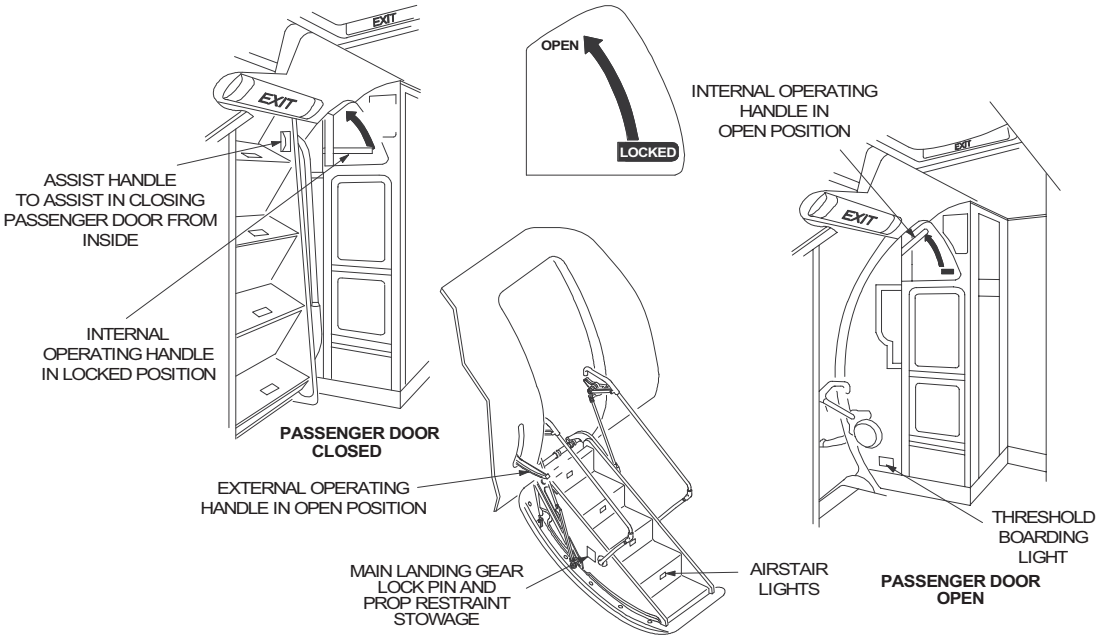

Passenger door

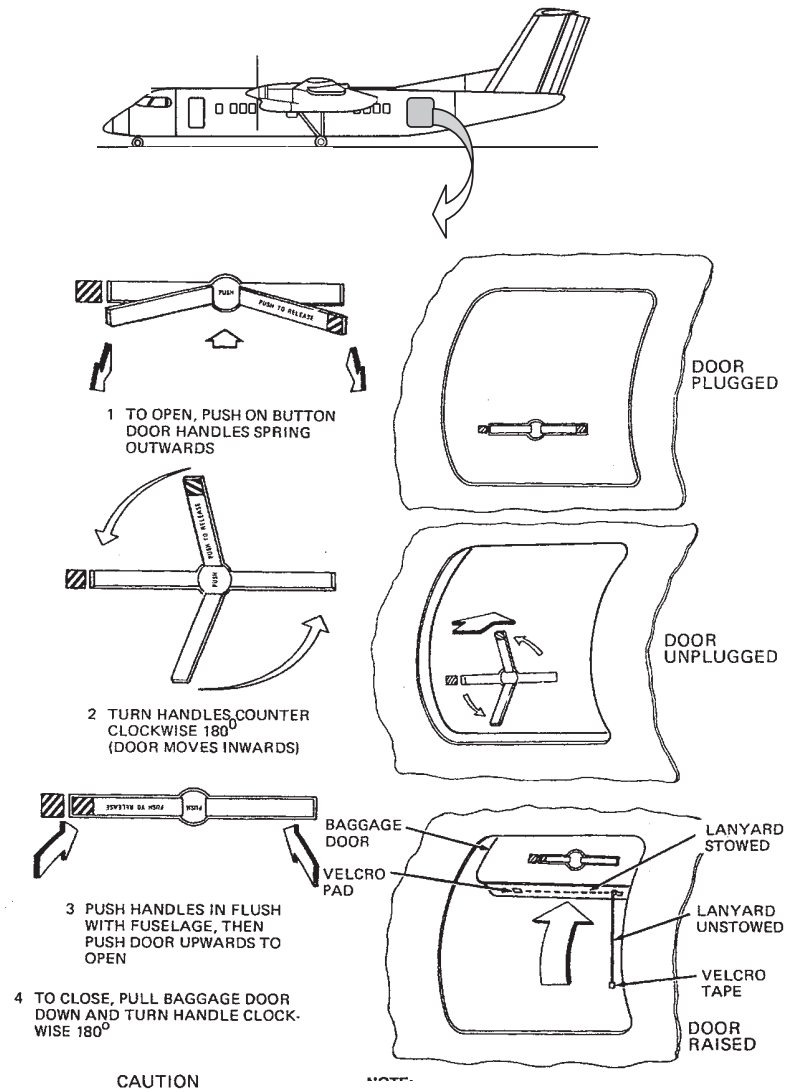

CAUTION

THE DOOR HANDLE WINGS MUST BE FLUSH IN THEIR RECESSES BEFORE THE DOOR IS RAISED TO PREVENT DAMAGE EITHER TO THE DOOR OR SURROUNDING STRUCTURE.

A support strut replaces the lanyard strap. Secure the strut to the right side doorframe bracket to support the door in the open position. Re-stow support strut into spring clip before re-plugging door.

Baggage door

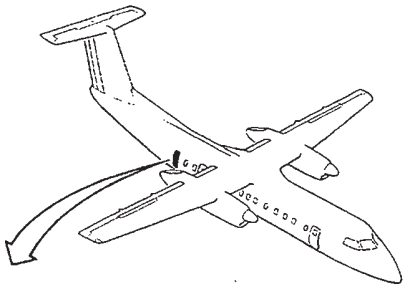

1. PRESS BUTTON

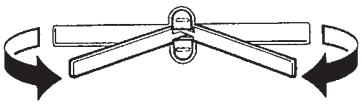

HANDLES SPRING OUT WHEN BUTTON IS PRESSED.

DOOR PLUGGED

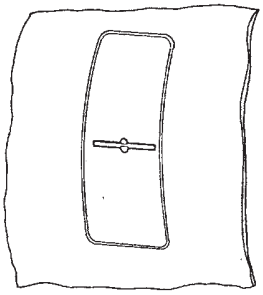

2. ROTATE HANDLES 180°

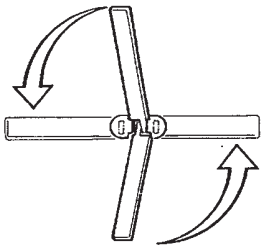

DOOR UNPLUGS (MOVES IN) AS HANDLES ARE TURNED 180°

DOOR UNPLUGGED

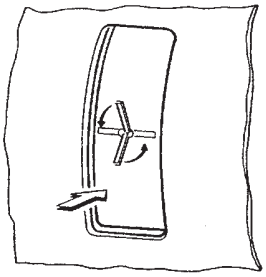

GALLEY SERVICE DOOR

3. PRESS HANDLES INTO DOOR

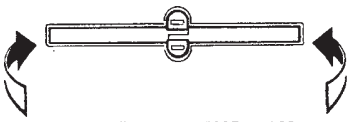

HANDLES ARE PRESSED INTO LATCH FLUSH WITH DOOR BEFORE RAISING DOOR TO OPEN POSITION.

NOTE;
REVERSE ABOVE PROCEDURE TO CLOSE DOOR.

DOOR RAISED

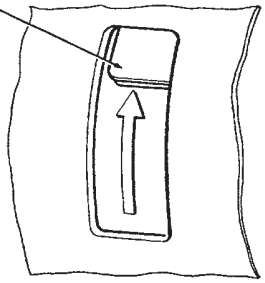

Service door – operation from outside

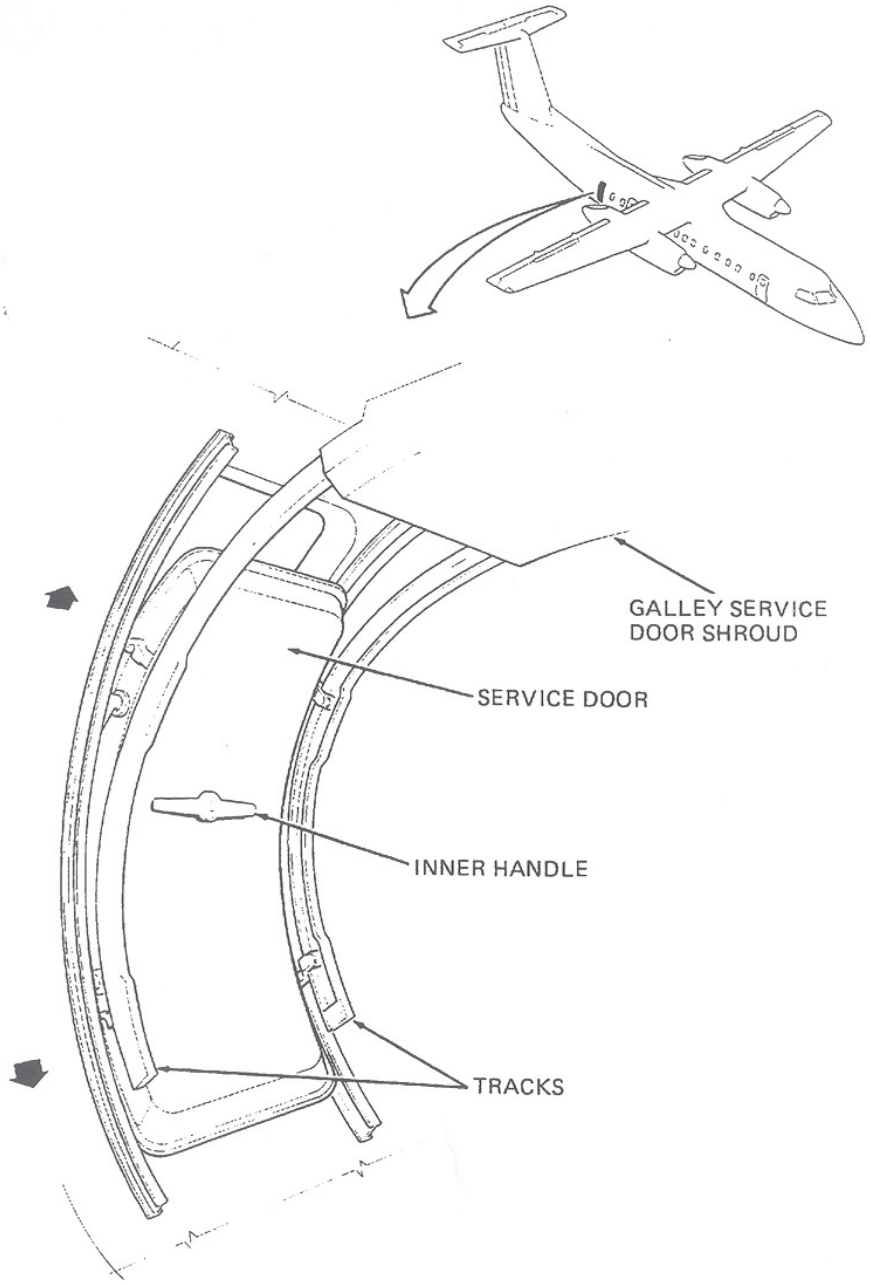

Service door – operation from inside

Exterior lighting

The exterior lighting system provides illumination of the aircraft's extremities and vertical stabilizer for collision avoidance and visual inspection of the wing and engine nacelle areas. The exterior lights are controlled from two exterior lights panels located on the overhead console.
Glareshield mounted lights illuminate the ice detector posts mounted on each windshield wiper arm. The lights are powered from its respective essential DC buses and controlled from momentary contact pushbuttons labelled W/S WIPER ICE DETECT LIGHT. The pushbuttons are situated on pilot and co-pilot side consoles.

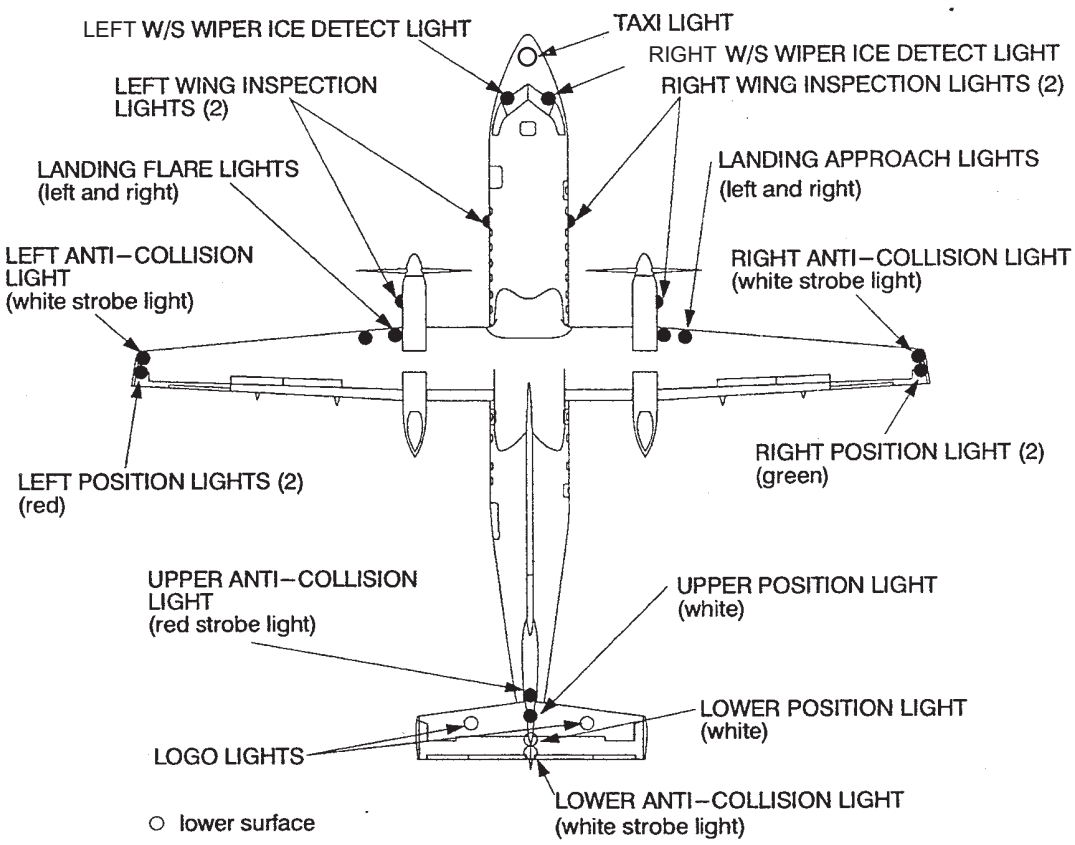

Exterior lights

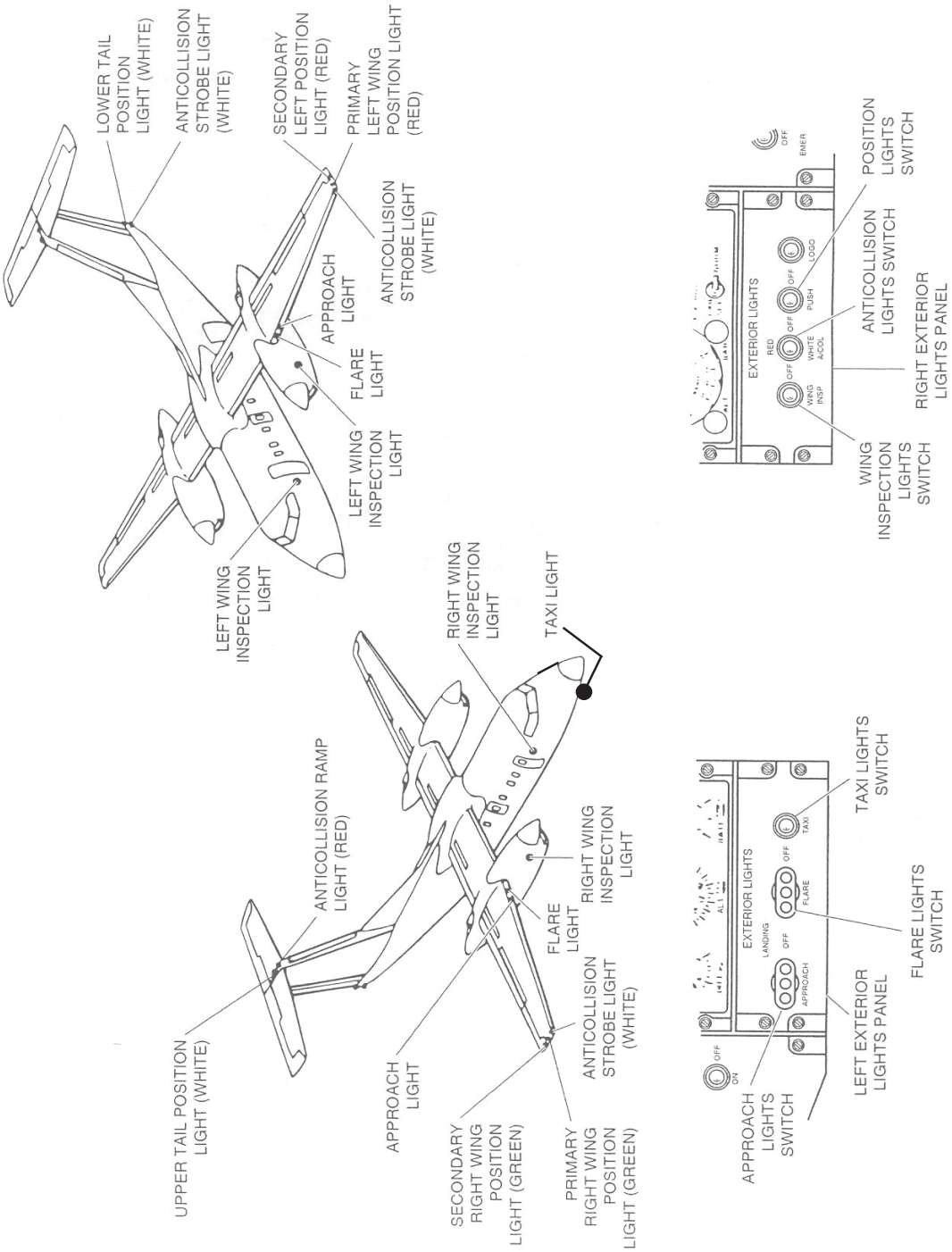
LOWER TAIL POSITION LIGHT (WHITE)
ANTICOLLISION STROBE LIGHT (WHITE)
SECONDARY LEFT POSITION LIGHT (RED)
PRIMARY LEFT WING POSITION LIGHT (RED)
ANTICOLLISION STROBE LIGHT (WHITE)
APPROACH LIGHT
FLARE LIGHT
LEFT WING INSPECTION LIGHT
LEFT WING INSPECTION LIGHT
RIGHT WING INSPECTION LIGHT
TAXI LIGHT
ANTICOLLISION RAMP LIGHT (RED)
RIGHT WING INSPECTION LIGHT
FLARE LIGHT
ANTICOLLISION STROBE LIGHT (WHITE)
UPPER TAIL POSITION LIGHT (WHITE)
APPROACH LIGHT
SECONDARY RIGHT WING POSITION LIGHT (GREEN)
PRIMARY RIGHT WING POSITION LIGHT (GREEN)
EXTERIOR LIGHTS
POSITION LIGHTS SWITCH
ANTICOLLISION LIGHTS SWITCH
RIGHT EXTERIOR LIGHTS PANEL
WING INSPECTION LIGHTS SWITCH
EXTERIOR LIGHTS
TAXI LIGHTS SWITCH
FLARE LIGHTS SWITCH
LEFT EXTERIOR LIGHTS PANEL
APPROACH LIGHTS SWITCH

FLIGHT COMPARTMENT

Cockpit layout and panels

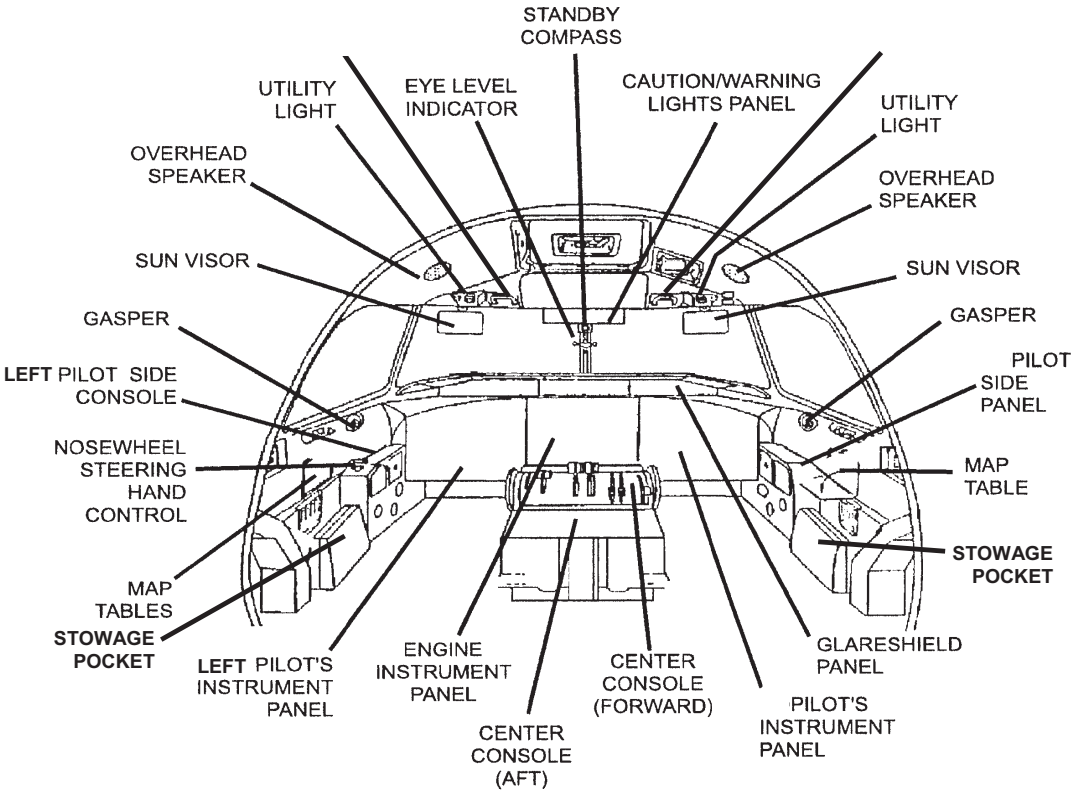

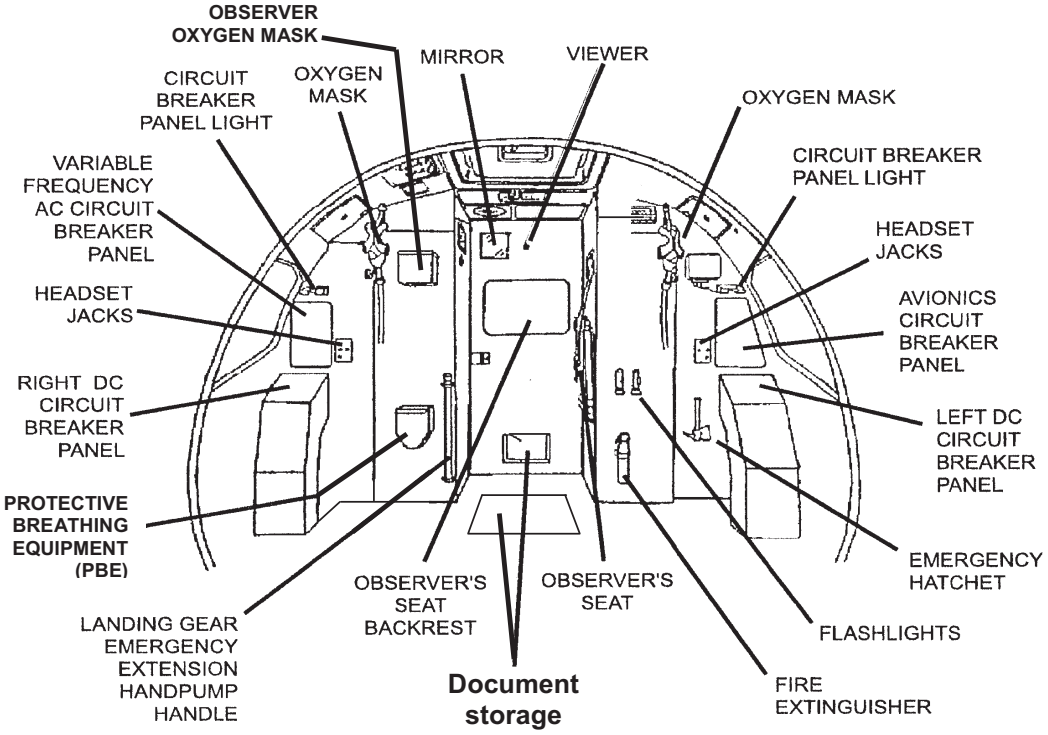

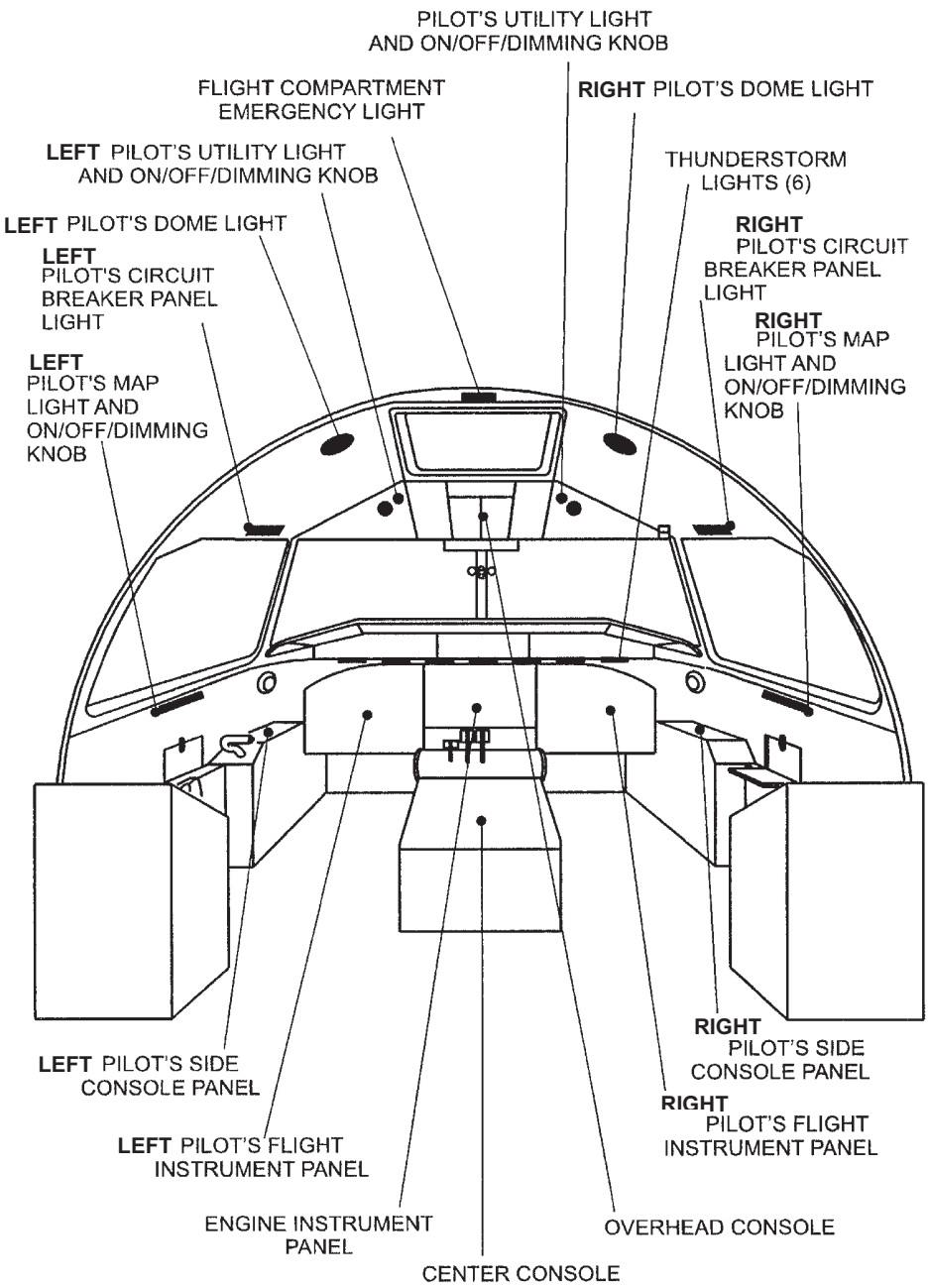

Cockpit panels

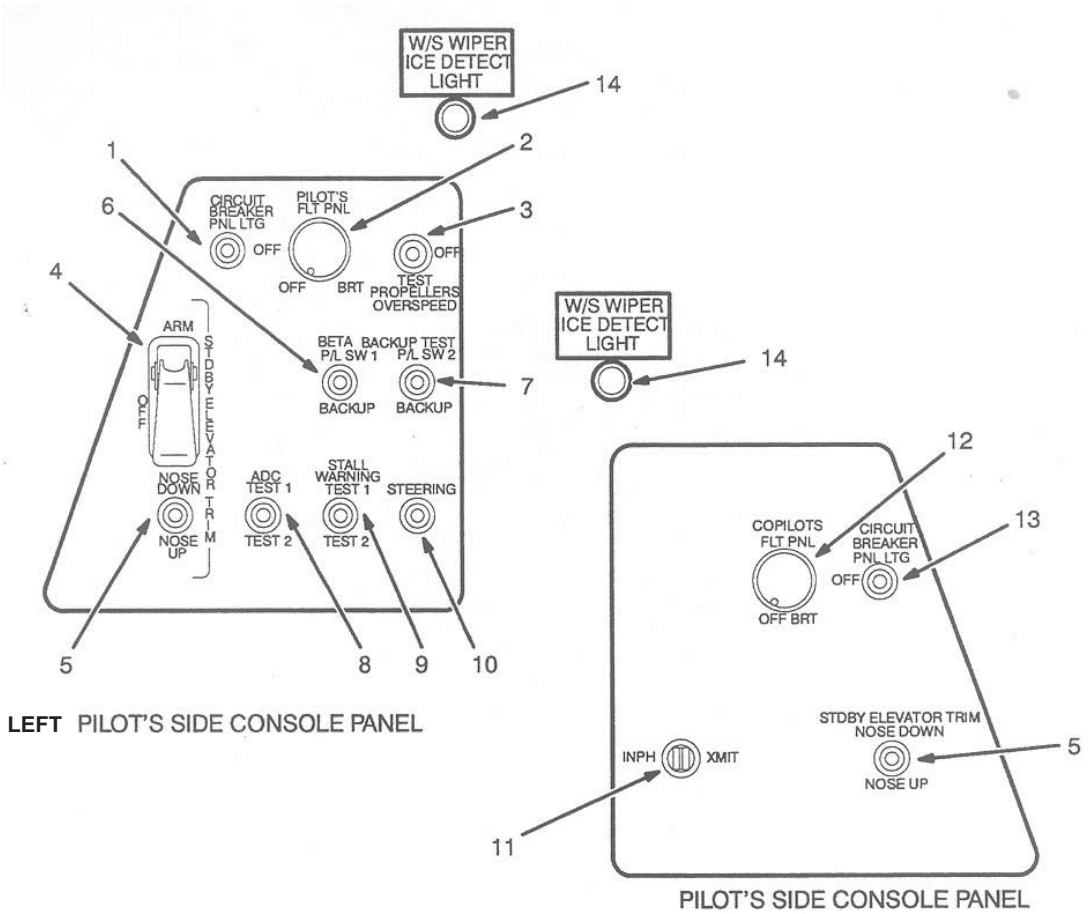

LEFT PILOT'S SIDE CONSOLE PANEL

1. LEFT CIRCUIT BREAKER PANEL LIGHT SWITCH
2. PILOT'S INSTRUMENT PANEL LIGHTING CONTROL KNOB
3. ENGINES AND PROPELLERS'S OVERSPEED TEST SWITCH
4. STANDBY ELEVATOR TRIM SELECTOR
5. STANDBY ELEVATOR TRIM CONTROLLER
6. NO. 1 PROPELLER BETA BACKUP TEST SWITCH
7. NO. 2 PROPELLER BETA BACKUP TEST SWITCH
8. AIR DATA COMPUTER TEST SWITCH
9. STALL WARNING TEST SWTICH
10. NOSEWHEEL STEERING SWITCH
11. MICROPHONE INTERPHONE/TRANSMIT SWITCH
12. COPILOT'S INSTRUMENT PANEL LIGHT SWITCH
13. RIGHT CIRCUIT BREAKER PANEL LIGHT SWITCH
14. WINDSHIELD WIPER ICE DETECTOR LIGHT SWITCH

Left and right pilot's side panels

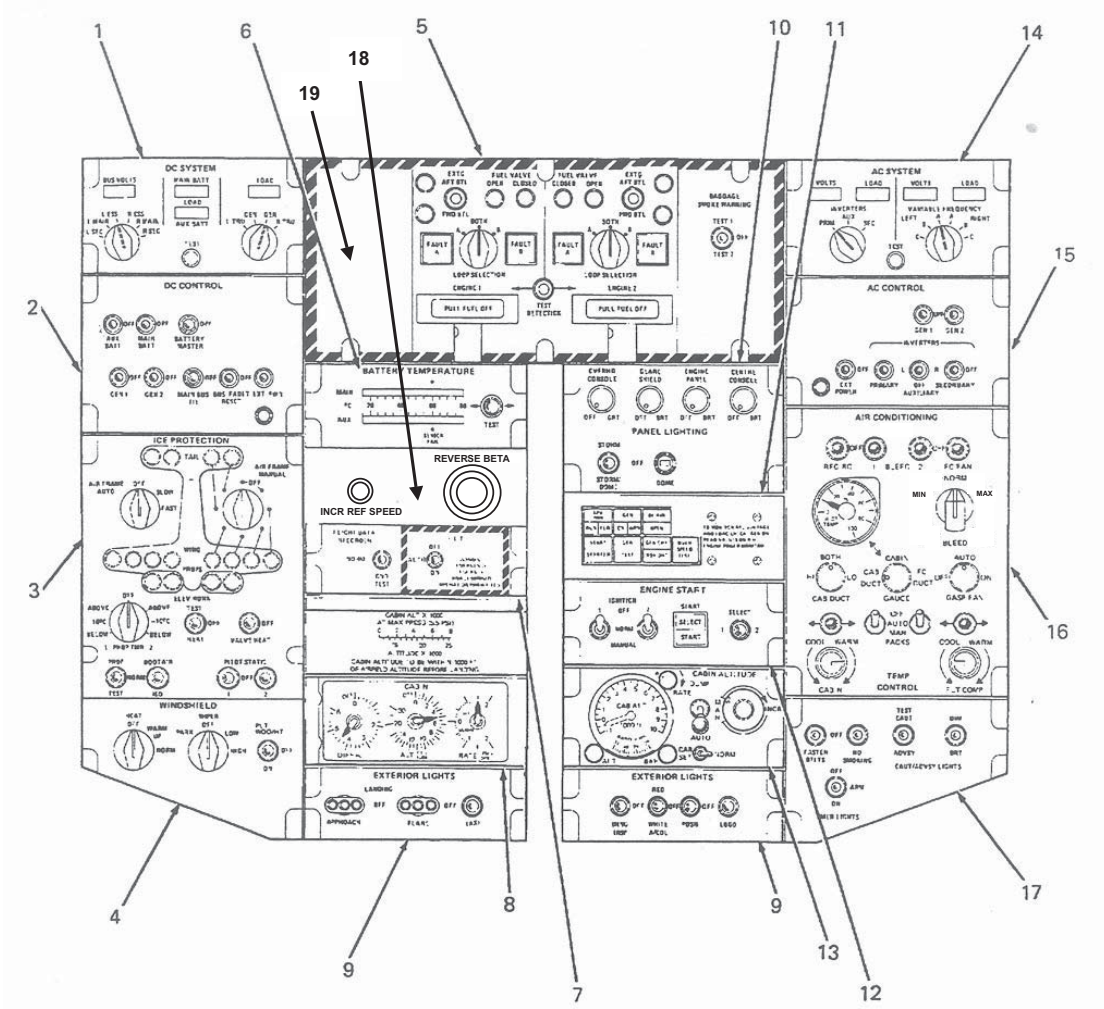

1. DC SYSTEM MONITOR PANEL
2. DC CONTROL PANEL
3. ICE PROTECTION CONTROL PANEL
4. WINDSHIELD CONTROL PANEL
5. FIRE DETECTION PANEL
6. BATTERY TEMPERATURE MONITOR PANEL
7. FLIGHT DATA RECORDER AND EMERGENCY LOCATOR TRANSMITTER CONTROL PANEL
8. PRESSURIZATION INDICATOR PANEL
9. EXTERIOR LIGHTING CONTROL PANELS
10. INTERIOR LIGHTING CONTROL PANEL
11. APU CONTROL PANEL
12. ENGINE STARTING CONTROL PANEL
13. PRESSURIZATION CONTROL PANEL
14. AC SYSTEM MONITOR PANEL
15. AC SYSTEM CONTROL PANEL
16. AIR CONDITIONING AND BLEED AIR CONTROL PANEL
17. CAUTION LIGHTS, CABIN SIGNS AND EMERGENCY LIGHTS CONTROL PANEL
18. **INCR REF SPEED SWITCH AND REVERSE BETA WARNING HORN**
19. **APU FIRE PROTECTION PANEL (SEE CH.12-8)**

Overhead panel

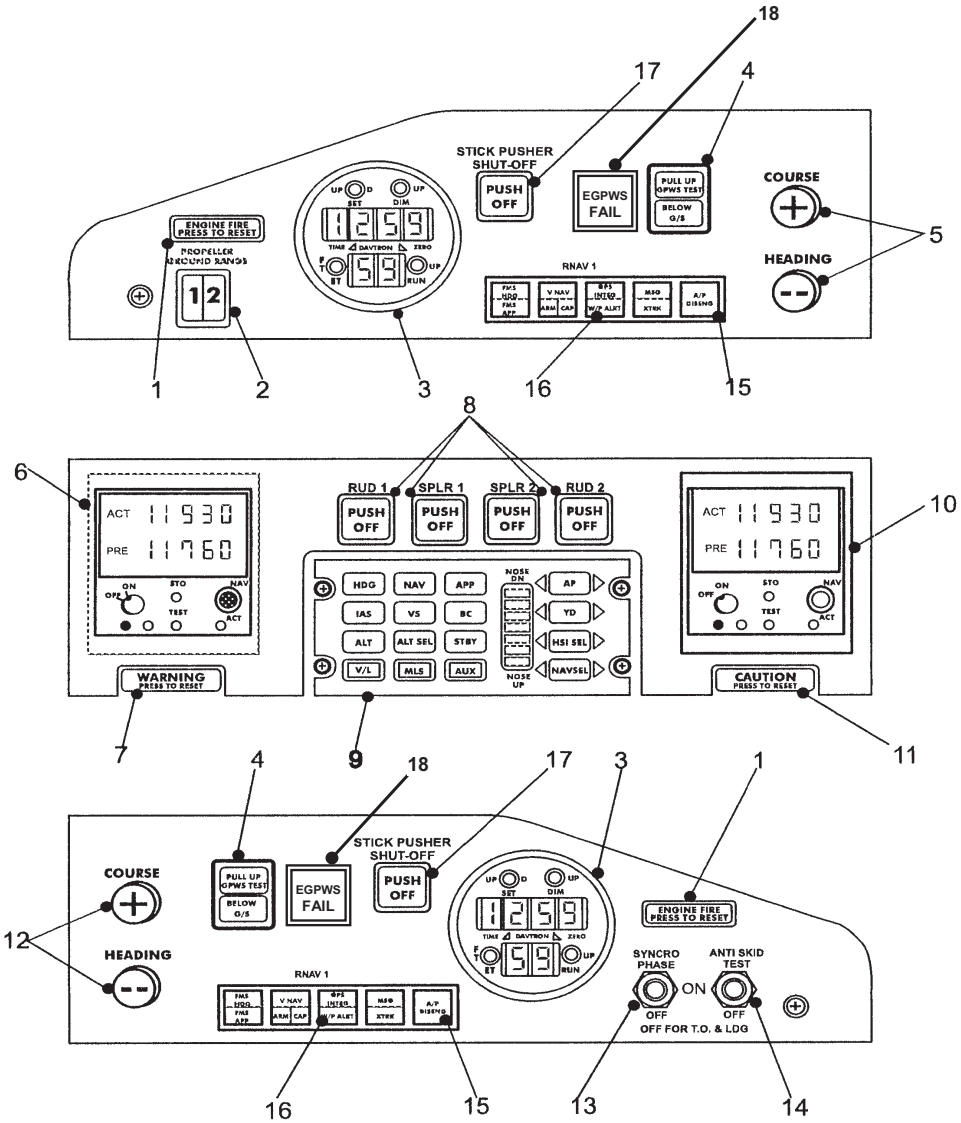

LEGEND

1. Engine Fire Warning Lights.
2. Propeller Ground Range Indicators.
3. Clock.
4. Ground Proximity Warning System Indicators.
5. Pilot's HSI Remote Control Knobs.
6. No.1 VHF NAV Controller.
7. Master Warning Light.
8. Rudder And Spoiler Hydraulic Power Shutoff Valve Switchlights.
9. Flight Guidance Controller.
10. No.2 VHF NAV Controller.
11. Master Caution Light.
12. Copilot's HSI Remote Control Knobs.
13. Propeller Synchrophaser Switch.
14. Anti-skid Switch.
15. Autopilot Disengage Annunciators.
16. RNAV Annunciators
17. STICK PUSHER SHUT-OFF Switchlight
18. **EGPWS inhibit terrain/ fault light**

Glareshield panels

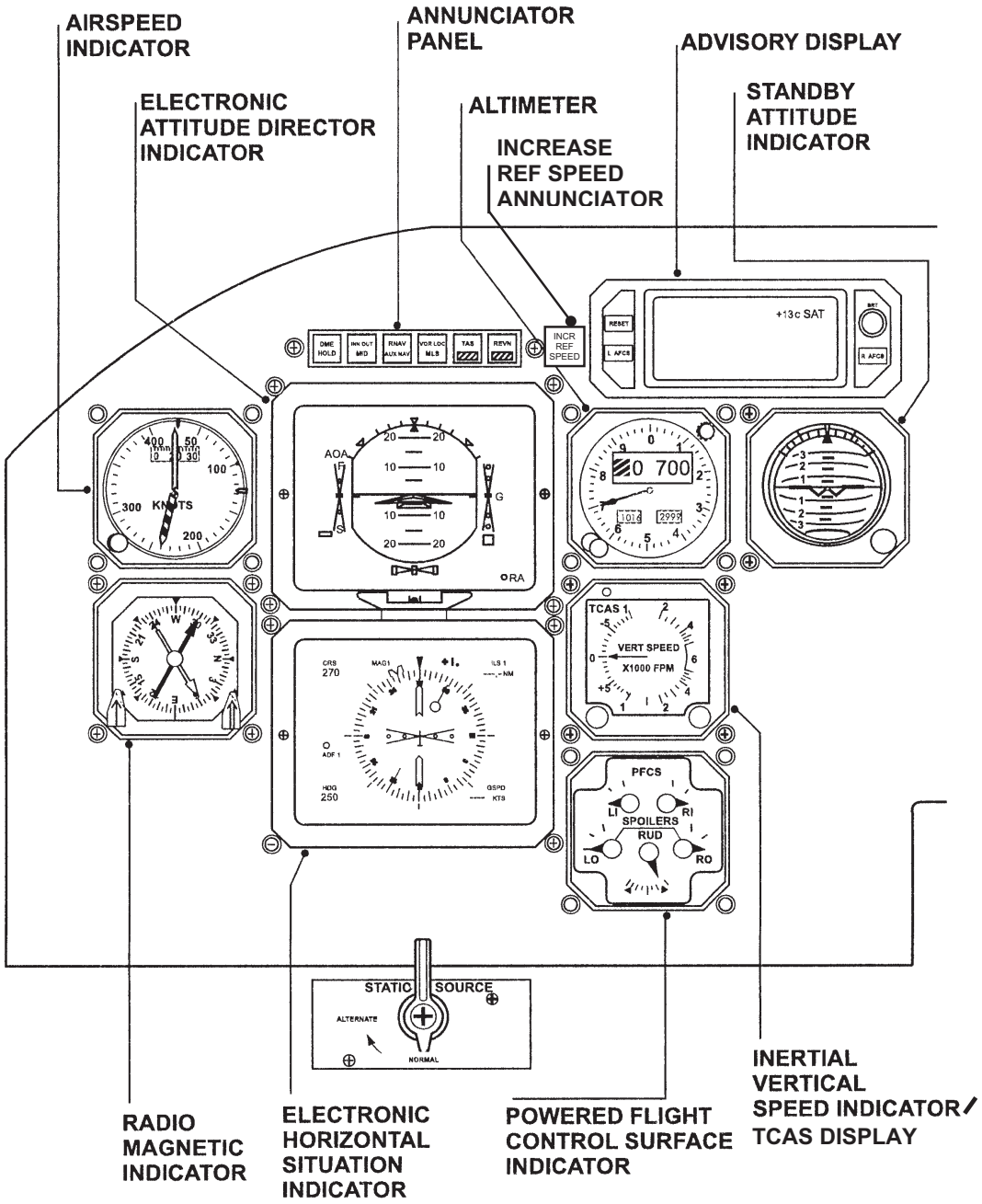

Left pilot's flight instrument panel

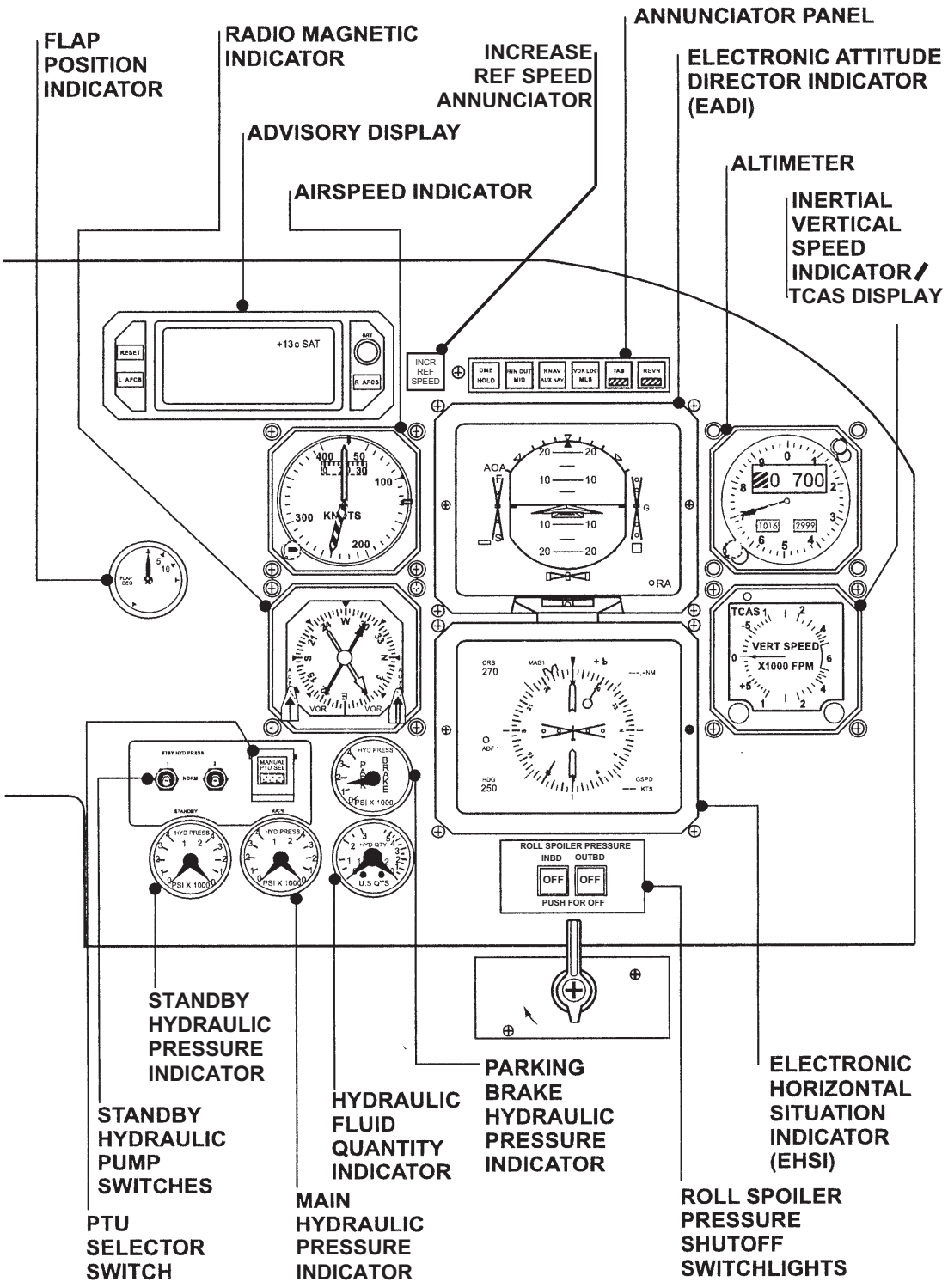

Right pilot's flight instrument panel

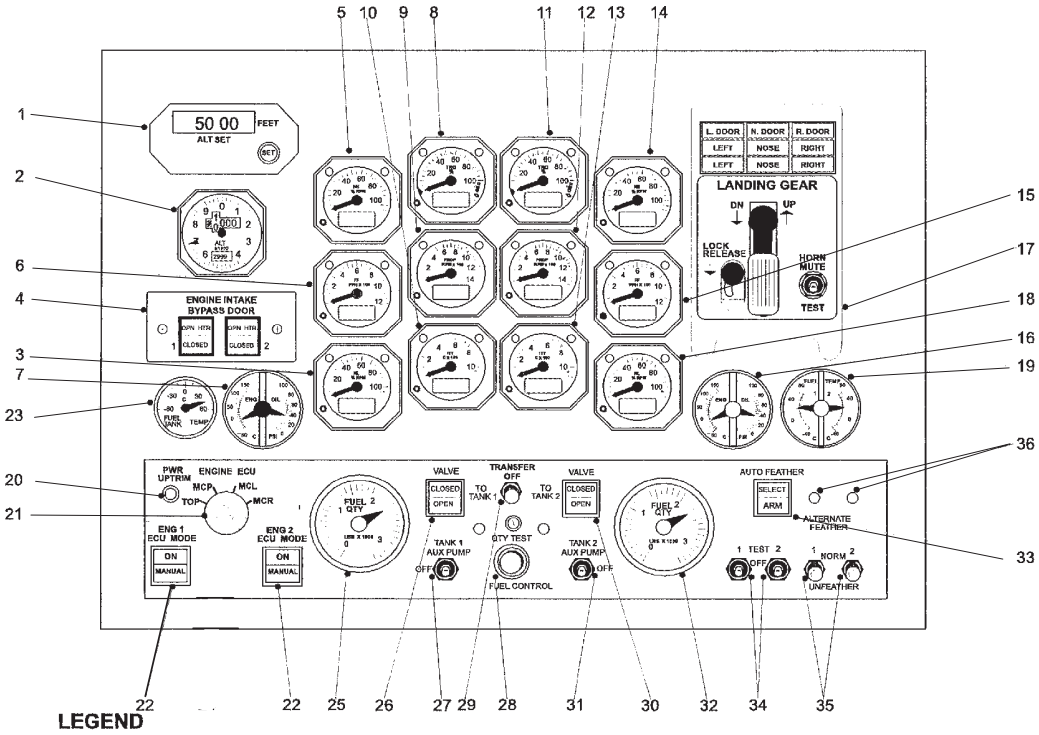

LEGEND

1. Altitude Alert Controller.
2. Standby Altimeter.
3. Engine 1 Low Pressure Compressor Speed Indicator.
4. Engine Intake Bypass Door Control Panel.
5. Engine 1 High Pressure Compressor Speed Indicator.
6. Engine 1 Fuel Flow Indicator.
7. Engine 1 Oil Temperature and Pressure Indicator.
8. Engine 1 Torque Indicator.
9. Engine 1 Propeller Speed Indicator.
10. Engine 1 Interturbine temperature Indicator.
11. Engine 2 Torque Indicator.
12. Engine 2 Propeller Speed Indicator.
13. Engine 2 Interturbine Temperature.
14. Engine 2 High Speed Compressor Speed Indicator.
15. Engine 2 Fuel Flow Indicator.
16. Engine 2 Oil Temperature and Pressure Indicator.
17. Landing Gear Control Panel.
18. Engine 2 Low Pressure Compressor Speed Indicator.
19. Fuel Temperature Indicator.
20. Power Uptrim Indicator.
21. Electronic Control Unit Rating Selector.
22. Engine Electronic Control Unit Mode Selector.
23. Fuel Tank Temperature.

25. Left Tank Fuel Quantity Indicator.
26. Left Transfer Valve Indicator Light.
27. Left Fuel Tank Auxiliary Fuel Pump Switch and Indicator.
28. Fuel Quantity Indicator Test Switch.
29. Fuel Transfer Selector.
30. Right Transfer Valve Indicator Light.
31. Right Fuel Tank Auxiliary Fuel Pump. Switch and Indicator.
32. Right Tank Fuel Quantity Indicator.
33. Autofeather Selector.
34. Autofeather Test Switches.
35. Alternate Feather Switches.
36. Auxiliary Feather Pump Indicators.

Engine instrument panel

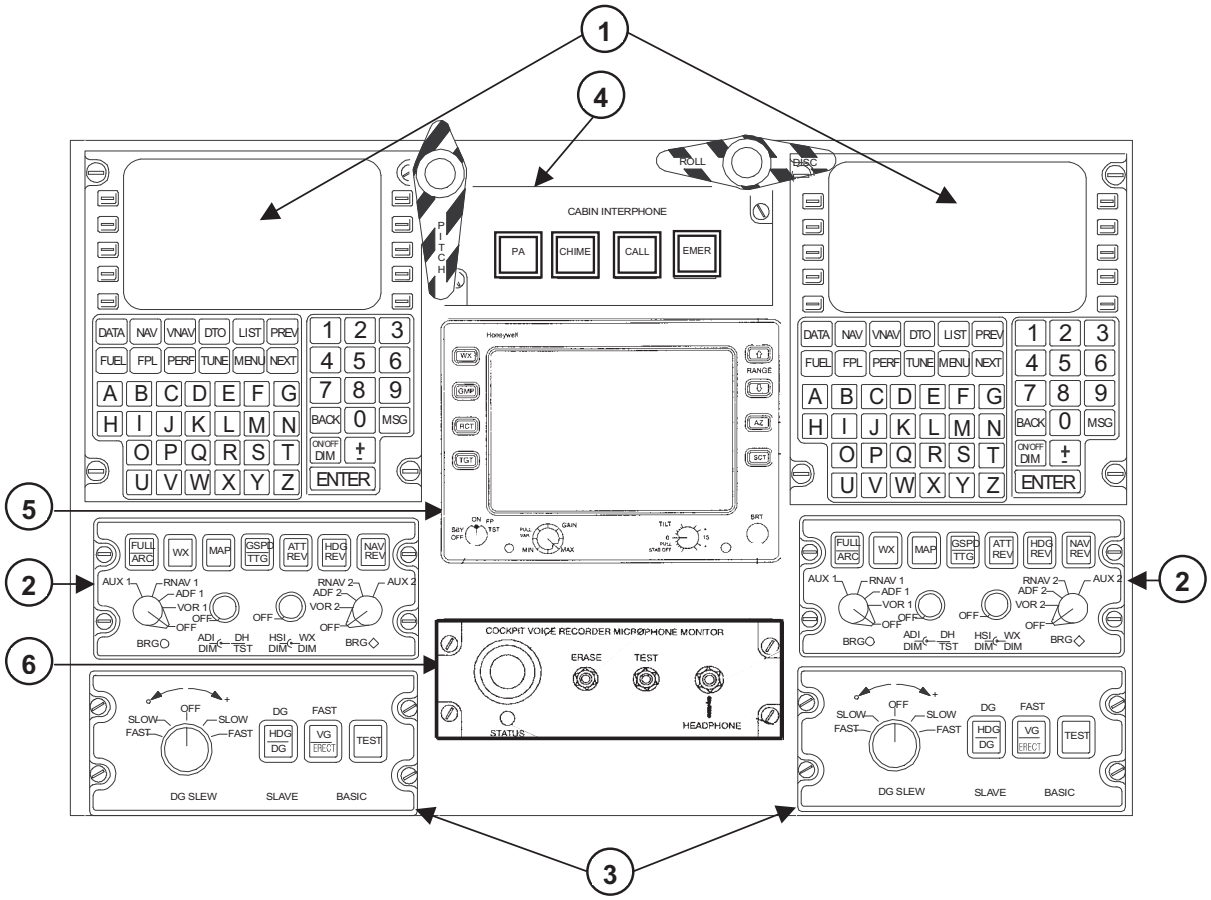

1. Flight Management System Control Display Units (FMS CDUs)
2. Electronic Flight Instrument System (EFIS) Controllers
3. Attitude / Heading Reference System Controllers
4. Public Address / Cabin Interphone System (PACIS) Controller
5. Weather Radar Indicator
6. Cockpit Voice Recorder (CVR)

Forward center console

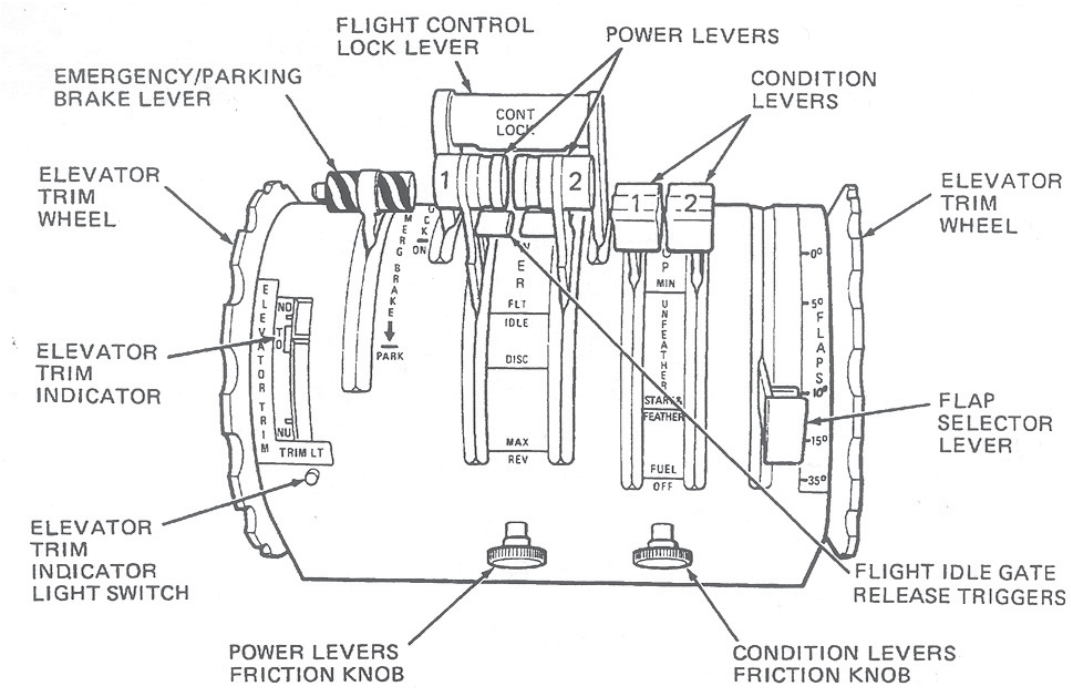

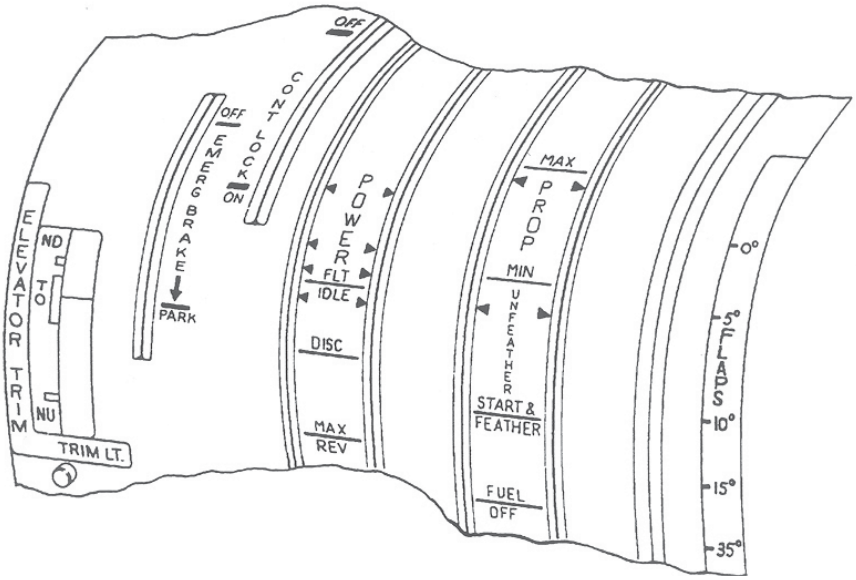

Middle center console

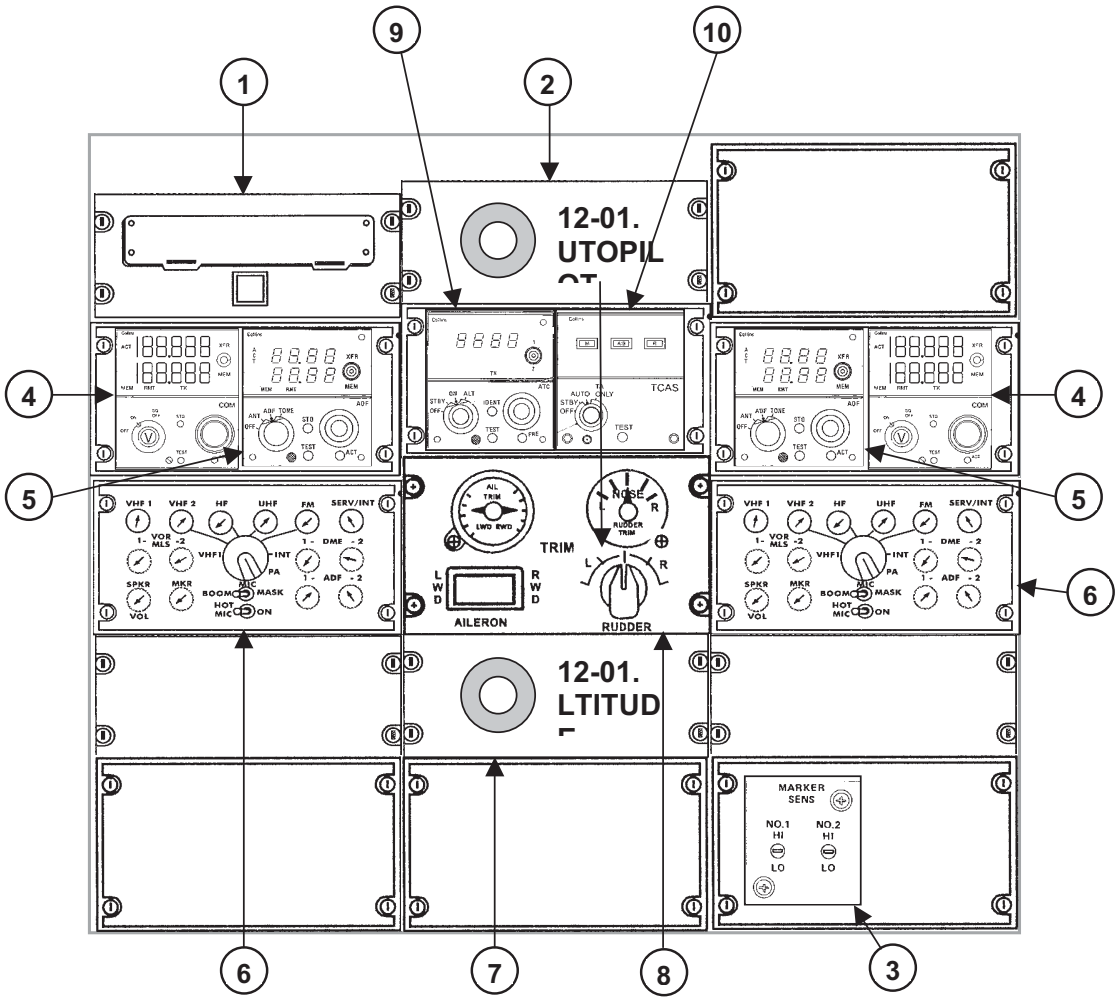

1. FMS Data Loader
2. AutoPilot Disengage Aural Warning Panel
3. Marker Sensitivity Panel
4. VHF Communication Controllers (8.33 KHz spacing)
5. ADF Controllers
6. ACP – Audio Control Panels
7. Altitude Alert Aural Warning
8. Trim Control Panel
9. ATC – Transponder Controller
10. TCAS Controller

Aft center console

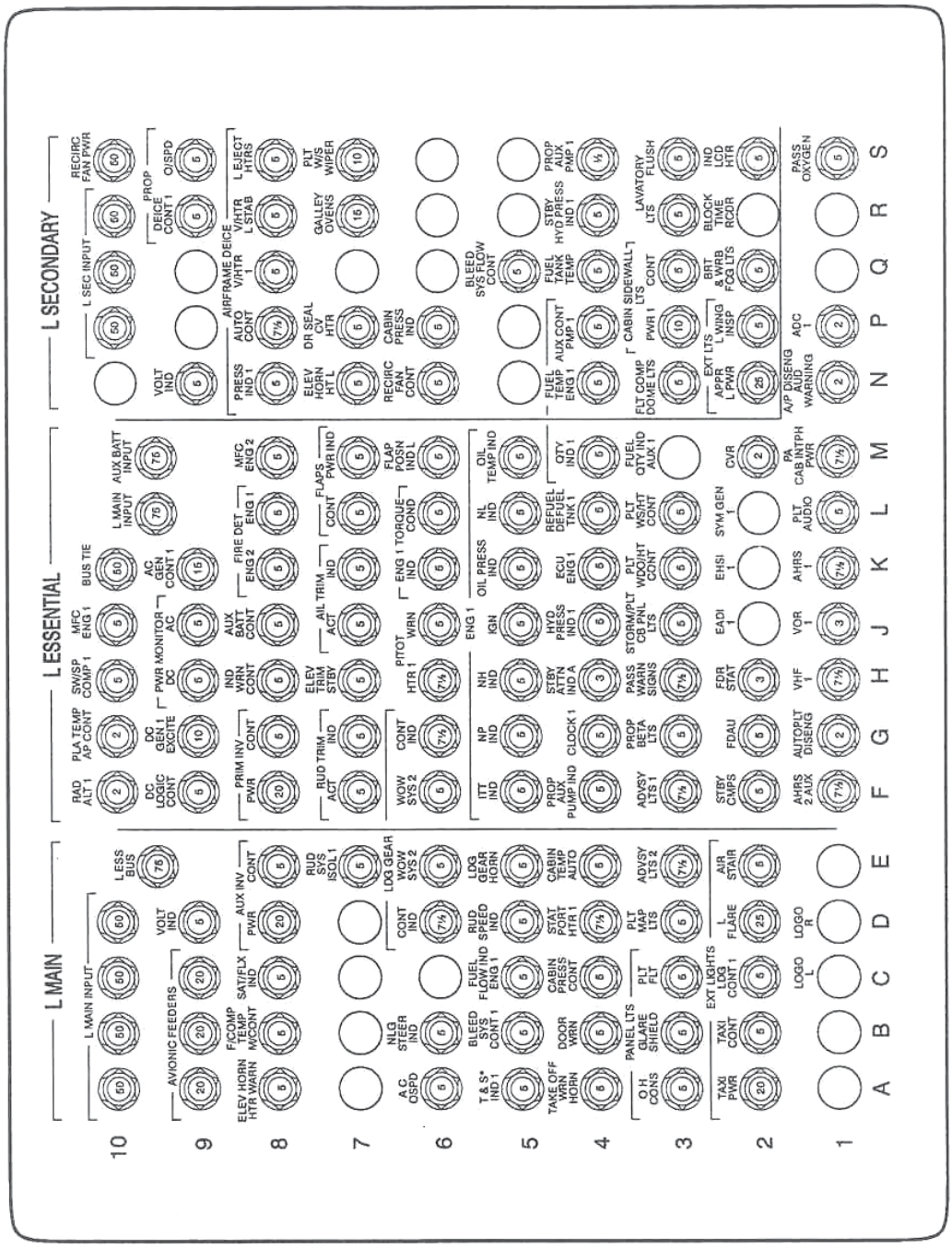

Left circuit breaker panel

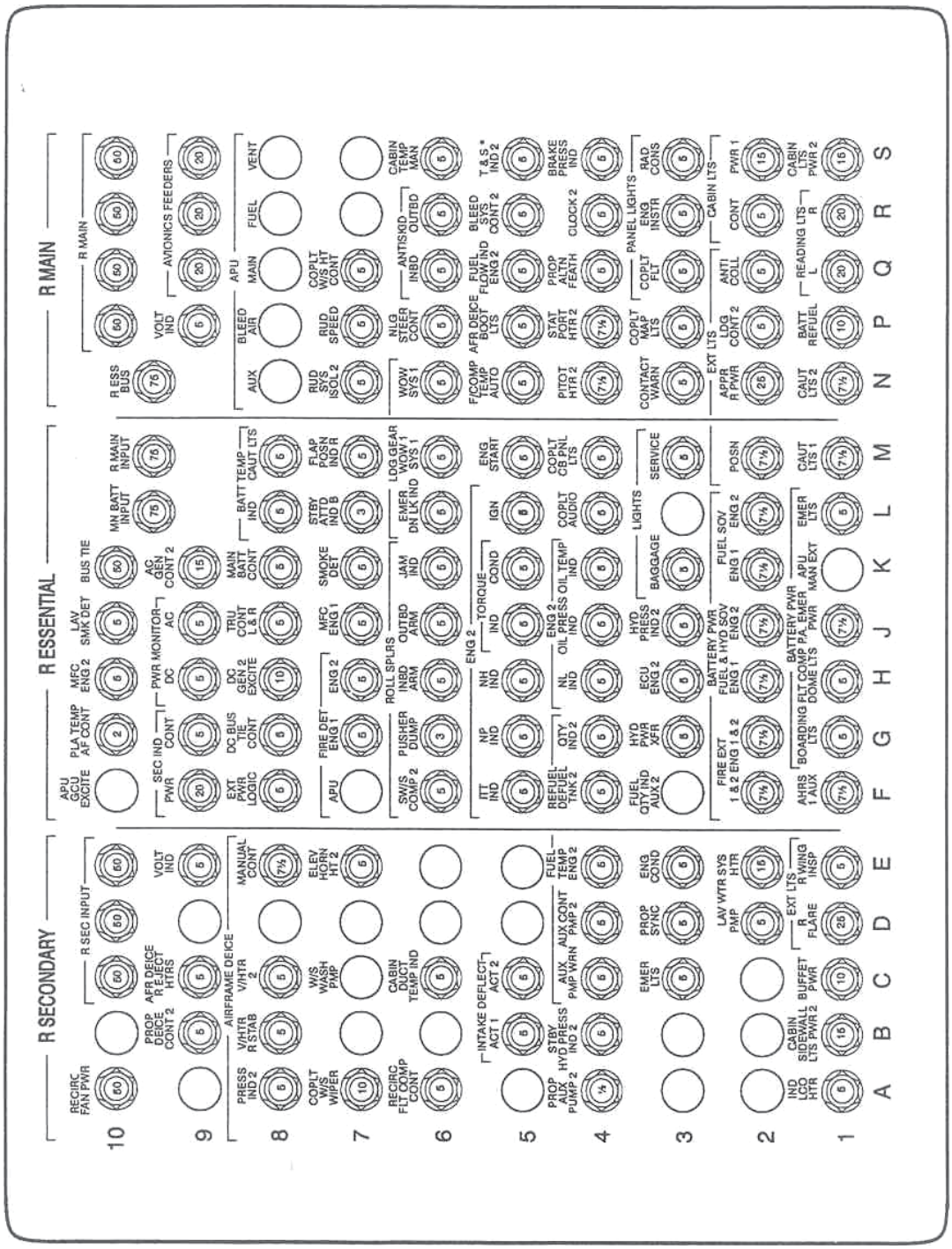

Right circuit breaker panel

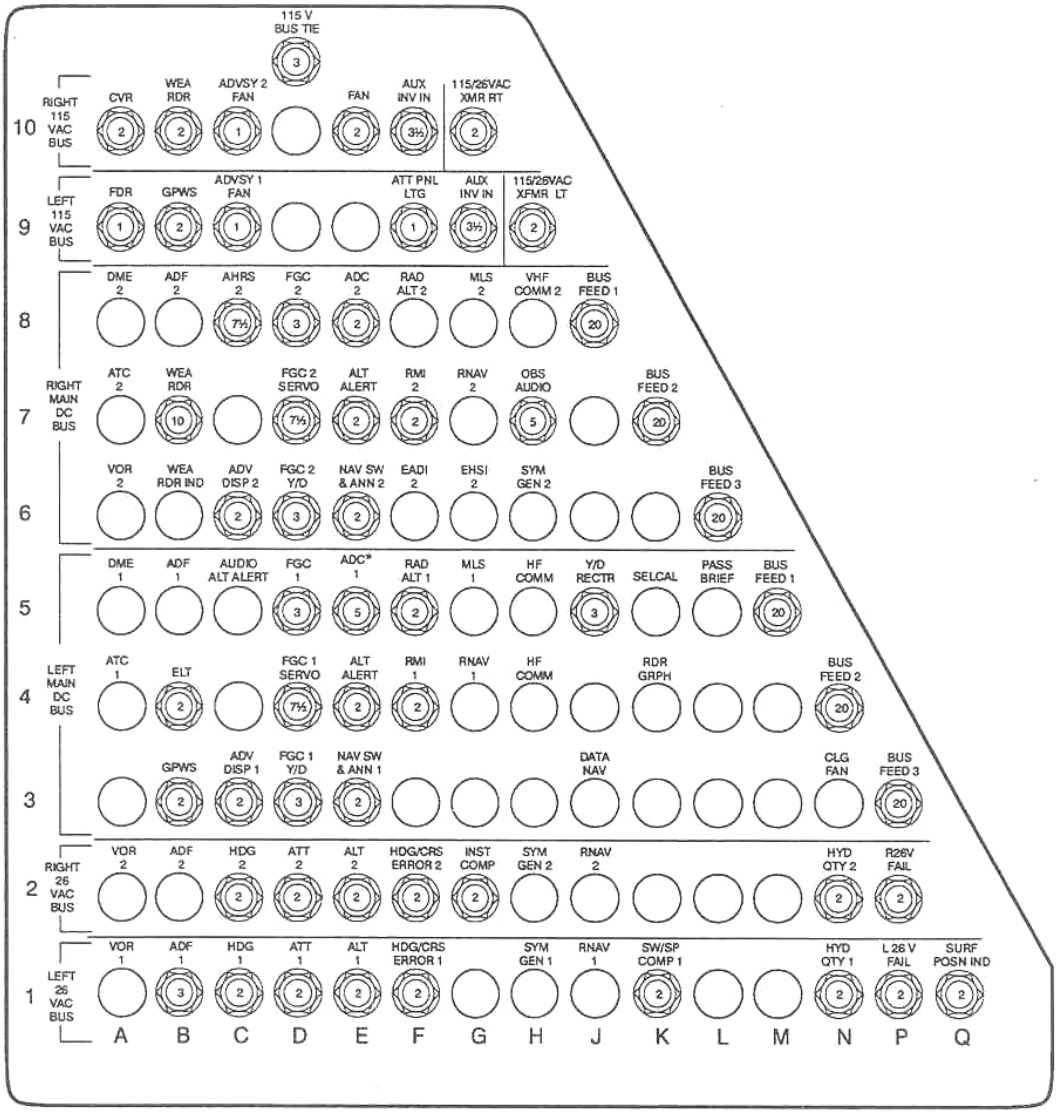

Avionics circuit breaker panel

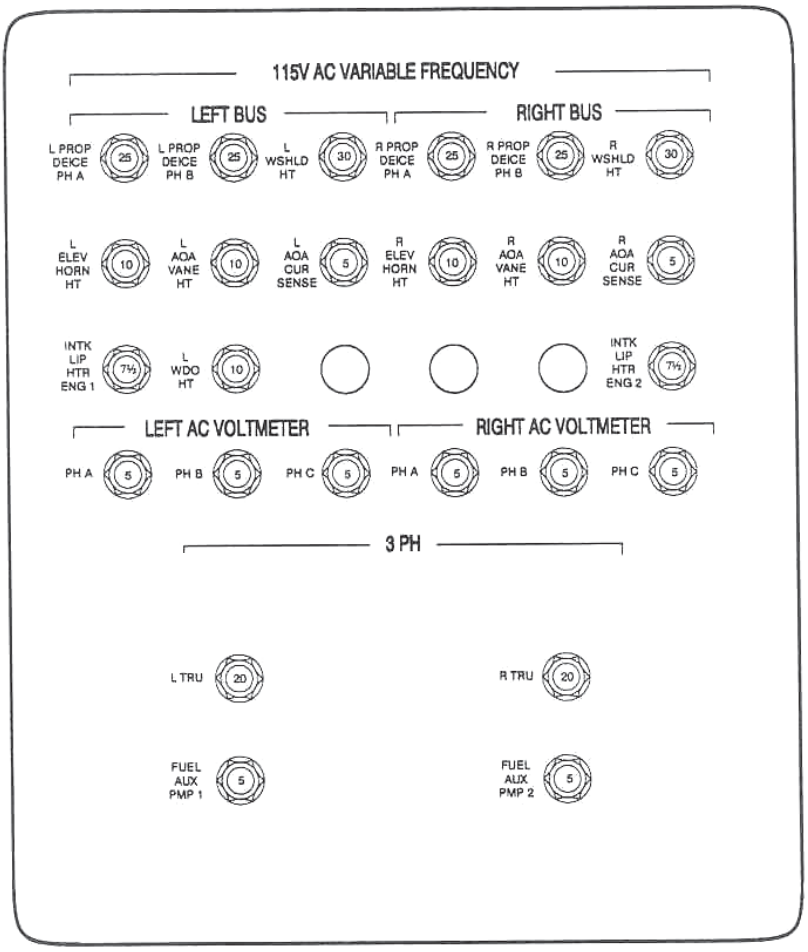

115 VAC circuit breaker panel

Seats

The pilot and co-pilot's seats are fully adjustable bucket type with fold up armrests. The seats allow horizontal and vertical adjustment as well as individual control of lumbar support.

Each seat is adjustable fore and aft on floor tracks by means of a lock release grip, located under the inboard leg support of each seat. The grip actuates locking pins in the horizontal seat frame that engage holes in the seat track.

Vertical adjustment is provided for by an articulating frame supporting the seat on its base in conjunction with counter balance springs. A lock mechanism, operated by a release lever on the outboard side of the seat pan, secures the seat at any point in its vertical adjustment range. Adjustment is accomplished by releasing the vertical lock while sitting in the seat and varying the weight applied against the counterbalance springs to move the seat to the desired position before re-engaging the lock.

Each seat is equipped with a crotch strap with quick-release buckle, lap belts, shoulder harness and inertia reel. The inertia reel incorporates a lock mechanism, controlled by a lever located on the inboard side of each seat. Selection of the lever to inertia mode permits free reel in or out of the shoulder harness until a deceleration force of 3.0 G or greater is experienced, at which time it locks automatically. Selection of the lever to manual mode locks the inertia reel and maintains the harness at the set length.

The observer's seat is located forward of the flight compartment door and is retained in the down position by a spring-loaded latch on the right side of the seat. The flight compartment door can be opened with the seat occupied.

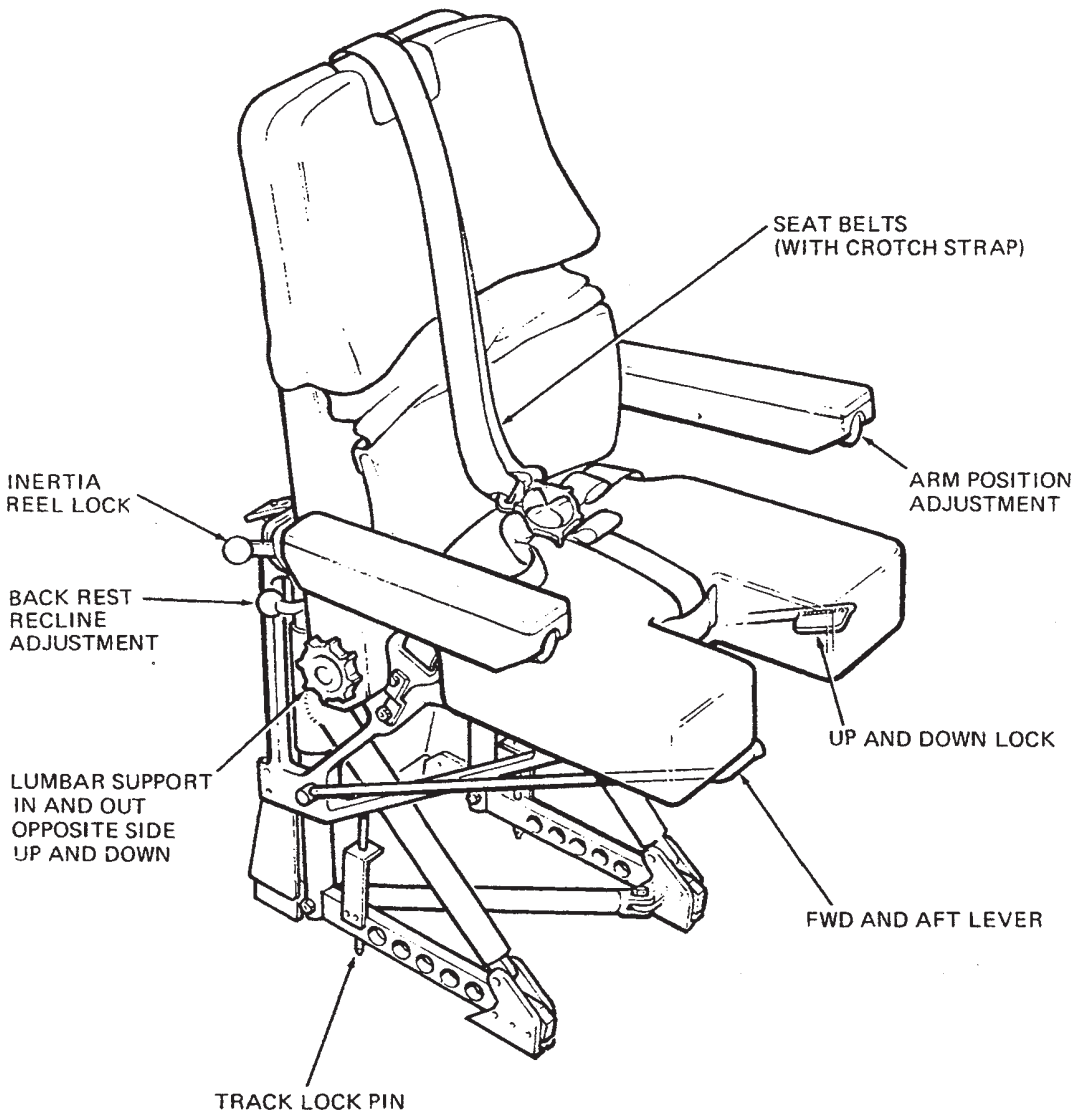

Pilot's seat (Left seat shown – right side opposite)

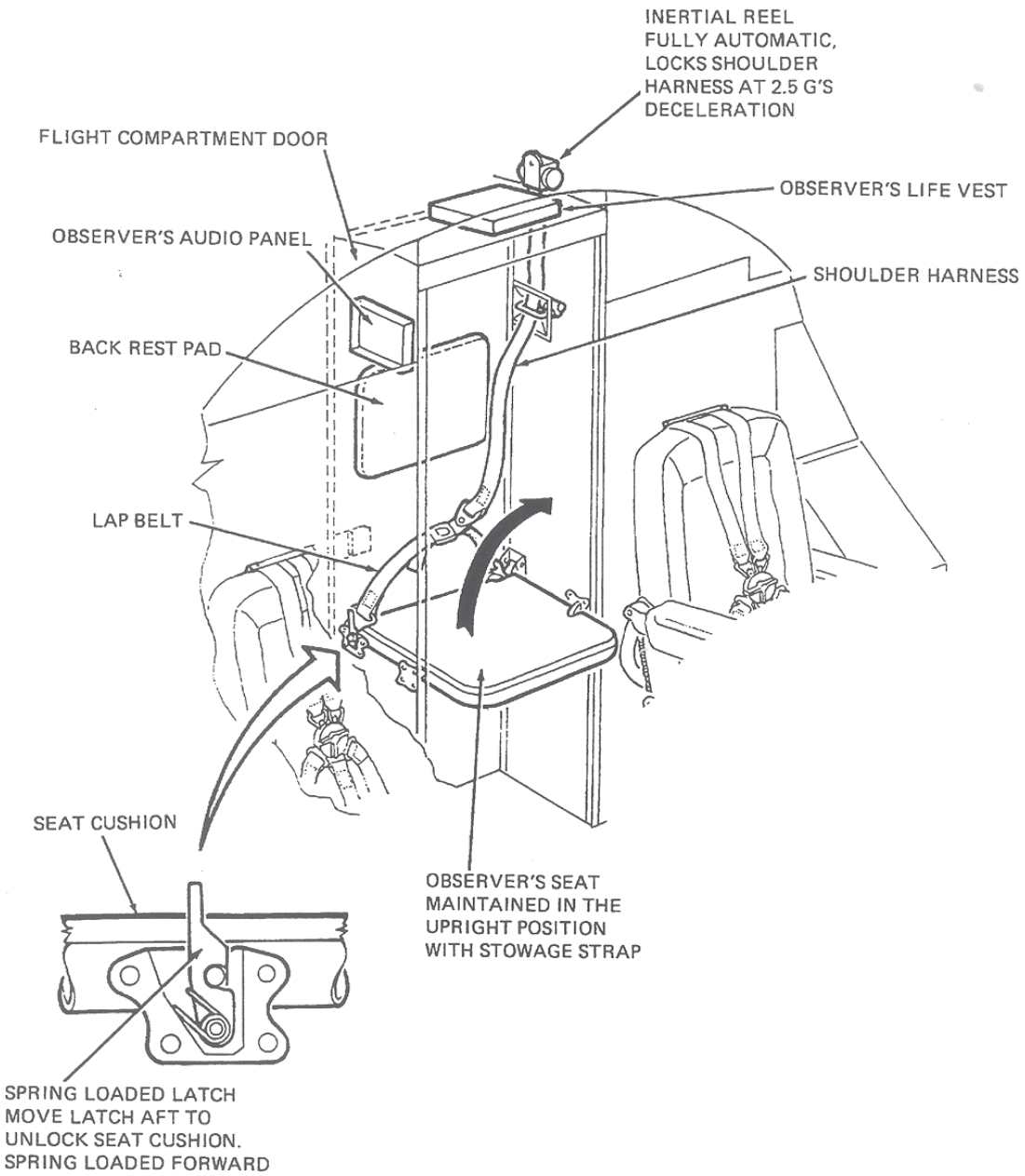

Observer seat

Flight compartment lighting

Utility and dome lights in the flight compartment ceiling and map lights located on the flight compartment sidewalls provide flight compartment area lighting. Specialized lighting is also provided for circuit breaker panels, instrument and control panels, observer area, and thunderstorm panel lighting.

5-volt miniature lamps embedded into the panels the flight compartment panels and the instruments and controllers located on them. Instruments and controllers are integrally illuminated by 5-volt lamps with the exception of the standby compass internal lighting and digital clock displays which use 28-volt DC electrical power. The standby compass is dimmed with the advisory lights and a switch on each clock dims the clock displays. The six power supplies for the variable intensity 5-volt DC lighting system are located in the electrical equipment rack behind the forward galley equipment stowage area.

The 28-volt DC right main bus supplies lighting power to the right pilot’s flight instrument and side panels, the engine instrument panel, and centre console. The 28-volt DC left main bus energizes the integral lights of the left pilot's flight instrument and side panels, the overhead panel and glareshield panel.

Overhead console, glareshield panel, engine instrument panel, and centre console illumination are controlled by on/off dimming knobs located on the panel lighting panel on the overhead console. The left pilot's flight instrument panel and side panel illumination are controlled by the on/off dimmer knob located on the left side panel. The right pilot’s flight instrument panel and side panel illumination are controlled by the flight panel on/off dimmer knob located on the right side panel.

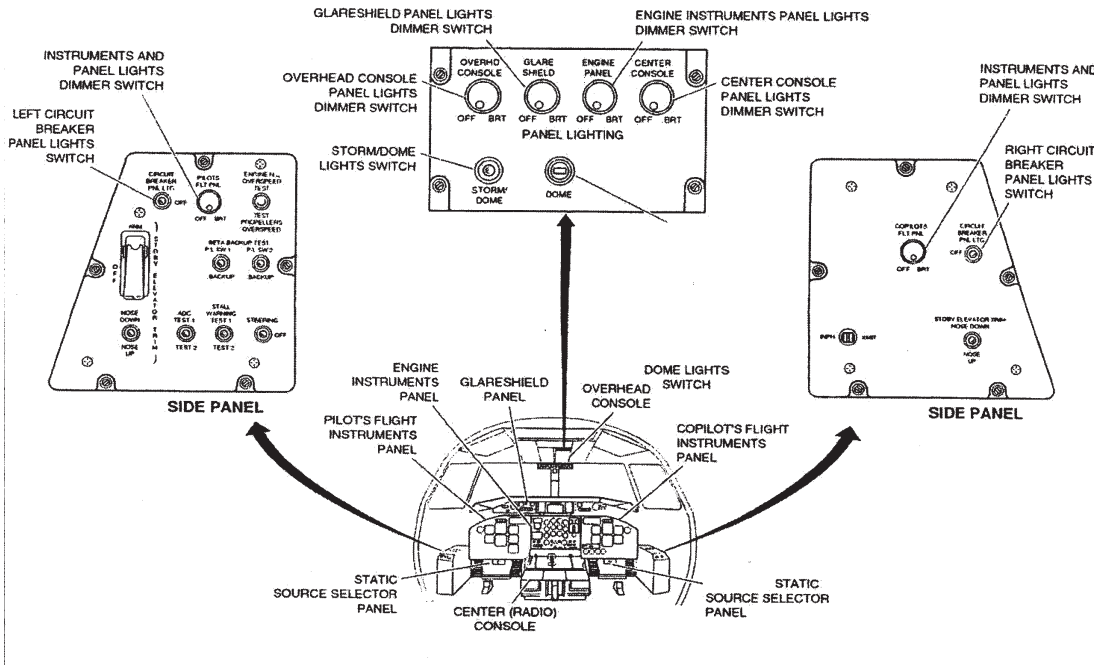

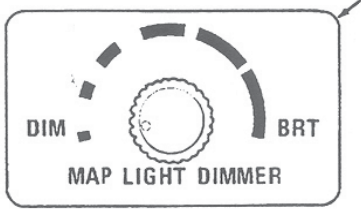

LEFT / RIGHT PILOT'S MAP LIGHT CONTROLS
(rotary action)
ROTATE – regulates the brightness of the map lights

DIM – minimum brightness

BRT – maximum brightness

LEFT / RIGHT PILOT'S SIDE WINDOW

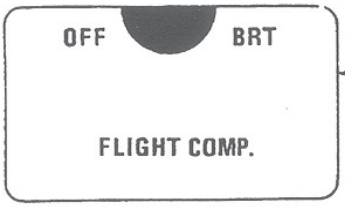

LEFT / RIGHT PILOT'S UTILITY LIGHT CONTROLS
(rotary action)
ROTATE – regulates the brightness of the utility lights

BRT – maximum brightness

LEFT / RIGHT PILOT'S FLIGHT COMPARTMENT CEILING

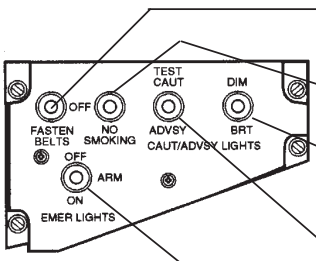

Overhead Panel

FASTEN BELTS SIGN SWITCH (two position toggle action)
OFF - seat belt sign OFF
FASTEN BELTS - seat belt sign ON

NO SMOKING SIGN SWITCH (two position toggle action)
Switch is disabled; NO SMOKING SIGN is always ON

CAUT/ADVSY LIGHTS BRT/DIM SWITCH (three-position toggle action, spring loaded to centre position
DIM – dims all warning, caution and advisory lights
BRT – provides full brightness of all warning, caution and advisory lights

CAUT/ADVSY LIGHTS TEST SWITCH (three position toggle action, spring loaded to centre (OFF) position)
CAUT - Tests the Caution and Warning Lights
ADVSY - Tests the Advisory Lights

EMER LIGHTS SWITCH (three position toggle action)
OFF – emergency lights are OFF, but may be overridden by Cabin Attendant Emergency Light switch
ARM – emergency lights will automatically illuminate upon power loss of RH secondary DC bus power
ON – emergency lights illuminate

CABIN

Cabin layout

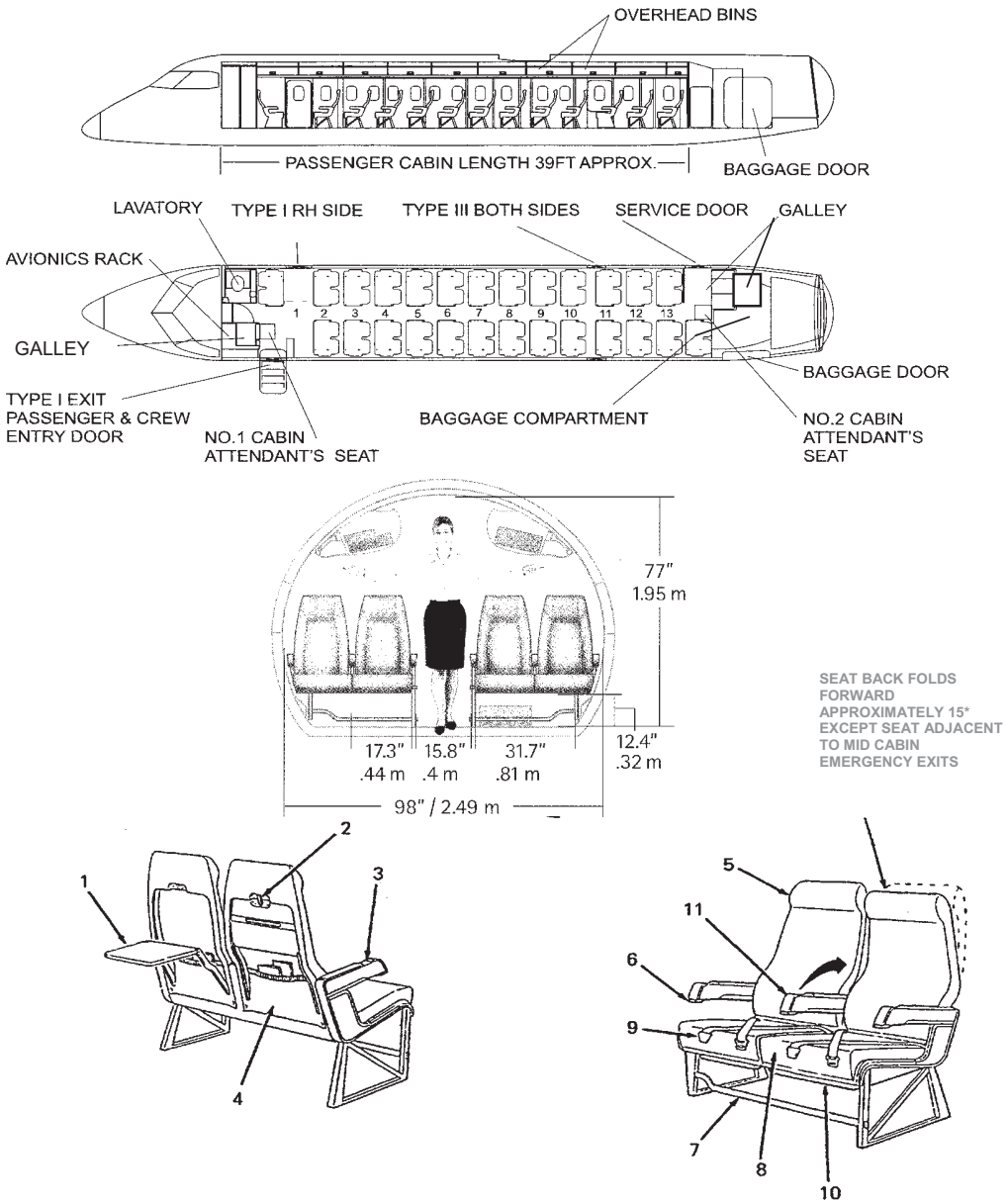

1. FOLD-DOWN TABLE
2. TABLE RETAINER
3. ASH TRAY (ON OUTBOARD & INBOARD ARMREST)
4. INFORMATION POCKET
5. HEADREST
6. MEAL TRAY SOCKETS
7. BAGGAGE RESTRAINT BAR
8. FLOTATION CUSHION (REMOVABLE)
9. LAP BELT
10. LIFE VEST STOWAGE (S.O.O. 8077)
11. PIVOTING CENTRE ARMREST

Passenger cabin layout and seats

Flight attendant seat

The attendant seat is the pull-down type that automatically returns to the stowed position when unoccupied. A combination seat belt/shoulder harness and a padded backrest are installed. A stowage compartment for a life vest and flashlight are also provided. For seat locations refer to the passenger cabin arrangement figure in this section.

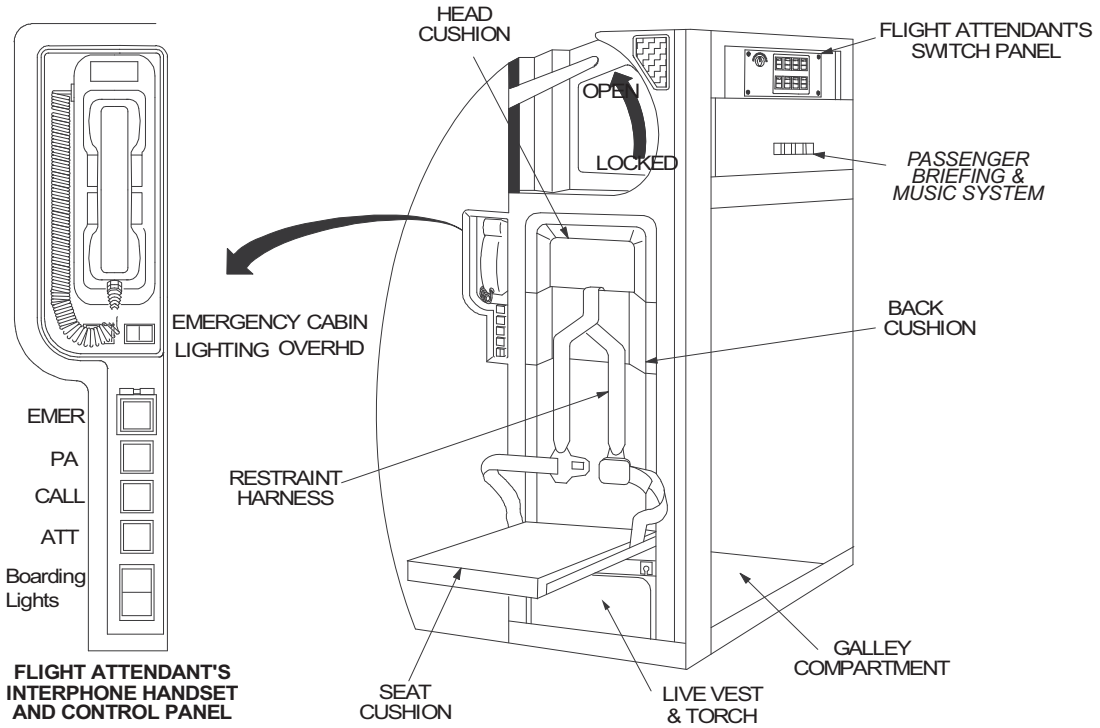

Passenger usable equipment

Seats

The standard aircraft-seating configuration provides for a total of 52 passenger seats, 50 forward facing passenger seats and two rear facing passenger seats at the front of the passenger cabin. The forward facing seats are installed four-abreast on seat tracks at a pitch of approximately 31 inches.
Fold down tables are incorporated into the rear of each seat except the front row seats, which are equipped with plug-in meal tray sockets. An information pocket is provided on the draft bulkhead for passengers in the left front row seats and on the forward emergency exit door for passengers in the right front row seats. Each seat is equipped with armrests, except the seats adjacent to the mid-cabin emergency exits that have armrests incorporated into their interior panels. The centre armrests on all seats fold up. Inboard armrests fold up when the release catch is operated on the underside of the armrest at the hinge point. Each seat is provided with a life vest, which is stowed below the seat. Identification placards are located above each pair of seats on either side of the centre aisle. Seats are identified by row number from the front of the aircraft and by a letter designating the row position of the seat.

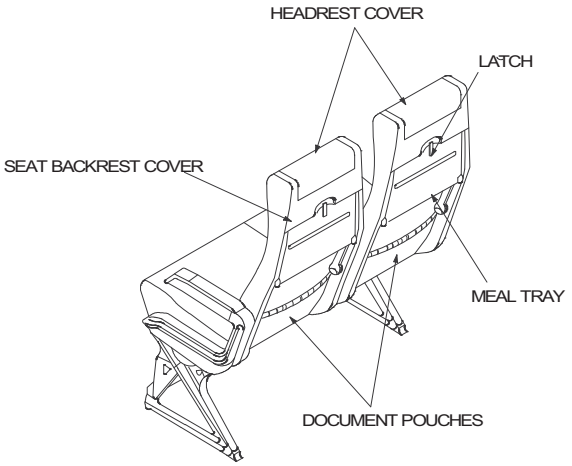

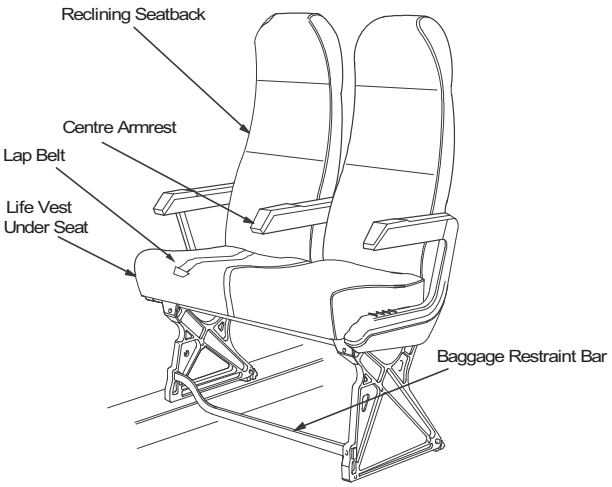

Passenger seats

Overhead stowage bins

Overhead stowage bins are provided on both sides of the passenger cabin for stowage of coats and light baggage. The bins are located above the passenger seats. Each bin is hinged to open upwards and, with the exception of the forward and aft bin on each side has a load limit of 23 KG. The forward bin on each side of the aircraft is limited to 18 Kg. The bin at the end of each row has a load limit of 10 Kg.

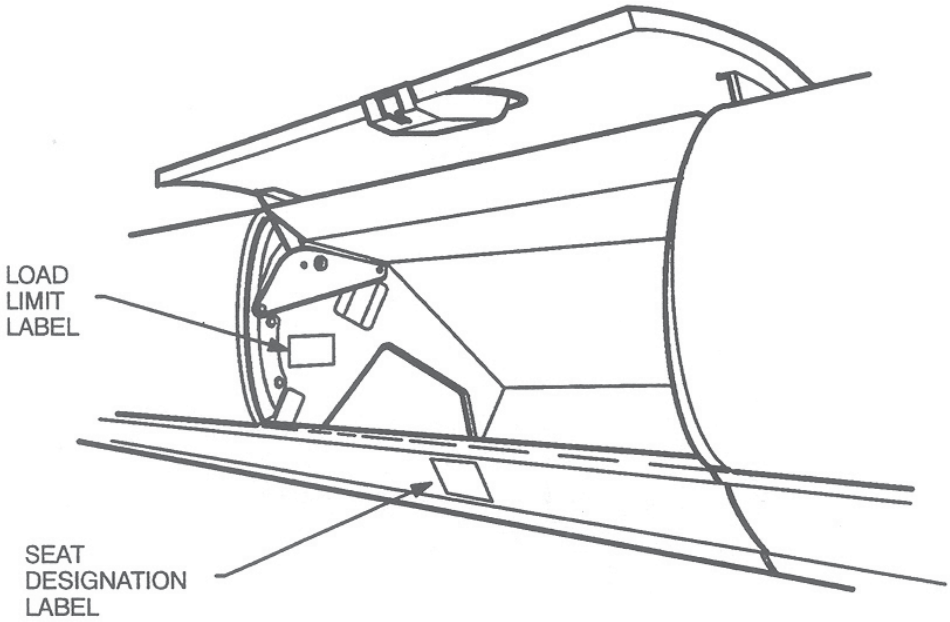

Passenger service units

Passenger service units (PSU's) are installed along the bottom of the overhead bins above each pair of seats. Each PSU is equipped with adjustable air outlets (gaspers), reading lights with individual switches and an attendant call button.

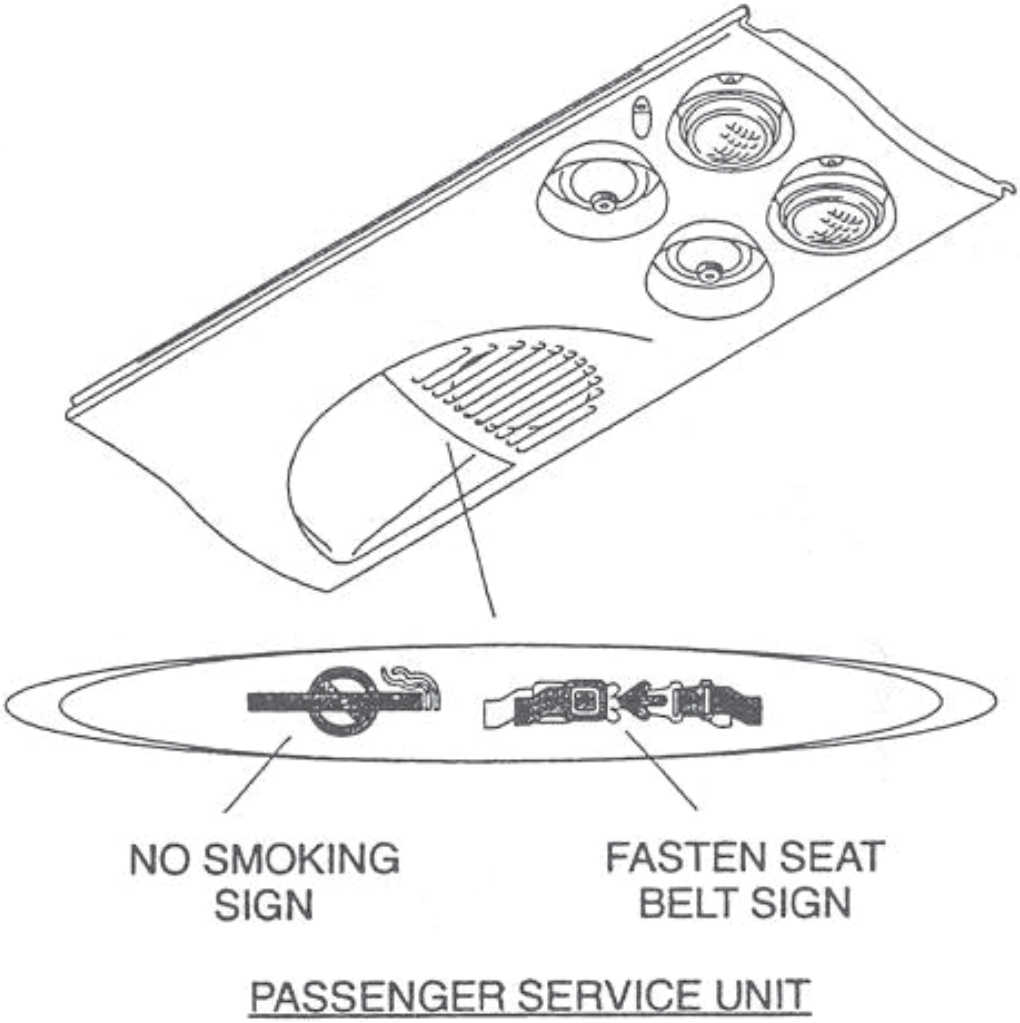

PASSENGER SERVICE UNIT

Flight attendant's control and indication panels

The Flight Attendant's advisory light panel is located below the aft passenger advisory lights sign adjacent to the mid-cabin emergency exits. The Flight Attendant's advisory lights are visible throughout the cabin and consist of a lavatory smoke detector light, remote emergency light, flight attendant call light, service call light (actuated by Flight Attendant call pushbutton in lavatory) and a remote PA light. The remote emergency light and the remote PA light are actuated by the comparable selection on the Flight Attendant's PA control panel. The flight attendant call light is activated by the attendant call pushbutton on each PSU. A small red light also illuminates adjacent to the ATT CALL pushbutton on the PSU. Pressing the button again resets the call light.

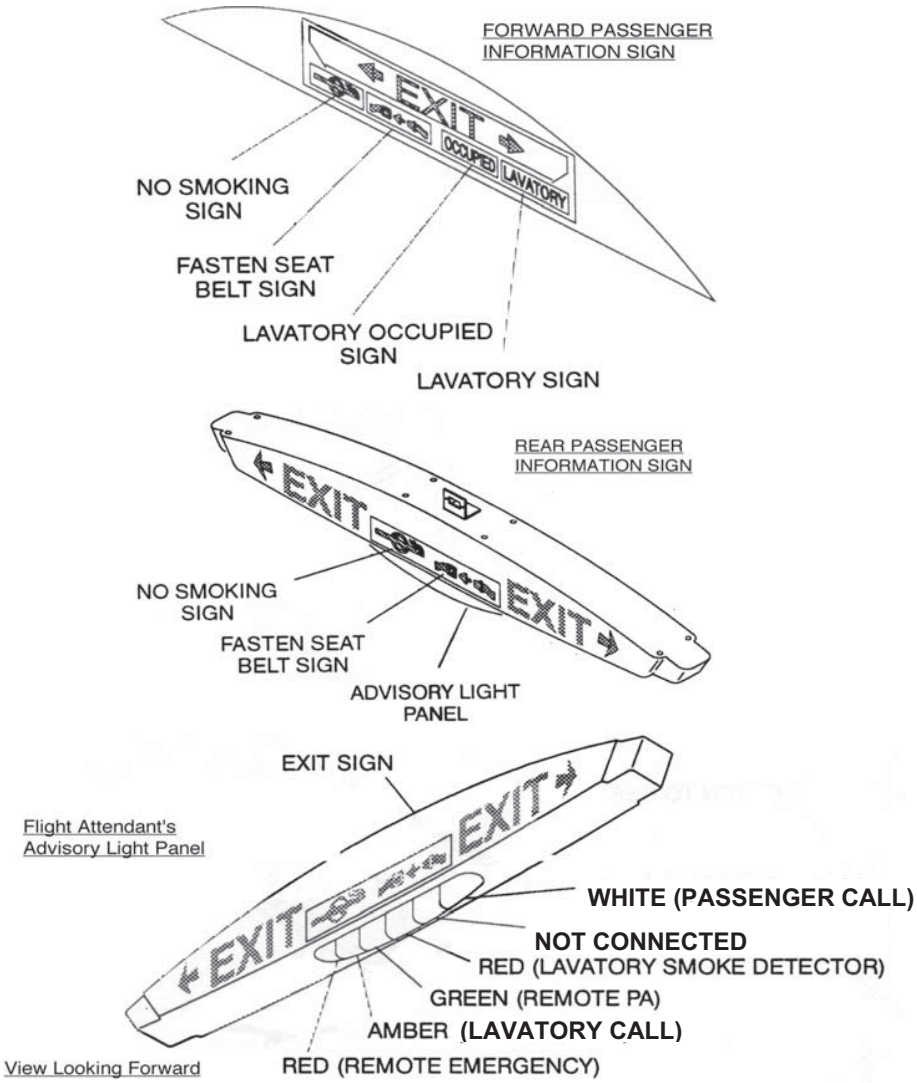

CABIN OVERHEAD LIGHT SWITCH (momentary action)

PRESS - turn on overhead fluorescent lights along length of cabin above the overhead bins.

LAVATORY LIGHT SWITCH (momentary action)

PRESS - turns on lights in lavatory at low level.
- locking lavatory door from inside turns on lavatory lights at maximum level.

PSU ON/OFF SWITCH (momentary action)

PRESS - provides power to PSU reading lights which are individually controlled by attached ON/OFF switches.

CABIN TEMPERATURE SWITCHES AND INDICATOR (momentary action)

- press warmer or cooler switch to set cabin temperature
- indicator displays level of temperature set

PSU TEST SWITCH (momentary action)

PRESS - turns on all PSU lights.

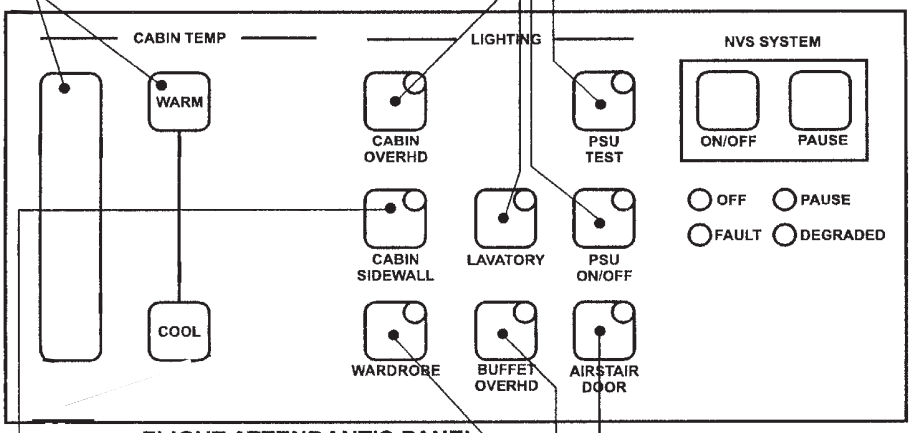

FLIGHT ATTENDANT'S PANEL

AIRSTAIR DOOR LIGHT SWITCH (momentary action)

PRESS - turns on airstair door lights

BUFFET OVERHEAD LIGHT SWITCH (momentary action)

PRESS - turns on ceiling dome light above galley.

CABIN SIDEWALL LIGHT SWITCH (momentary action)

PRESS - turns on cabin sidewall fluorescent lights along length of cabin below overhead bins

WARDROBE LIGHT SWITCH (momentary action)

PRESS - turns on fluorescent light in wardrobe.

Master display panel

Passenger compartment lighting

Passenger compartment lighting is provided by overhead lights, located above the baggage bins throughout the length of the cabin. Standard sidewall lighting provides wash lighting to the sidewall/window area. The cabin lights, lavatory compartment, airstair door and buffet lights are controlled from the Master Display Panel located on the forward bulkhead of the left overhead luggage bin, adjacent to the airstair door.

Passenger information signs

Passenger information signs are integrated into the EXIT signs located in the passenger compartment ceiling panels adjacent to the front and rear emergency exits.

The forward EXIT sign displays international graphics for no smoking and fasten seat belts and a LAVATORY OCCUPIED sign. Illumination of the fasten seat belts sign is controlled from the flight compartment. The no smoking sign is always on and cannot be switched off. The lavatory sign remains illuminated while the OCCUPIED section illuminated when the lavatory door is latched closed.

The rear EXIT sign displays only international graphics for no smoking and fasten seat belts. The illumination of these signs is controlled as described above.

Emergency lights

An emergency light system provides illumination of the flight compartment, passenger compartment, exit signs, and exit areas from independent sources of battery power for emergency evacuation of the aircraft. The flight compartment emergency light is removable for portable operation. Additional information on emergency lighting may be found in section 12-7 emergency equipment.

Galley

The main galley (A) is located in the aft right side of the cabin. The galley provides stowage for two service trolleys and a coffee brewer. Removable units are retained either by latches or latched doors. The galley also incorporates stowage compartments and drawers, a lighted work surface with a drain and a waste bin. The waste flap assembly at the right side of the work top assembly gives access to the waste bin. Overhead lighting for the galley is controlled by the buffet overhead switchlight on the Flight Attendant's Panel. Circuit breakers and switches for the coffee brewer and the counter light are located adjacent to the hot jugs.

Directly behind the forward flight attendant seat is the forward service stowage area (B). This provides stowage for a service trolley, as well as miscellaneous stowage compartments and a waste receptacle. As with the rear galley area, all removable units are retained by latches or latched doors.

Additional storage has been arranged in the forward right side of the cargo compartment (C), immediately aft of the rear galley partition. This stowage area provides space for two extra service trolleys, as well as having miscellaneous stowage compartments.

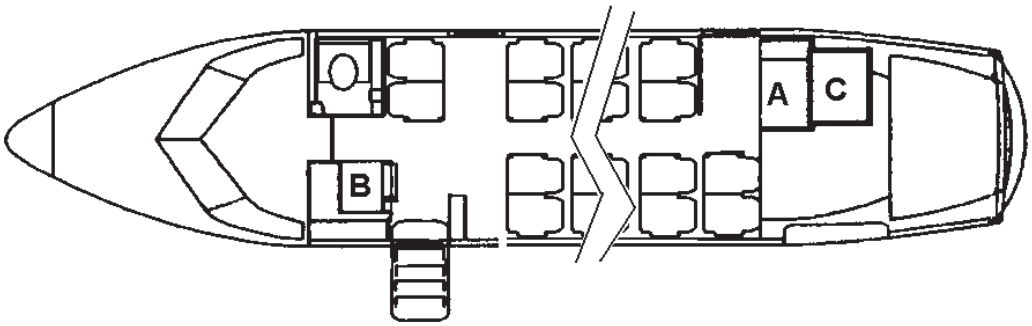

Galley plan

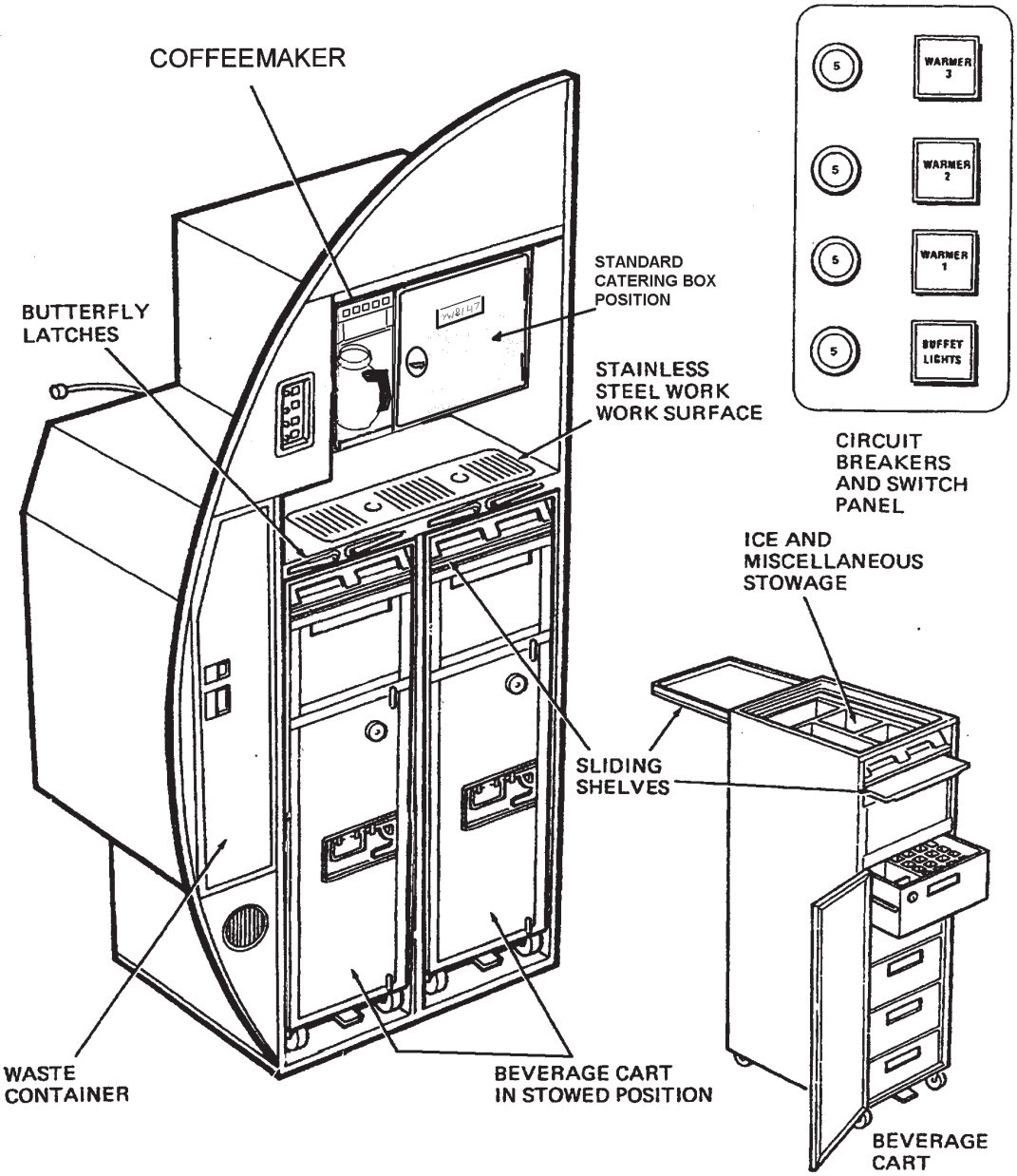
COFFEEMAKER
BUTTERFLY LATCHES
STANDARD CATERING BOX POSITION
STAINLESS STEEL WORK WORK SURFACE
WARMER 3
WARMER 2
WARMER 1
BUFFET LIGHTS
CIRCUIT BREAKERS AND SWITCH PANEL
ICE AND MISCELLANEOUS STOWAGE
SLIDING SHELVES
WASTE CONTAINER
BEVERAGE CART IN STOWED POSITION
BEVERAGE CART

Lavatory

The lavatory compartment is located at the forward right side of the cabin and contains a toilet, toilet tissue dispenser, smoke dispenser, wash basin (including warm water wash system), mirror, vanity items and waste disposal with fire extinguisher.

Closing the door slide lock mechanism turns on an additional lavatory light, displays an OCCUPIED sign on the outside of the door and illuminates a LAVATORY OCCUPIED sign on the Passenger Information Panel. However, provisions are made for unlocking the door from the cabin in the event of an emergency.
A flight attendant call button is provided in the lavatory. When pushed, it sounds the P/A high chimes and illuminates the amber attendant call light on the overhead passenger compartment advisory light panel.

A RETURN TO SEAT sign in the lavatory illuminates when the fasten seat belts sign switch in the flight compartment is selected on.

The toilet unit is an electrically operated re-circulating flush toilet incorporating a bowl, 28 VDC electric flush pump with filter, timer waste reservoir and flush knob located on the aft vertical panel under the faucet.. An external service panel with ground flush line is provided at the forward right side of the fuselage permitting waste reservoir to be flushed and cleaned with standard ground service equipment.

Pressing the toilet flush knob applies electrical power to the flush pumps and timer for a pre-timed interval of approximately 5 ± 2 seconds. During the flush cycle, flushing fluid is circulated from the reservoir through a filter basket to the flush channel at the rim of the bowl and then returned to the reservoir. When operating in sub-zero temperatures, anti-freeze may be added to the cleansing fluid. In the event of an electrical or mechanical failure of the pump or its control circuitry, the toilet remains usable as a chemical toilet.

The warm water wash system provides warm water to the sink in the lavatory compartment. Water for the system is provided from a heated tank located below the aircraft floor. The tank is made from stainless steel and has a capacity of 12 litres. The warm water wash system can be selected off and on with the AUTO/OFF switch on the panel above the forward galley equipment area. When the switch is in the OFF position, the light on the switch will be on. The temperature of the warm water when it leaves the tank is approximately 40 degrees Celsius. When electrical power is available to the aircraft and the ambient temperature is below freezing, the heater fan, which is located under the cabin floor, will operate to heat the insulated compartment containing the tank and plumbing to above the freezing level.

The low temperature (LED) indicating light located on the wardrobe facia panel will illuminate when the system is below freezing. After the system components warm up to above freezing temperature, the low temperature (LED) light will go off and the warm water wash system is ready for use. Wastewater from the sink unit is drained by gravity through the insulated drain tube to the heated drain mast, to the exterior of the aircraft. Prior to storage of the aircraft in temperatures below freezing, the system may be drained completely from the external service panel. The system temperature must be raised to above freezing prior to replenishing the reservoir.

A drain is provided on the lavatory floor and connected to a drain mast located below the lavatory underside of the fuselage.

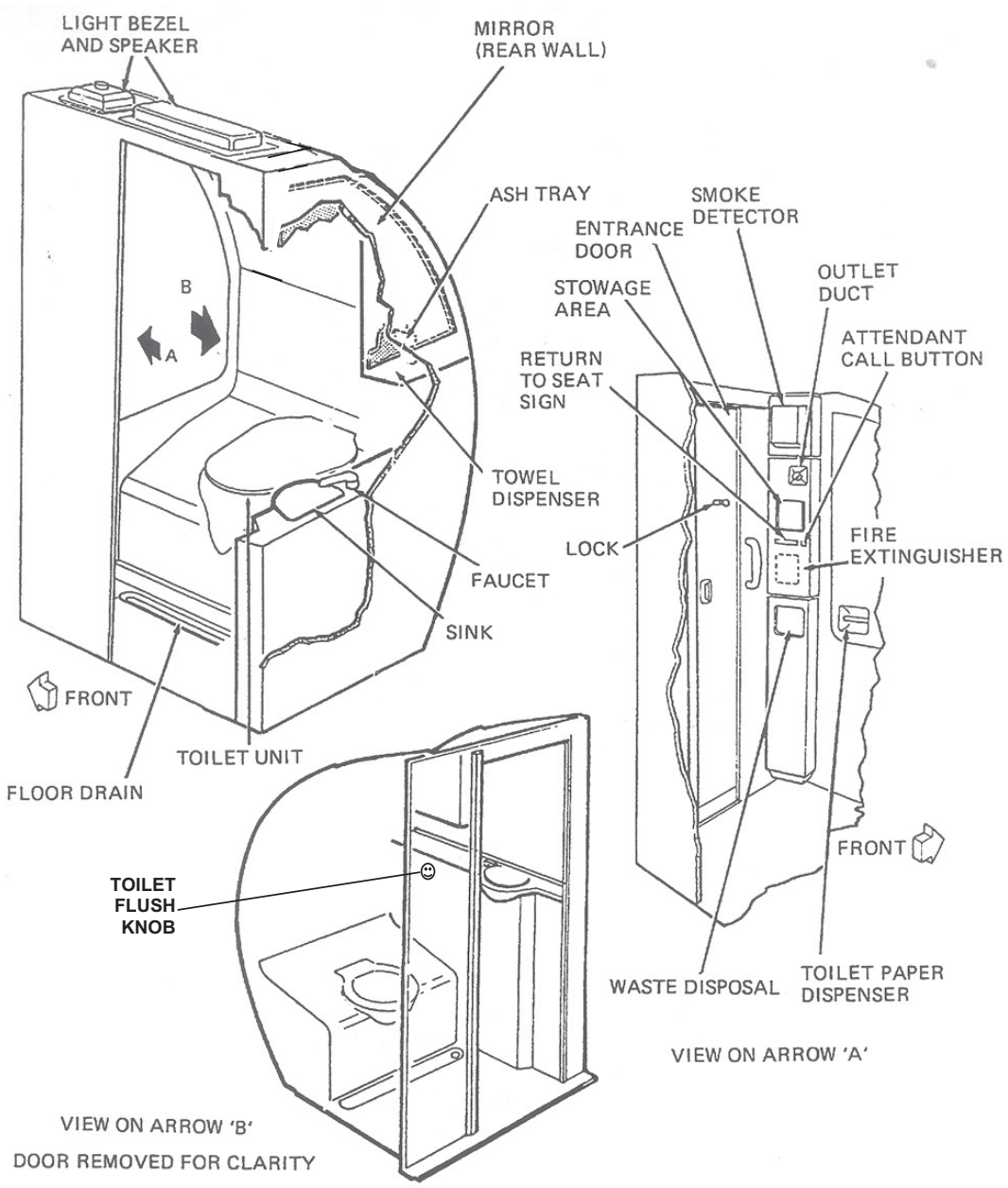
LIGHT BEZEL
AND SPEAKER
MIRROR
(REAR WALL)
ASH TRAY
SMOKE
DETECTOR
ENTRANCE
DOOR
OUTLET
DUCT
STOWAGE
AREA
ATTENDANT
CALL BUTTON
RETURN
TO SEAT
SIGN
B
A
TOWEL
DISPENSER
LOCK
FIRE
EXTINGUISHER
FAUCET
SINK
FRONT
TOILET UNIT
FLOOR DRAIN
FRONT
TOILET
FLUSH
KNOB
WASTE DISPOSAL
TOILET PAPER
DISPENSER
VIEW ON ARROW 'A'
VIEW ON ARROW 'B'
DOOR REMOVED FOR CLARITY

Active Noise and Vibration System (ANVS)

The active noise and vibration system reduces passenger cabin noise caused by the aircraft propellers. The systems senses cabin noise and frequency and uses this data to produce an opposing anti-phase noise through the active tuned vibration attenuators (ATVA's). The propeller noise and the ATVA-produced noise combine and cancel each other which results in a quieter cabin.

The ANVS system consists of an active noise control unit, microphones, active tuned vibration attenuators (ATVA's) and power amplifiers to operate the ATVA's. The ON/OFF switch and system status indicators (FAULT or DEGRADED) are located on the flight attendant's panel adjacent to the passenger door. Microphones are installed throughout the passenger cabin, overhead bins and interior trim panels. ATVA's located throughout the cabin, are electro-mechanically operated vibrating devices that are attached to the fuselage frames.

The ANVS control unit receives propeller frequency data from propeller tachometer signals. Additional noise data is received from microphones in the cabin. The active noise control unit responds by actuating the ATVA's at a frequency and force required to suppress the propeller noise. The ANVS system does not respond to normal cabin sound such as conversation, music or PA announcements.

The active noise and vibration system is designed to operate automatically. The ON/OFF switch default position is ON. The system is continuously self-monitoring and failure or partial failure will result in illumination of either the FAULT light or the DEGRADED light on the flight attendant's panel. Illumination of the FAULT light indicates the ANVS system is inoperative. Illumination of the DEGRADED light indicates the system remains operational at a degraded level of noise suppression. In either case, maintenance personnel should be informed.

A significant increase in cabin noise, particularly localized buzzing or rattling, may indicate a fault with the ANVS system. This change in noise level will be apparent to the flight attendants. If this occurs the fight attendant should immediately select the ANVS system OFF, using the ON/OFF switch on the flight attendant's panel. The flight attendant should establish communication with the flight crew using the flight attendants handset and advise the flight crew of the action accomplished. Maintenance personnel should be advised.

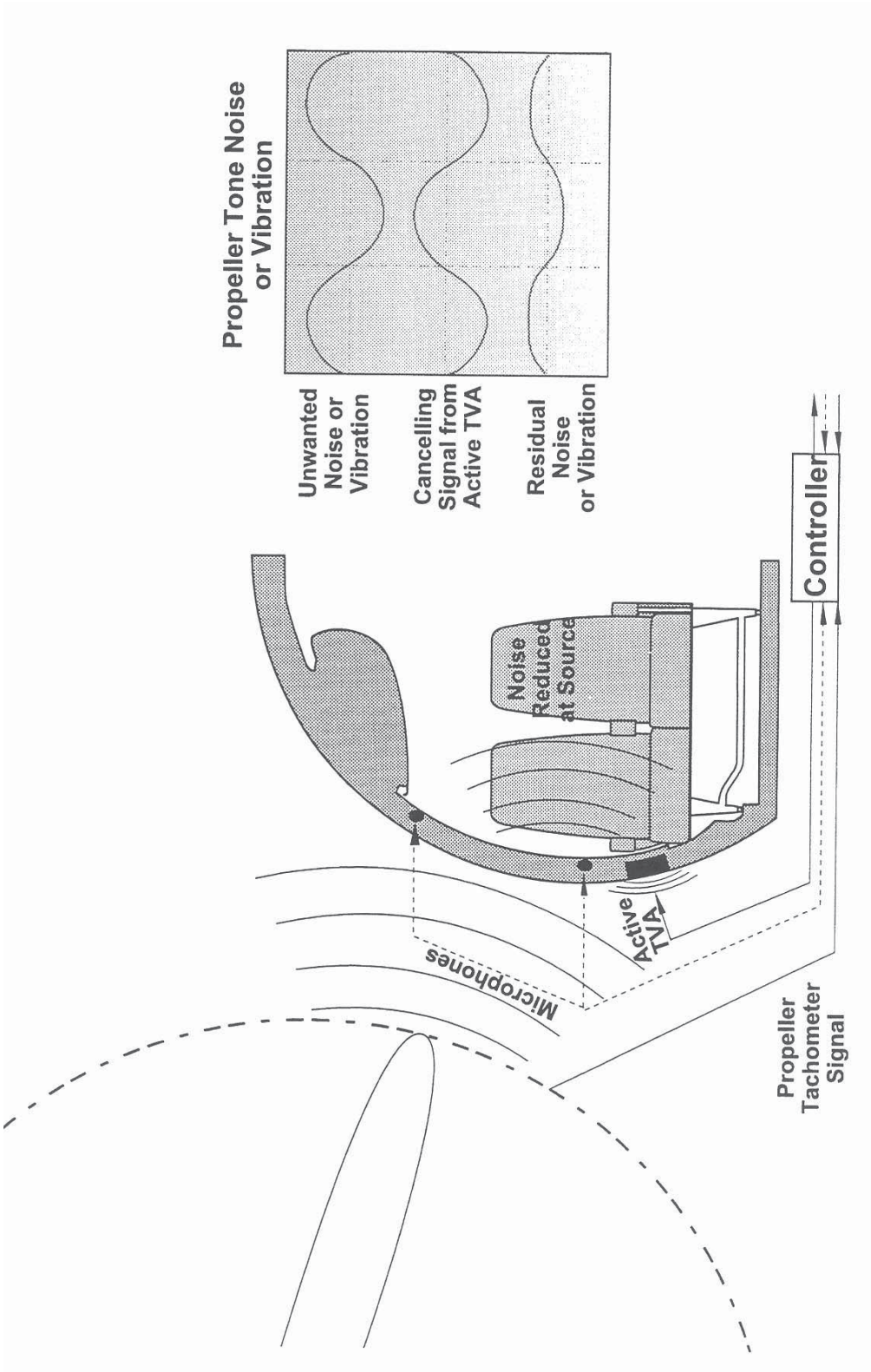
Propeller Tone Noise or Vibration
Unwanted Noise or Vibration
Cancelling Signal from Active TVA
Residual Noise or Vibration
Noise Reduced at Source
Controller
Microphones
Active TVA
Propeller Tachometer Signal

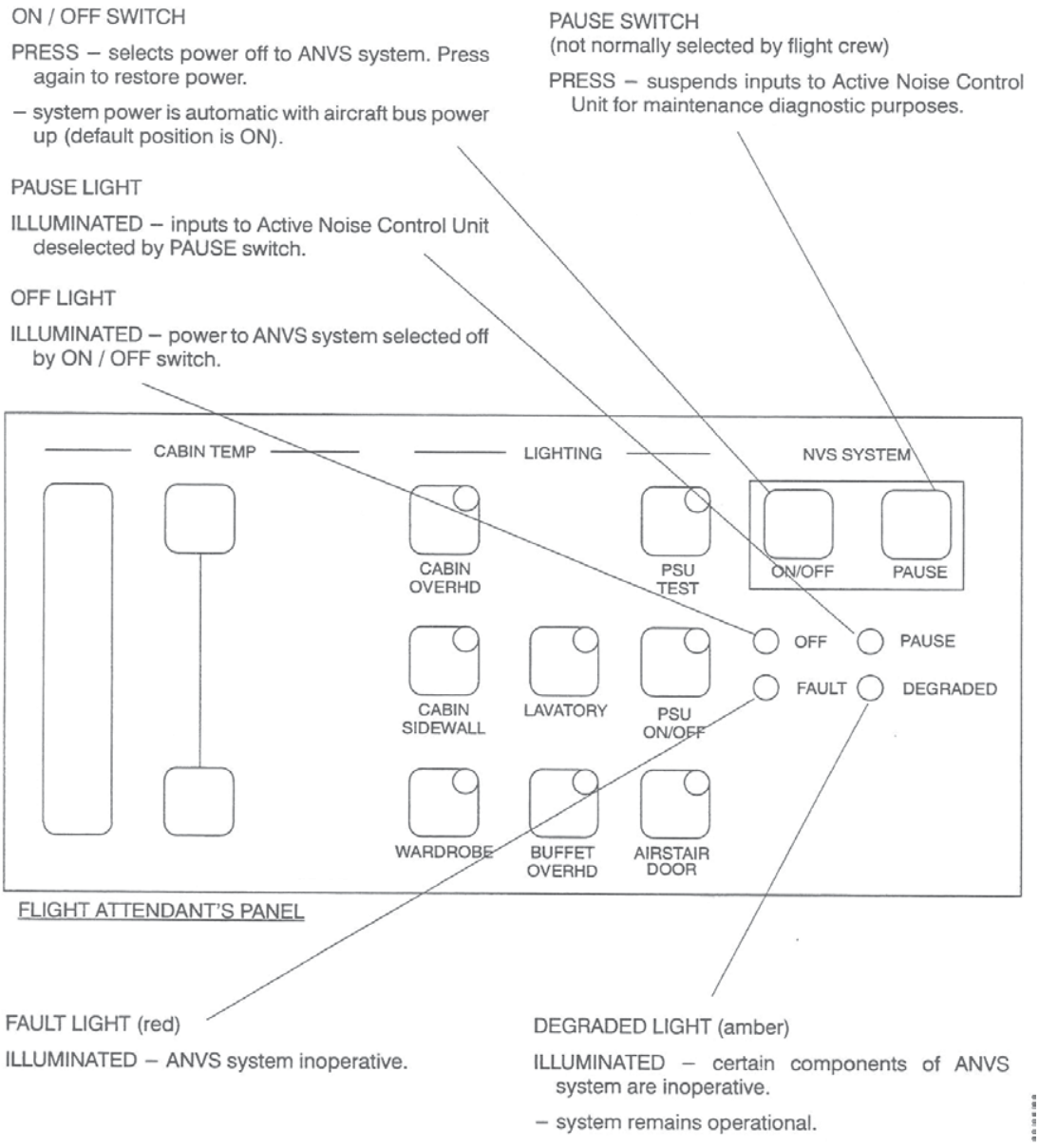

Active Noise and Vibration System (ANVS)

BAGGAGE COMPARTMENT

The baggage compartment is located in the pressurized area of the rear fuselage. External access is through a 1.270 m x 1.524 m cargo door provided on the left side. For baggage door operation refer to figure in the DOORS section of this chapter. An internal access door allows entry into the baggage compartment from the cabin. Ensure baggage access door is closed for take-off and landing. Nets provide a protected area allowing access into the baggage compartment for fire fighting purposes.

The floor is divided into two compartments designated COMPT 1 and 2 (lower floor) and COMPT 2 (upper floor). Tie down rings and fittings are provided for both floors.

Baggage compartment lighting is provided by dome lights, one in the roof and one on the right side of the door entrance and is controlled by a switch on the flight attendant's LIGHTING panel.

Two smoke detectors are provided, one on the divider bulkhead left side and one in the roof. They will illuminate a SMOKE warning light on the caution lights panel if smoke is detected in the baggage compartment.

The weight capacity is 771 kg.

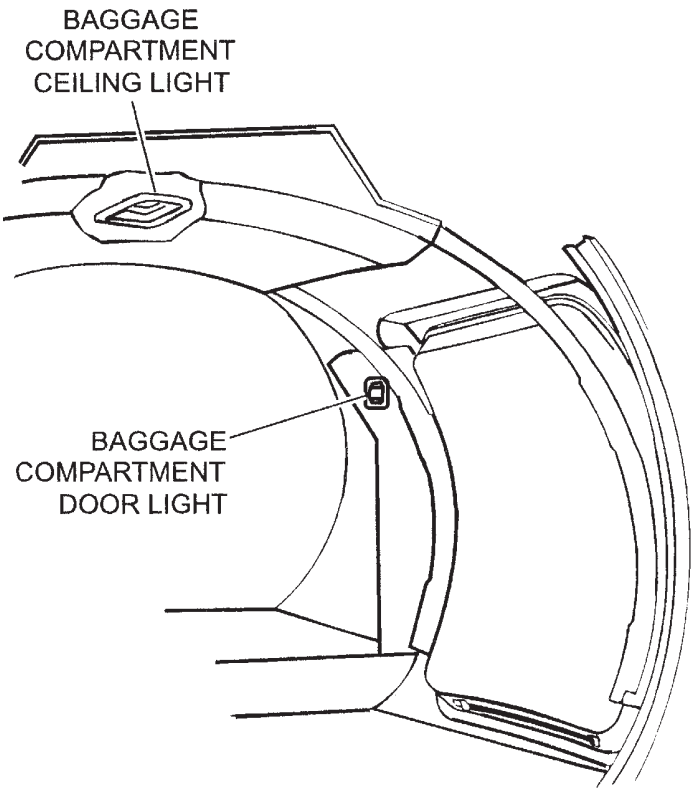

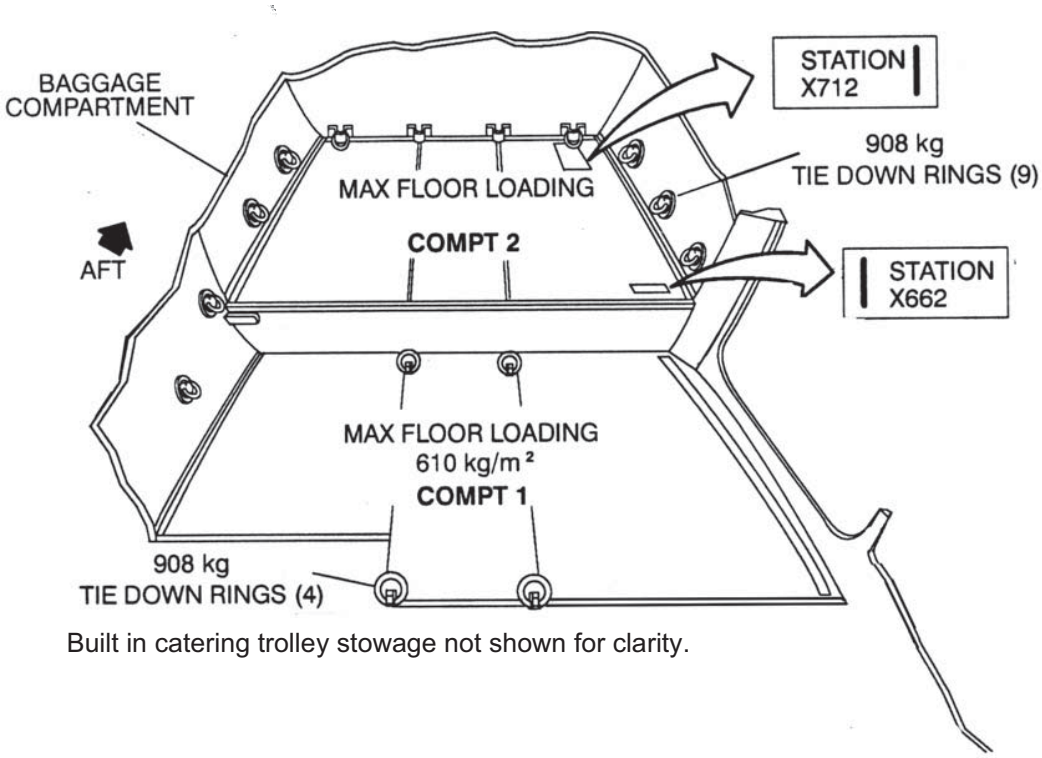

Built in catering trolley stowage not shown for clarity.

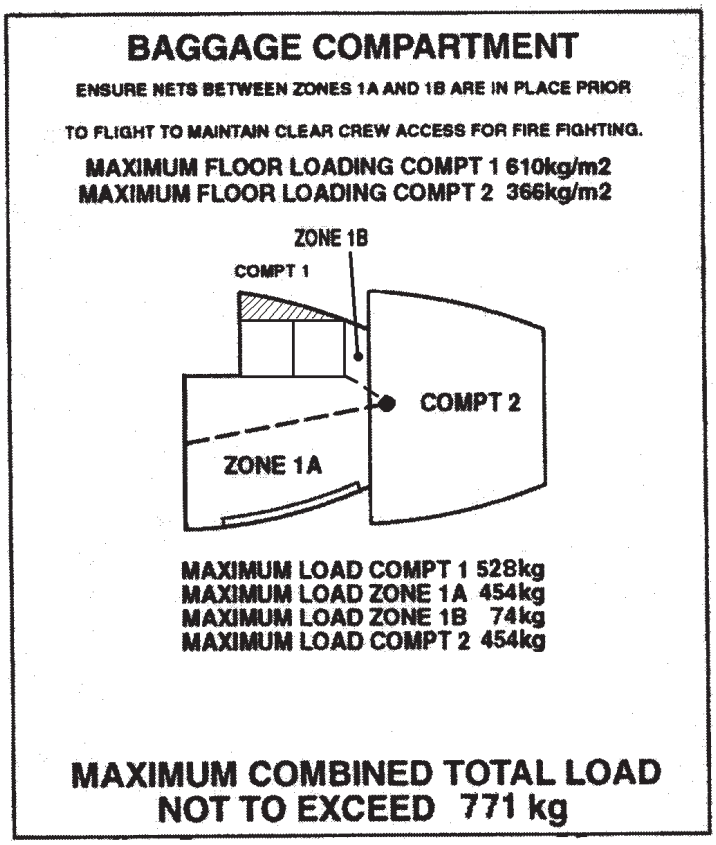

EXTERIOR VIEW

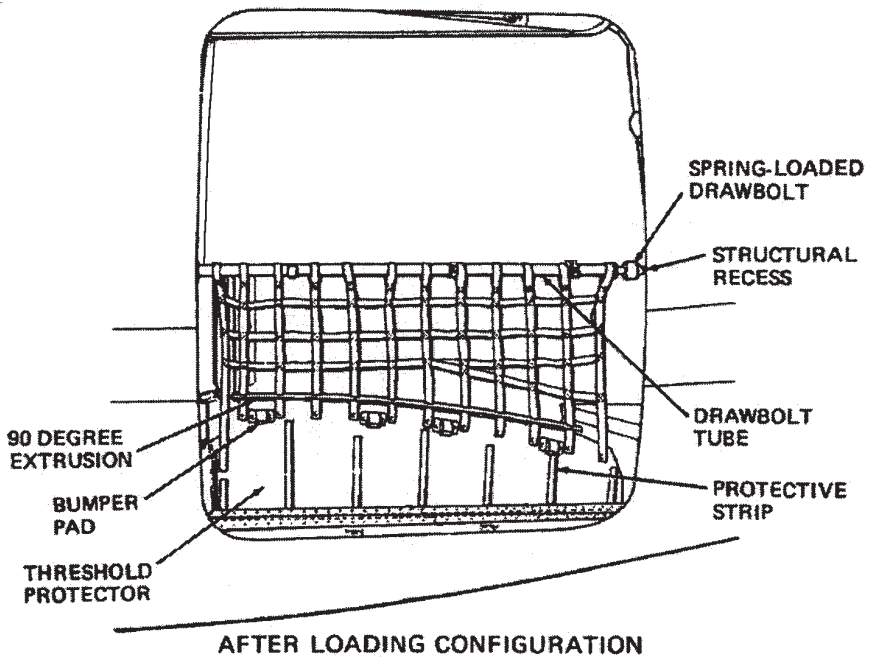

AFTER LOADING CONFIGURATION

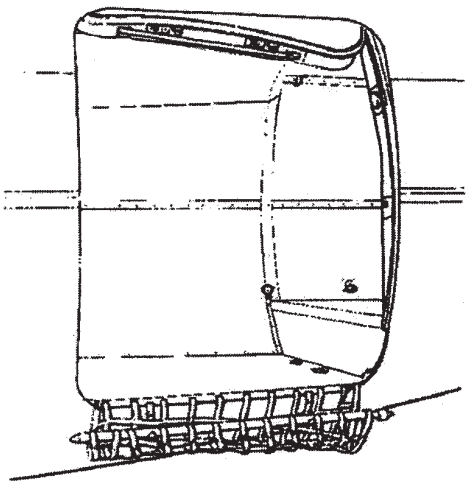

DURING LOADING CONFIGURATION

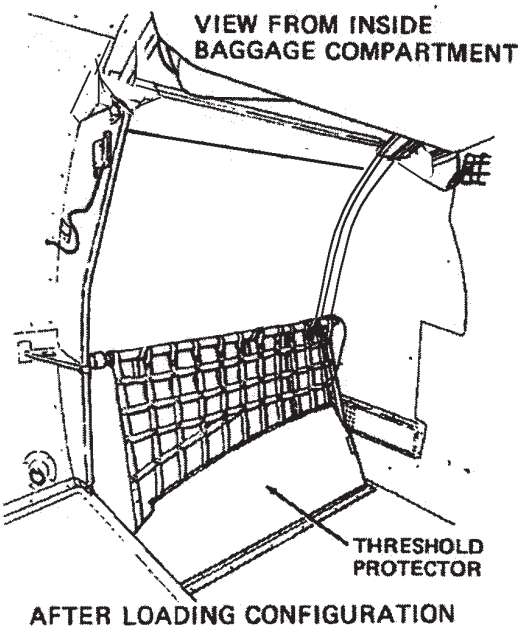

AFTER LOADING CONFIGURATION

NON-NORMAL INDICATIONS AND OPERATION

Warning lights

BAG DOOR	Baggage door not properly closed.
Applicable ECL	DOOR FAILURE.
Remarks	Warn all personnel to remain clear of door. Warning light goes out when door is closed securely.
SERVICE DOOR	Service door not properly closed.
Applicable ECL	DOOR FAILURE.
Remarks	Warning light goes out when door is closed securely.
PASS DOOR	Passenger entry door not properly closed.
Applicable ECL	DOOR FAILURE.
Remarks	Warning light goes out when door is closed securely. Warn all personnel and passengers to remain clear of door.
FWD EXIT DOOR	Forward exit door not properly closed.
Applicable ECL	DOOR FAILURE.
Remarks	Warning light goes out when door is closed securely. Warn all personnel and passengers to remain clear of door.