ENGINE

GENERAL

Jet engines produce thrust by accelerating air. It is the product of the mass of the air times the increase in velocity that determines thrust output. To generate a given amount of thrust, a small volume of air can be accelerated to a very high velocity, or a relatively large amount can be accelerated to a lower velocity.

In a turbofan engine, with which the Citation X is equipped, only a portion of incoming air is combusted. The combusted hot air drives the compressor, and a fan which is used to accelerate a large volume of uncombusted air at a lower velocity. This uncombusted air is bypassed around the engine and exhausted at the rear, being mixed with the combustion exhaust. The relation of the total mass of bypassed air, to the amount of air going through the combustion section, is known as the Bypass Ratio.

The Allison AE3007C1 engine, installed in the Citation X Model 750, is a high-bypass ratio two spool, axial flow, turbofan engine rated at 6764 pounds static thrust at sea level. The engine is flat rated up to 86°F (30°C) ambient temperature (ISA +27°F, ISA +15°C). The bypass ratio is approximately 5.0 to 1.0. A concentric shaft system supports the 24-blade single-stage fan and the turbine rotors. The inner shaft connects the fan (N_1) at the front of the engine to the three-stage low pressure turbine assembly at the rear of the engine. The outer shaft connects the fourteen-stage axial flow compressor (N_2) and the two-stage high pressure turbine. Both low pressure and high pressure spools are mounted on co-axial shafts, but are not mechanically connected. The high pressure spool drives the accessory gearbox through a set of bevel gears and a radial drive tower shaft which is splined to the input bevel gear of the accessory gearbox. The fourteen-stage axial compressor has six variable vane stages, which includes the inlet guide vanes.

All intake air passes through the inlet-fan case, and is compressed by the single-stage fan. Immediately aft of the fan the airflow is divided by the concentric duct into a bypass stream that goes through the bypass duct and a core stream that goes to the fourteen-stage axial flow high pressure compressor. Most of the total airflow is bypassed around the engine through the outer duct and is exhausted at the rear. Inner duct air which has passed through the fan, where compression began, is directed through the inlet guide vanes and into the compressor where it is further compressed. Nonrotating stator rings, installed between each compressor wheel, act as small diffuser ducts allowing air velocity to diminish and pressure to increase. The air is then discharged into the integrated diffuser/combustion casing where it is mixed with atomized fuel supplied by sixteen fuel nozzles. The fuel-air mixture is ignited by two igniter plugs. After ignition cutout, during the starting process, combustion is self sustaining. The resultant combustion gases are directed through a set of vanes (stators) to the two-stage high pressure turbine.

Part of the energy available in the hot high pressure air is absorbed by the high pressure turbine which drives the axial flow compressor. As the expanding gases move rearward, they pass through another set of vanes (stators) and enter the three-stage low pressure turbine. Some of the remaining energy is extracted there and transmitted forward by the inner shaft to the fan. The hot engine exhaust is passed through a forced exhaust mixer at the rear of the engine where it, and the uncombusted bypass air, is mixed at the forced exhaust mixer, and is exhausted into the air.

The turbofan is in effect two interrelated power plants. One section is designed to produce energy in the form of high velocity, hot air. The other utilizes some of this air to provide the power to drive the fan. The high-bypass AE 3007C1 engine provides the required combination of efficient fan operation for good takeoff performance and lower altitude operation, coupled with the requisite high exhaust velocity and volume for efficient high speed, high altitude operation.

ENGINE AIRFLOW

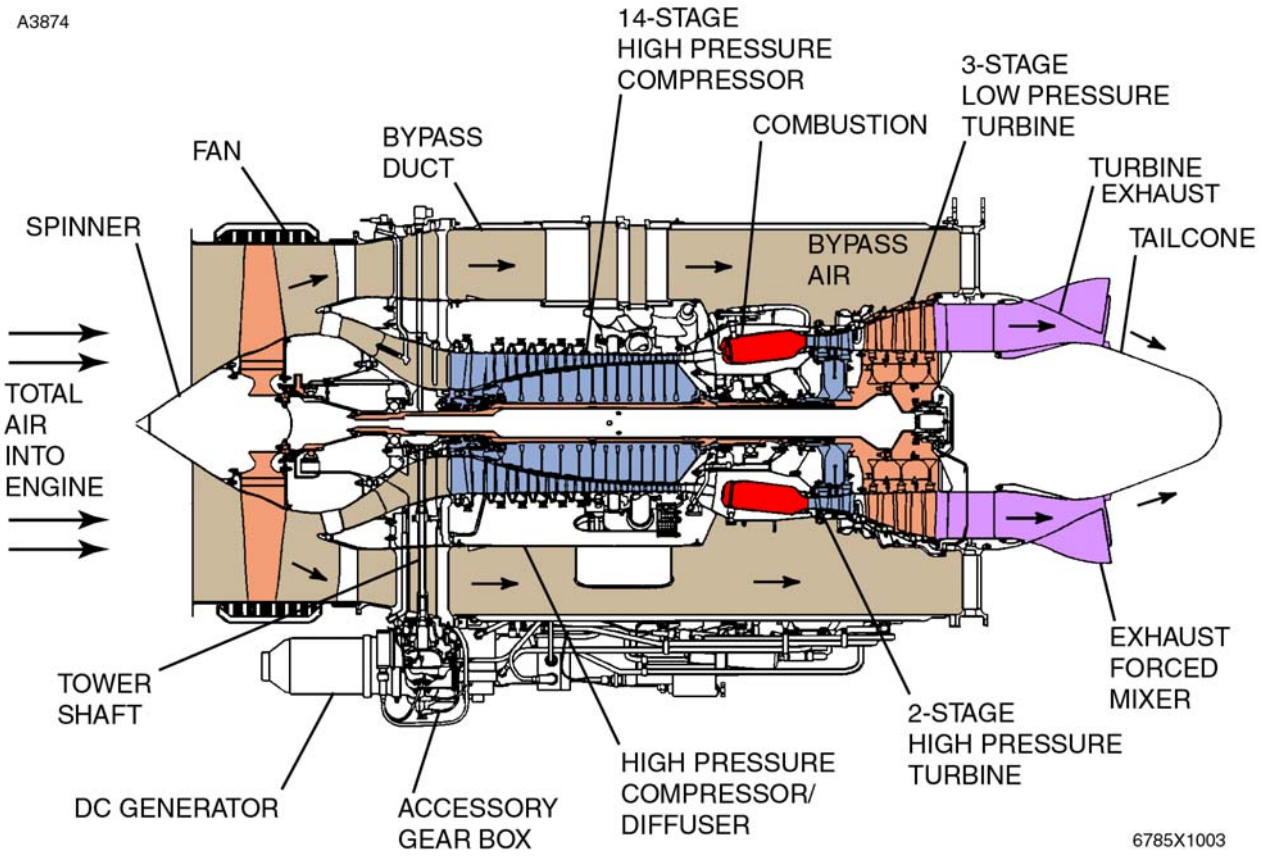

Figure 2-1

Control of the engines is accomplished by an advanced electronic system called Full Authority Digital Engine Control (FADEC). The FADEC is the controlling computer of the engine control system. Fuel supply to the engine is controlled to provide the thrust requested by the pilot (via the throttle lever angle - TLA). The system is dual redundant, having dual (A and B) FADECs, with only one FADEC in control of an engine at one time. It includes limiters, fault detection and accommodation, and reversionary control modes. The FADEC which is not in command is fully operational at all times and is capable of automatically assuming control of the engine, should the FADEC in command experience a fault. The FADEC systems, as well as the various engine systems and subsystems, are discussed below.

FULL AUTHORITY DIGITAL ENGINE CONTROL (FADEC)

Each engine has dual FADECs (A and B). Both FADECs are operating all of the time, however, only one is in command of an engine at any one time. The FADEC which is not in command will automatically assume command of the engine in case of a FADEC failure. Both FADECs (A and B) for both engines must be functioning in normal mode for dispatch. Selection of the FADECs is by the LH and RH FADEC RESET/NORM/SELECT switches. These switches are spring loaded to NORM. Momentarily pressing the switch to SELECT will select the opposite FADEC, except that the FADEC will not allow selection of a failed FADEC. Momentarily pressing the switch to RESET resets the fault memory only; it does not clear the fault.

The FADECs are automatically alternated at each engine start, to ensure equal use and reliability, therefore do not arbitrarily select alternate FADECs.

FADEC power is provided by 28 volt direct current (DC) power from the airplane battery or by engine driven permanent magnet alternators (PMA). The PMAs provide power for the engine ignition system after the engine reaches approximately 10% N_2 RPM on start and, if the engine is running, will continue to supply FADEC power to allow continued engine operation. The PMAs are the primary power source; the battery provides backup power and power for starting only.

Information is provided to the FADECs by the dual resolvers on each throttle lever in the throttle quadrant, from the dual air data computers, and from the various cockpit and aircraft switches. In order to schedule engine thrust, the FADECs compare the data from the dual air data computers. If there is a discrepancy, the FADECs will select the air data which most closely agrees with the engine internal temperature and pressure. The FADECs compute thrust commanded by the throttle lever resolvers and transmit engine data to the EICAS cockpit displays.

The FADEC in command schedules actual engine thrust and displays it as tape and digital N_1 in the EICAS engine display. The FADEC not-in-command displays commanded thrust as a digital target (the lower value of that computed by both the left and right not-in-command FADECs) and the N_1 target bugs. All other EICAS displayed engine data is from the FADEC in command. In case of failure of the FADEC in command the remaining FADEC will assume command, however, the target information will then be coming from the FADEC in command as well as the actual N_1 data. To alert the crew of this fact the target symbol will change from cyan to amber.

When the throttle lever is placed in cutoff, the cutoff information is transmitted by a microswitch to the FADEC, which commands the engine to be shut down. Above cutoff, and increasing from idle, the throttle resolvers signal the FADECs to vary the thrust linearly until reaching a series of three detents. The first detent is labeled CRU and will, in normal FADEC mode, command the normal maximum cruise thrust. The second detent is labeled CLB and will command the normal maximum climb thrust. The third detent is labeled TO/MCT and will command the normal takeoff thrust which is also maximum continuous thrust. Pushing the throttle levers beyond the TO/MTO detent will still command the normal takeoff/maximum continuous thrust. The commanded mode, CRU, CLB, or TO, will be annunciated by the FADEC mode indicator adjacent to the command N_1 box in the EICAS N_1 display.

ENGINE CONTROL SYSTEM LOGIC DIAGRAM

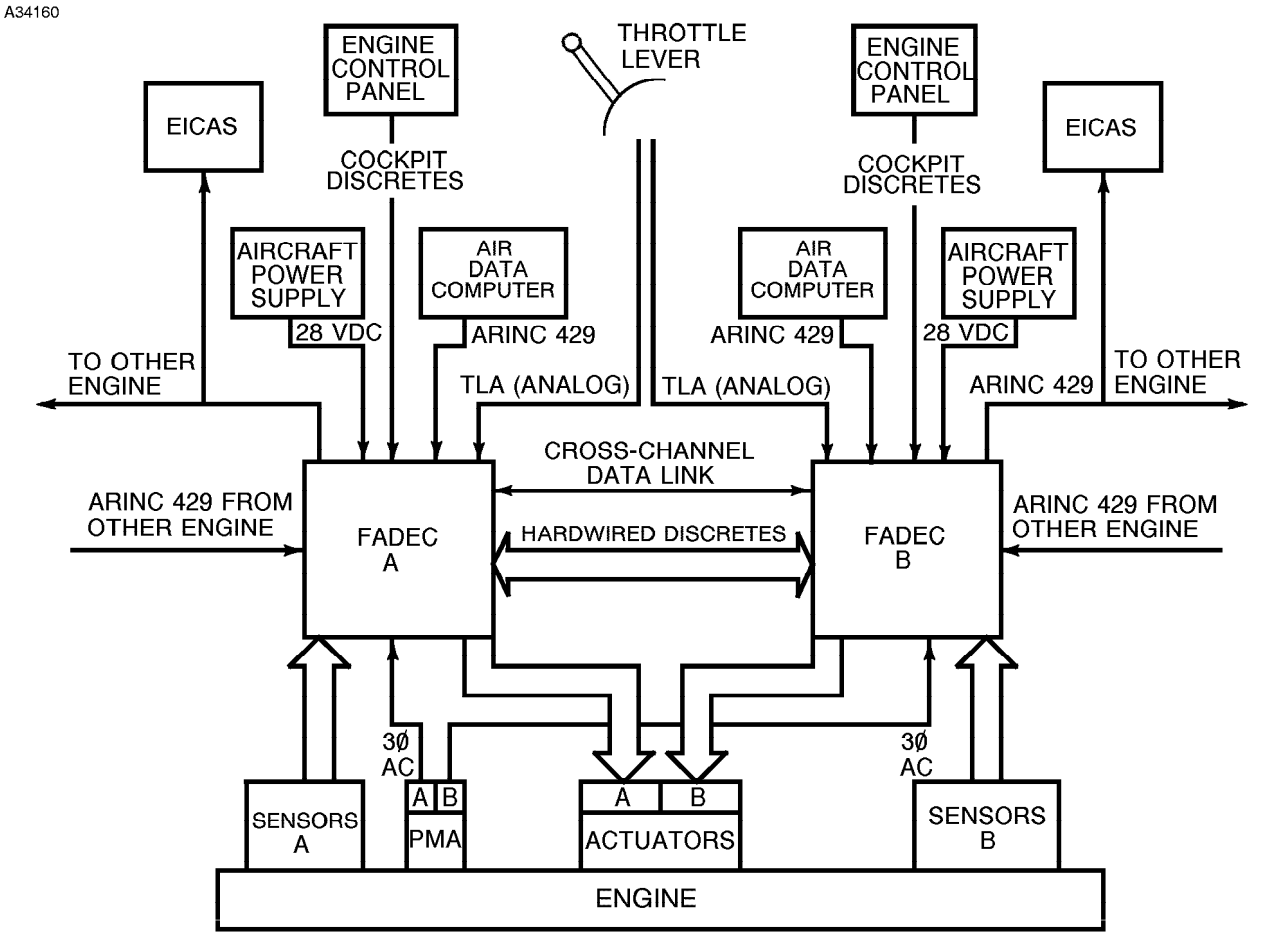

TLA = THROTTLE LEVER ANGLE
ARINC 429 = AERONAUTICAL RADIO INCORPORATED 429 DIGITAL DATA BUS
PMA = PERMANENT MAGNET ALTERNATOR

6785T6001

Figure 2-2

FADEC INPUT/OUTPUT

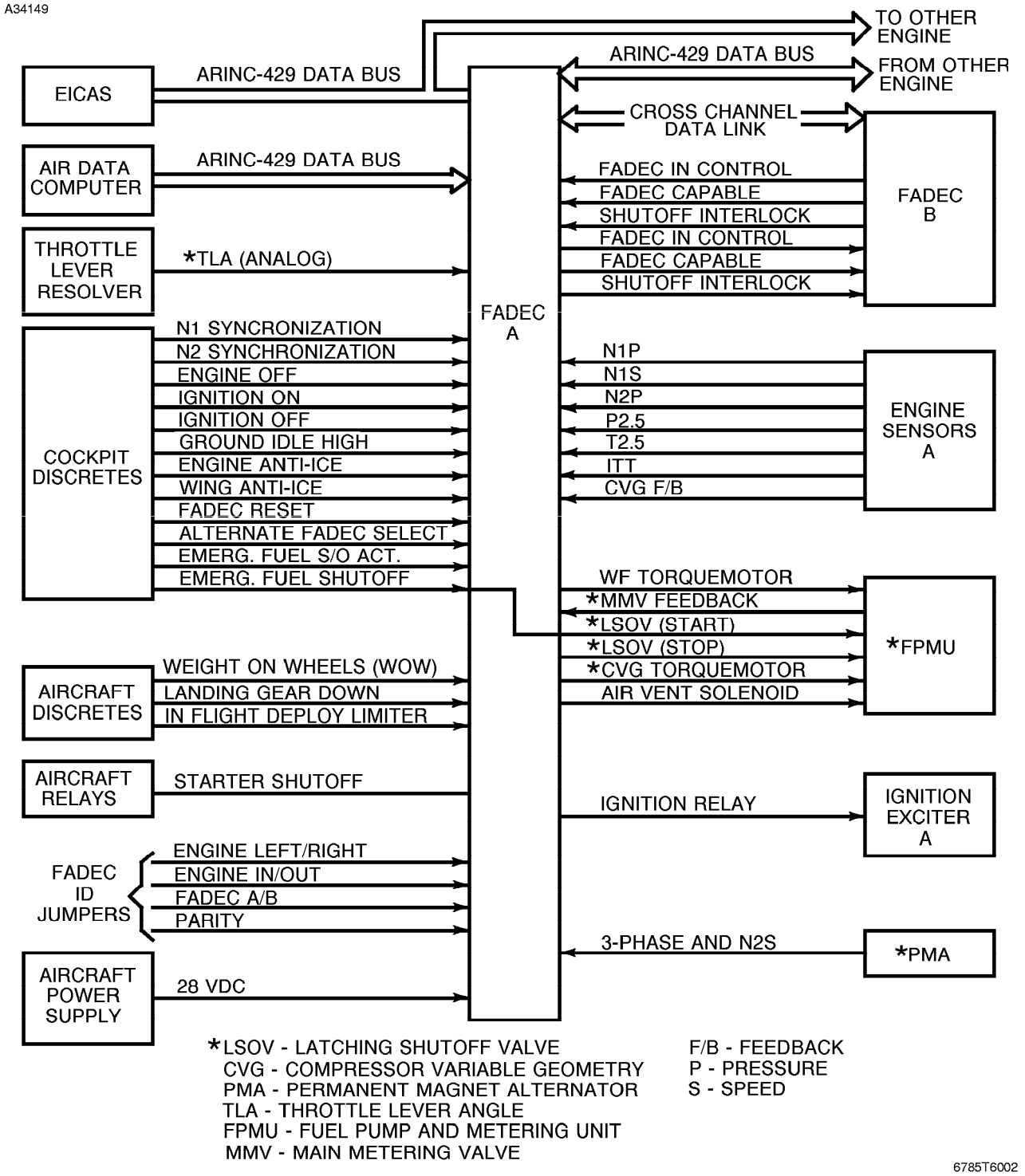

Figure 2-3

In flight, when a throttle is in detent, the command N_1 display from the FADEC not-in-command will show the command thrust for that detent. In flight, with landing gear up, and the throttle levers not in a detent, the command N_1 display will be the next higher detent. On the ground, or in flight with landing gear down, the command N_1 display will be takeoff and the FADEC mode indication TO will be in white unless the throttle levers are in the TO/MCT detent, in which case the TO will be green. All other times the FADEC mode indication will be green.

The FADECs have two reversionary modes, ADC and N_1. If data from both air data computers is invalid, the FADECs will use engine internal (compressor inlet) pressure and temperature to schedule thrust N_1. This mode will be annunciated by the FADEC REV ADC amber CAS message. In the ADC reversionary mode, thrust computation is accurate within the takeoff altitude/temperature envelope and the engine will produce at least takeoff thrust. At higher altitudes maximum thrust will be reduced. The FADEC normally schedules thrust as a function of N_1. If all N_1 signals to the FADEC are lost, the FADEC will schedule N_2 to achieve a target N_1 based on a normal engine N_1 versus N_2 curve. This mode will be annunciated by a FADEC REV N_1 amber CAS message. The N_1 reversionary mode commands relatively accurate thrust, but does not guarantee takeoff thrust at all extremes of the takeoff envelope. It does not result in as large a thrust loss at altitude. N_1 indication is not available in N_1 reversionary mode.

NOTE

Avoid rapid throttle movements if operating in the N_1 reversionary mode.

A third reversionary mode is used when a significant change occurs in the N_1/N_2 relationship, such as could happen because of fan damage due to a large bird. This mode is annunciated by an amber FAN DAMAGE message. As in N_1 reversionary mode, the FADEC sets thrust derived from the normal engine N_1/N_2 relationship, resulting in an N_1 increase which gains some of the thrust lost due to fan damage. In this case EICAS display of N_1 is available.

CAUTION

IF ENGINE DAMAGE HAS OCCURRED, THE FLIGHT SHOULD NOT BE CONTINUED. LAND AS SOON AS PRACTICAL.

The FADECs also provide engine monitoring and will not allow engine ITT (907°C) limits to be exceeded. They will provide automatic engine shutdown if N_1 or N_2 limits are significantly exceeded due to a failure, but will normally not allow N_1 to exceed the N_1 command.

ENGINE SYNCHRONIZATION

Engine synchronization is enabled by the ENGINE SYNC FAN/OFF/TURBINE rotary switch, if the following conditions exist:

- Engine operating modes and bleed air settings of the two engines agree.
- Selected air data computer (ADC) channels agree.
- Left and right throttle lever angles (TLA) are within three degrees of each other.

FAN mode will synchronize both engines to the average of the two commanded fan speeds. TURBINE mode will synchronize the higher RPM engine to the lower engine N_2 RPM. When FAN or TURBINE SYNC is on, a SYNC message is displayed above the target N_1 in the EICAS display. Engine synchronization will automatically be shut off if an engine fails or the throttle lever split exceeds four degrees.

NOTE

Turbine synchronization is only to be selected during climb, cruise, or descent, however, the FADEC will not disable SYNC on the ground or during takeoff or approach.

FUEL PUMP AND METERING UNIT (FPMU)

The fuel pump and metering unit is a fully integrated fuel handling package which incorporates the engine fuel pumping, filtering, and metering functions into a single line replaceable unit (LRU). The fuel pumping and metering unit requires no external adjustments when replaced or when different fuels are used. The unit operates in conjunction with the dual FADECs to provide control of fuel flow to the engines and control of compressor variable geometry (CVG) vanes.

FUEL PUMP AND FILTER

The fuel pump unit consists of a single-stage centrifugal pump followed by a high pressure, positive displacement gear pump. Both pumping elements are driven by a common shaft from a pad on the engine accessory gearbox.

Fuel is pumped by the centrifugal element through an external fuel cooled oil cooler (FCOC) to the main fuel filter, which is a part of the FPMU assembly. The FCOC provides for preheating ice accumulation that would otherwise block the filter. The filter protects the gear pump, metering unit, and fuel nozzles from the effects of contaminants in the fuel. Both impending and actual bypass indicators are incorporated. A full flow bypass valve allows continued operation in the event of a complete filter blockage.

The high pressure gear pump supplies fuel to the main metering valve and CVG control valve. A full-flow relief valve across the gear pump provides protection against an overpressure condition within the engine fuel system. An air vent system at the discharge of the gear pump provides automatic venting of entrapped air or fuel vapor.

The fuel metering and compressor variable geometry (CVG) system encompasses the fuel metering, fuel shutoff, and CVG control functions. The fuel metering system controls the position of the main metering valve plunger while maintaining a constant pressure drop across the main metering valve.

The servo operated main metering valve is biased towards the closed position. During engine operation, in the absence of a signal from the FADEC in control, the valve will slew closed, shutting off fuel flow to the engine. This feature provides an independent, redundant fuel shutoff means within the FPMU.

The FPMU incorporates a two-position magnetically latching fuel shutoff valve which is controlled by two dual coil torquemotors, - START and STOP. The START torquemotor causes the shutoff valve to latch into the open position when energized by the FADEC; the STOP torquemotor will cause the shutoff valve to latch in the closed position. One winding of each of the START and STOP torquemotors is connected to each FADEC, providing redundant shutoff capabilities.

Control of the compressor variable geometry system (CVG) is provided by a dual-coil torquemotor and a servo powered spool valve. Each coil of the torquemotor is controlled by one of the two FADECs. The torquemeter, which is attached to a flexible jet pipe, directs high pressure fuel to one of a pair of receiver orifices. Pressures developed in these orifices are fed respectively to both ends of the CVG four-way orifices. Pressures developed in these orifices are fed respectively to both ends of the CVG four-way spool valve and act as servo pressures to actuate this valve. The spool valve in turn ports high pressure (gear pump discharge) fuel to one side of the piston while venting the other side of the piston to low pressure (gear pump inlet) fuel. The differential pressure provides the power for the actuator to move the compressor variable vanes for optimum airflow.

FUEL MANIFOLDS AND NOZZLES

The fuel manifold system consists of a fuel supply manifold and a separate fuel drain manifold. Fuel flows to fuel nozzles via the fuel manifold. The fuel nozzle connection to the supply line is enclosed with a sealing collar to trap any leaks. The collars are connected to the fuel drain manifold.

The fuel nozzles supply atomized fuel to the combustors at the proper spray angle and pattern for the varying airflow conditions. There are 16 fuel nozzles mounted on studs on the diffuser. Each nozzle shroud slip fits into a combustor swirler ferrule at the front end of the combustor.

ADDITIONAL FUEL SYSTEM COMPONENTS

Additional fuel system components are the associated fuel lines, drains, and the pressure drop spill valve (PDSV) and the pressure raising valve (PRV). The PDSV maintains a constant pressure drop across the main metering valve by recirculating excess fuel back to the gear pump inlet. The PRV generates adequate system pressures for proper functioning of the metering valve and pressure drop servos, and generates sufficient force to operate the compressor variable geometry hydraulic actuator (CVG).

ENGINE ELECTRICAL SYSTEM

Each engine has a permanent magnet alternator (PMA) which is driven by the engine accessory gearbox. The PMA provides primary electrical power for the engine control and ignition system. On engine start, aircraft 28 volt DC power is used to power the FADECs until the PMAs get up to adequate speed to generate sufficient electrical power. The ignition relay is powered by the PMA but is designed to fail safe, (i.e., it is normally closed, or energized open) so that on engine start or in the event of loss of aircraft power the ignition is automatically turned on. The PMA is the only source of power for the ignition exciters.

The permanent magnet alternators (PMA) have four separate electrical windings. There are two three-phase windings and two single-phase windings. Each three-phase winding provides power to one of the engine FADECs. The single-phase windings provide electrical power to the redundant ignition systems. One of the three phases to each FADEC is used to derive a secondary speed signal for the high pressure (HP) rotor shaft. The PMA provides sufficient power to drive the ignition system at all speeds above 10 percent HP rotor shaft speed, and powers the FADECs at a minimum of 50 percent HP rotor shaft speed.

IGNITION SYSTEM

The ignition system is dual-redundant and self-contained. Each half of the ignition system consists of an igniter, a high tension igniter lead, and an exciter. Each exciter is controlled by a separate FADEC and is powered by a separate electrical winding of the permanent magnet alternator (PMA). Airplane electrical power is not used as a backup for the ignition exciter. The ignition systems are alternated, during normal operation; each system provides ignition for every other start.

FADEC controls the ignition system for automatic engine starting and auto-relight. Continuous ignition operation can be manually selected from the cockpit, through a switch connected to the FADEC. The ignition system can also be disabled manually via a cockpit switch. In the case of manual selection, the automatic control of igniters for starting and relight are disabled.

The ignition exciters are of a high-energy, high-tension, continuous duty, capacitance discharge type; they store power and discharge 4 to 7 times per second. They are controlled by the FADECs and receive power from one of the single-windings of the permanent magnet alternator. Each exciter contains a relay that is energized or de-energized by the FADEC.

The igniters, located on opposite sides of the engine, are recessed electrode type and protrude into the combustor.

In case of loss of airplane 28 volt DC power or in the event of failure of the FADEC, the ignition is designed to fail safe (ignition on).

ANTI-ICING SYSTEM

Hot air from low pressure bleed air in flight, and from high pressure bleed air on the ground, is used to keep the engine intakes ice free.

INDICATING SYSTEM

Indicating system components, providing cockpit indications, include the interstage turbine temperature (ITT) thermocouples (sensors), fan and low pressure turbine speed (N_1) sensors, the high pressure compressor and turbine (N_2) sensors, and the compressor inlet pressure ($P_{2.5}$) sensor. Two vibration sensors comprise part of the integrated engine instrument system. A cockpit CAS indication is also provided for the electronic magnetic chip detectors.

INTERSTAGE TURBINE TEMPERATURE (ITT) SENSORS

Sixteen thermocouples are mounted around the center part of the low pressure turbine case near the rear of the compressor diffuser. The system includes two harnesses (eight thermocouples on each harness) and an ITT trim plug for each harness. The thermocouples measure the temperature of the gas entering the turbine section from the compressor diffuser and transmit that information through the ITT harness to the EICAS (engine instrument and crew alerting system) and the standby engine instruments in the cockpit. The ITT trim plug receives the signal and adjusts it before passing it on to the engine FADEC (full authority digital engine control).

LOW PRESSURE (N_1) AND HIGH PRESSURE (N_2) SENSORS

Two dual element N_1 sensors are mounted on the front frame of each engine. Each N_1 sensor has a magnetic coil that monitors the speed of the fan and sends the value to the EICAS and standby engine instrumentation on the cockpit. Since the fan and the low pressure compressor (N_1) are mechanically connected, fan speed is equal to N_1 speed.

Two N_2 sensors are mounted on the bottom left side of the accessory-drive gear box of each engine. The sensors have magnetic coils that monitor the speed of the alternator gearshaft in the gearbox. The gearshaft is driven by the high pressure compressor rotor, so when the gearshaft speed is known the system can calculate the speed of the compressor rotor. The N_2 sensors also have a backup power source from the permanent magnet alternators (PMAs) on each engine.

STANDBY ENGINE INSTRUMENT INDICATOR

The standby engine instrument indicator is located high and slightly to the right on the center instrument panel. It provides a necessary minimum of information to enable the crew to efficiently operate the engines. The standby indicator will be available if the EICAS (engine indicating and crew alerting system) should fail. Information displayed is N_1 (fan speed) in percent RPM, N_2 (high pressure turbine speed) in percent RPM, and ITT (interturbine temperature) in degrees Celsius.

On initial power up, the standby engine instrument indicator will display all eights and will flash the digits for approximately three seconds, indicating that the built in test is completed and that the system is operational.

The signal for the standby instrument indicator is transmitted in the form of serial data on the ARINC-429 bus which is used by the EICAS system. The standby engine instrument indicator is a redundant system in that if one FADEC should become unreliable or invalid, the second FADEC on the applicable engine will provide the data on the common serial bus and to the indicator.

MAGNETIC INDICATOR PLUG AND MAGNETIC DRAIN PLUG

A magnetic indicator plug capable of attracting magnetically permeable materials is provided on the static air/oil separator which is mounted inside the tank at the bottom of the engine oil tank. The oil tank also has a magnetic drain plug.

MAGNETIC CHIP COLLECTORS

Each of the engine sump inlets to the scavenge pump includes a removable magnetic chip collector and screen. The magnets prevent damage by collecting particles before they enter the scavenge pump elements, thereby preventing damage and aiding in fault detection.

ENGINE INSTRUMENT AND CREW ALERTING SYSTEM (EICAS)

The engine instrument and crew alerting system (EICAS) is the medium by which engine operating information is imparted to the crew. Engine information is only one of the several possible selections which may be made on the center display unit (DU). If additional engine information is desired the button below the ENG identification on the display is pressed; engine information will then be presented in the crew alerting system (CAS) section of the display.

At all times, on the center display unit (DU), normal engine status information of engine fan and turbine speed, inter-turbine temperature, oil pressure and temperature, and fuel status is displayed. Abnormal or emergency engine information will appear in the crew alerting system (CAS) window of the EICAS DU any time the EICAS system senses an abnormal or emergency condition. If the message is a warning message (red) the same message will also be presented on the multifunction display tubes (MFD) until it is acknowledged. The MASTER CAUTION or the MASTER WARNING, as applicable, will also be illuminated. The MASTER CAUTION will be in a steady mode and the MASTER WARNING in a flashing mode. A tone (chime or double chime) will also be heard, depending upon the type of installation.

The Engine Instrument and Crew Alerting System, since it is an electronic system which is more closely associated with avionics systems, is covered in detail in Section Three, Instrumentation and Avionics.

ENGINE OIL SYSTEM

The lubrication system is a self-contained, pressure regulated and recirculating dry sump system. The system provides filtered pressurized oil to the engine oil coolers, engine sumps, and the accessory gearbox to cool and lubricate the bearings, seals, and gear meshes.

The engine oil supply is contained in the engine-mounted oil tank. The tank, which has a thirteen quart capacity, is equipped with an oil level sight gage and an oil level/low oil warning sensor which is connected to the EICAS system. The low level warning system is triggered when there are three quarts or less in the tank.

The oil is pumped from the tank through a filter and is then cooled by the air-cooled oil cooler (ACOC) and the fuel-cooled oil cooler (FCOC). Oil to the accessory gearbox is distributed through cast passages to the various meshes and bearings in the accessory gearbox. Pressurized oil to the front frame is divided inside the front frame and routed to the fan sump, forward sump, and an external core tube which delivers oil to the diffuser assembly and the rear turbine bearing support for the center and aft sumps.

The lube and scavenge pumps are an integral unit mounted at the rear, lower right pad of the accessory gearbox. The gerotor type pump includes a series of gerotor elements, one pressure and five scavenge, all arranged in series on a common drive shaft. A pressure regulating valve in the oil pump housing maintains a 56 PSI pressure differential between the center sump supply pressure and the center sump scavenge pressures.

The filter unit, which is mounted on the outer bypass duct, includes a replaceable three-micron filter element, visual and electrical impending bypass indicators, and visual actual bypass indicator. A bypass valve opens at a pressure differential across the filter of 28 to 32 PSID, which allows oil to bypass the filter when the filter becomes contaminated or during cold starts. The visual and electrical impending bypass indicators activate when the pressure differential across the filter is from 19 to 25 PSID.

ENGINE OIL SYSTEM SCHEMATIC

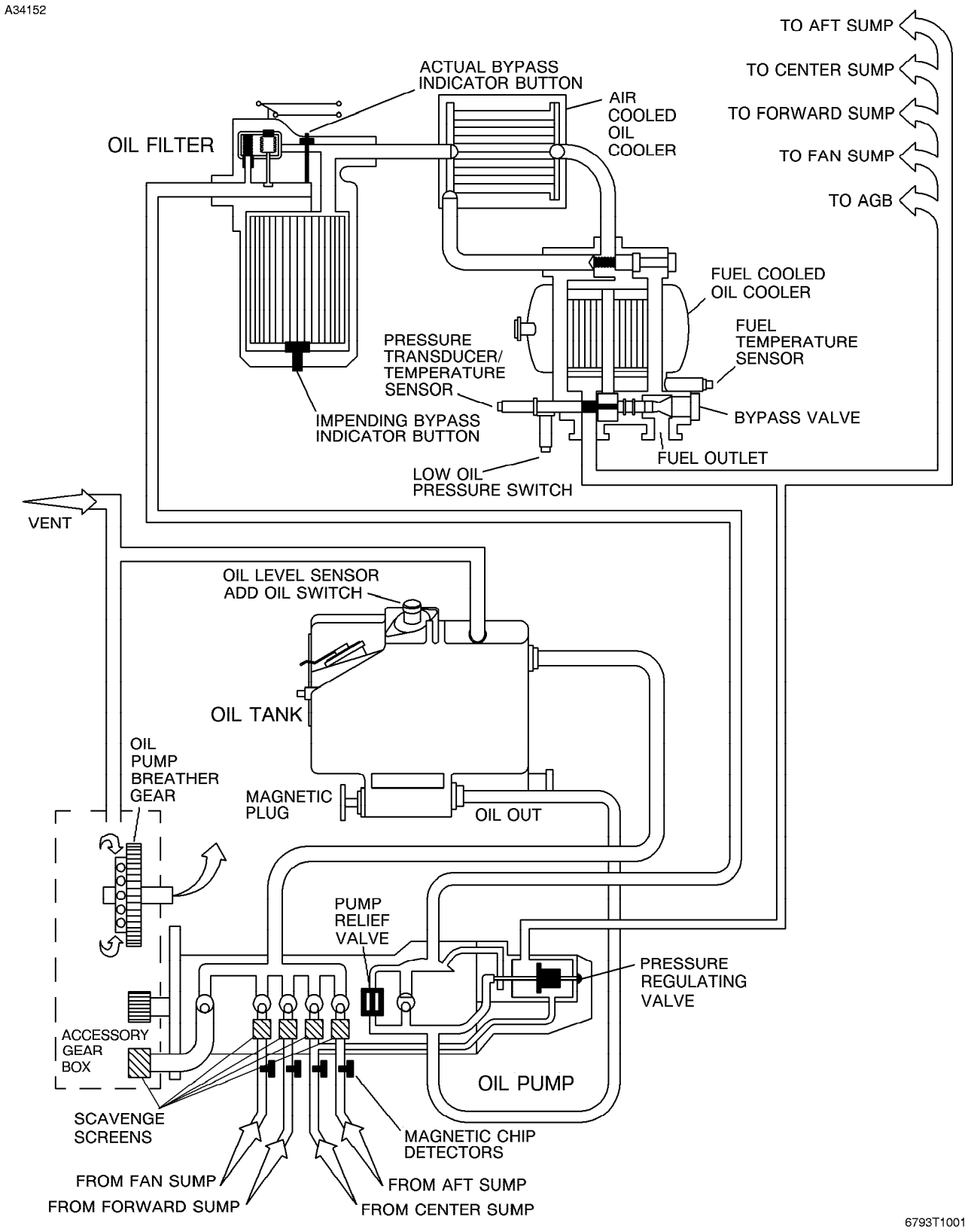

Figure 2-4

AIR-COOLED OIL COOLER (ACOC)

The air-cooled oil cooler is located in the bypass flow on the inside wall of the outer bypass duct at the bottom of the engine. The surface-type heat exchanger has a single plate-fin oil section. A thermal/pressure bypass valve located in the fuel-cooled oil cooler allows cold oil to bypass the ACOC. The bypass valve will also open to ensure flow to the engine if the oil cooler plugs.

FUEL-COOLED OIL COOLER (FCOC)

The fuel-cooled oil cooler is mounted to the outer bypass duct on the bottom of the engine. It simultaneously cools the engine lubricating oil and warms the fuel upstream of the fuel pump and metering unit (FPMU) filter. A thermal/pressure bypass valve senses the temperature of fuel leaving the FCOC and bypasses oil internal to the cooler to prevent heating of the fuel above a predetermined point. The bypass valve will also open to prevent clogging of the cooler or for cold starts.

COMPONENTS AND ACCESSORIES

Various engine components and accessories are mounted on the fan stator and air inlet housing, the bypass duct and rear mount ring, and the accessory drive gearbox.

GROUND IDLE

A GND IDLE switch on the left side of the pedestal near the throttles has NORM and HIGH positions. In NORM, engine idle power is reduced when the throttles are in idle during ground operation. During landing, with throttles in idle, the reduction of power is delayed for approximately eight seconds after touchdown, to provide for a touch-and-go or go-around. This reduced power feature is designed to relieve braking requirements during landing run and taxiing. Appearance of a GROUND IDLE L - R EICAS annunciation indicates that the applicable full authority digital engine control (FADEC) has commanded ground idle in flight. This malfunction can be corrected by placing the GND IDLE HIGH/NORM switch to HIGH. Except for a malfunction correction, HIGH position is only selected during touch-and-go landings.

DIRECTIONAL REFERENCES

Directional references to front and rear, right and left, top and bottom and clockwise and counterclockwise are made facing the exhaust cone with the engine in a horizontal position and the accessory drive gearbox downward. Direction of rotation of both the fan and low pressure compressor and the high pressure spool is counterclockwise.

ENGINE COMPONENTS AND ACCESSORIES

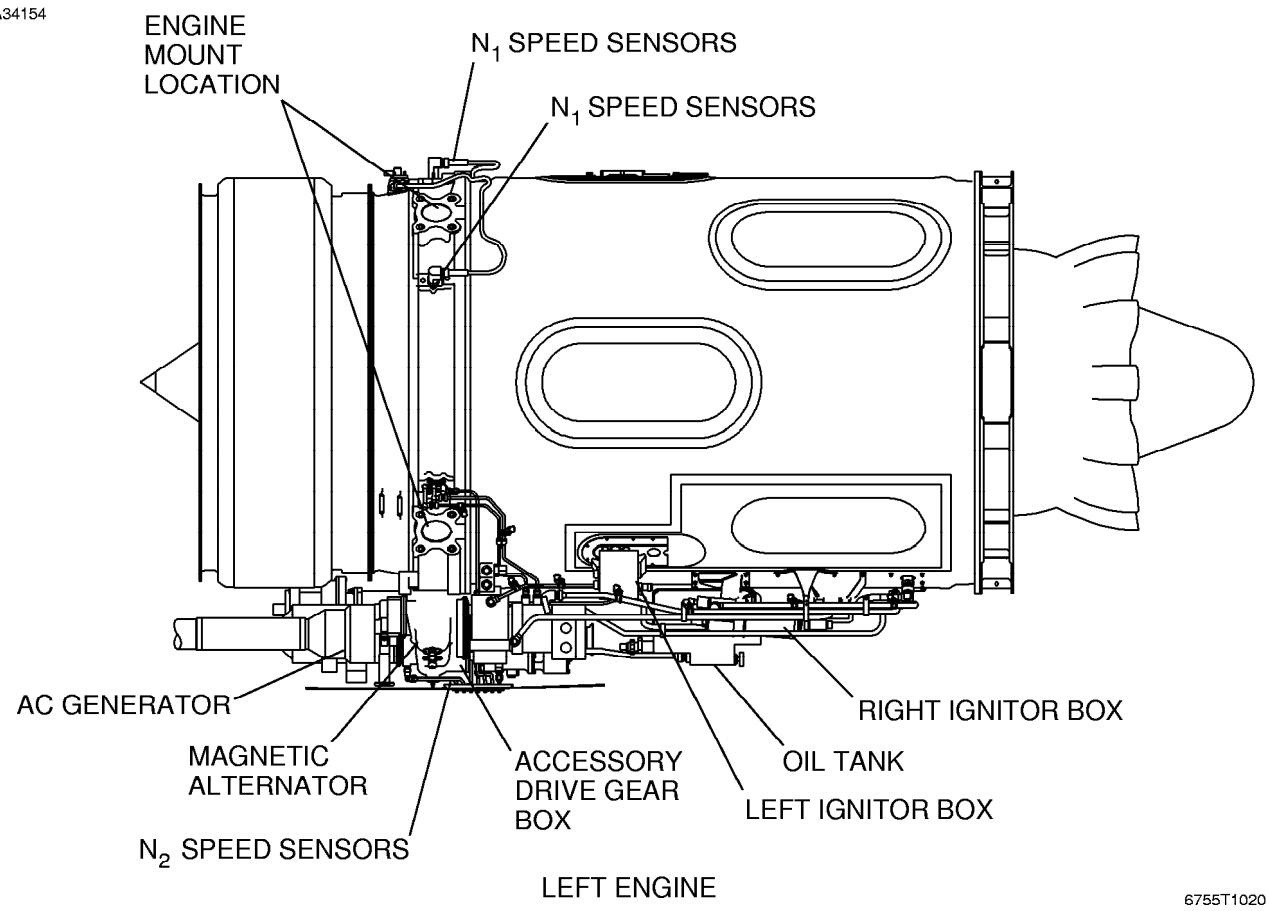

Figure 2-5 (Sheet 1)

ENGINE COMPONENTS AND ACCESSORIES

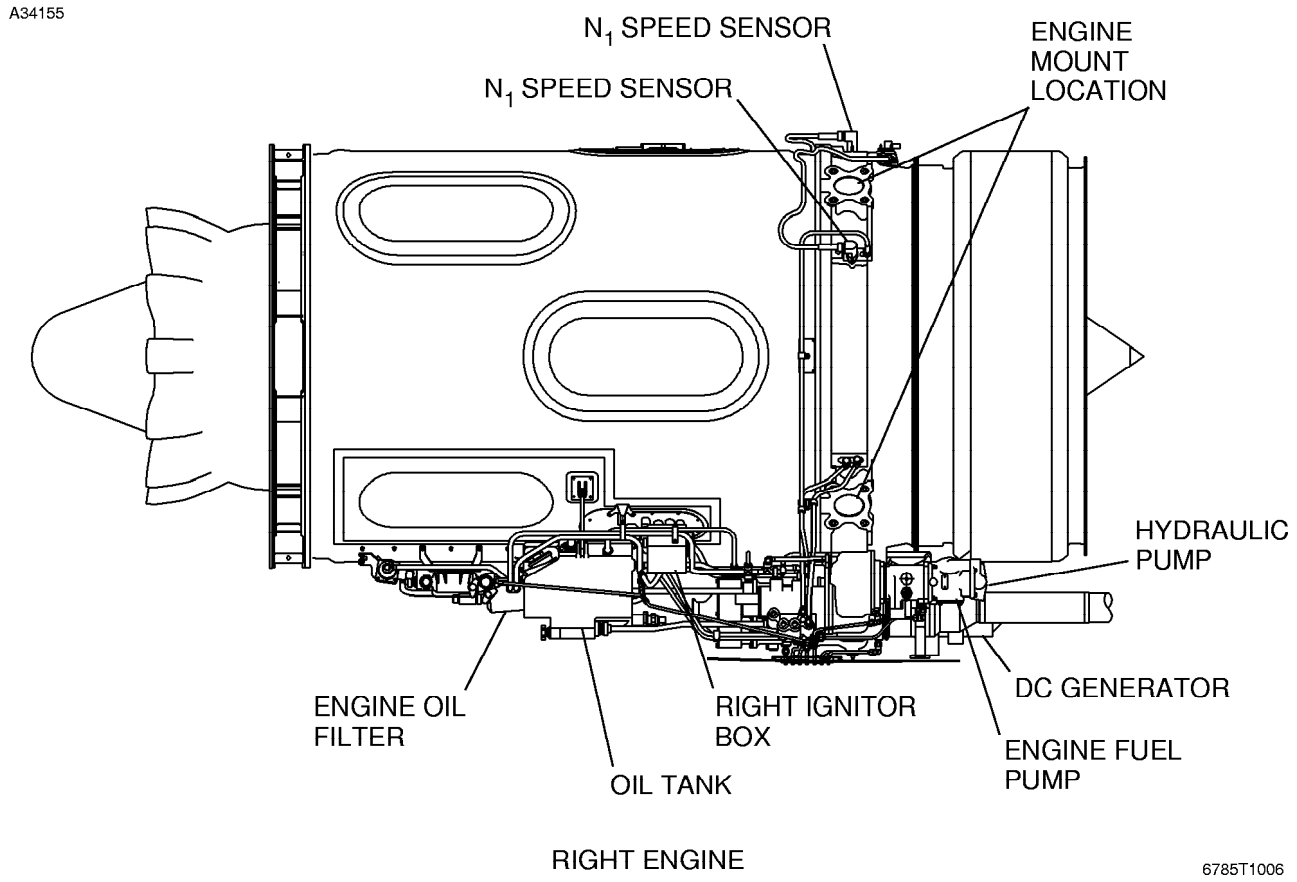

Figure 2-5 (Sheet 2)

THRUST REVERSER SYSTEM

DESCRIPTION AND OPERATION

The thrust reversers are of the external target type employing two vertically oriented doors or buckets, which, when deployed, direct exhaust gases forward to provide a deceleration force for ground braking. When stowed, the reversers fair into external airplane contours to form the aft portion of the nacelle. The thrust reverser doors are attached to the thrust reverser body, which bolts to the aft end of the engine case. The faired reverser doors seal sufficiently to control and direct the escape of the high pressure exhaust gasses.

NORMAL OPERATION

The reverser system is designed for two-position operation: stowed during takeoff and flight and deployed during landing ground roll. The reversers are activated by pilot operation of the thrust reverser levers and are deployed by hydraulic pressure supplied by engine-driven pumps and directed to the drive actuators through the electrically operated thrust reverser control valves. The reversers each use two hydraulic actuators connected by pushrods to the thrust reverser door. The hydraulic actuators are located on the left and right sides of the thrust reverser. The aft end of the thrust reverser door is attached to a fixed hinge. As the hydraulic rams move aft, push rods open the doors to full deployed position. As the hydraulic rams move forward, the pushrods pull the doors into the stowed position.

Control of the individual thrust reverser is through a reverse thrust lever mounted on each of the engine throttles (thrust levers). The reversers can only be deployed, by the reverse thrust levers, when the primary throttle (thrust levers) are in the idle thrust position and the airplane is on the ground, as sensed by either of the main gear squat switches. The reverse thrust levers also control engine thrust during reverse thrust operation.

In the event of an inadvertent thrust reverser deployment, there is an automatic electronic power reduction circuit, activated by the thrust reverser control unit. It will send a signal to the full authority digital engine control (FADEC), which will bring the engine to idle, but the throttle lever position will remain the same. An amber message (or red for a dual occurrence) will appear in the EICAS display (TR AUTOSTOW L or R) and a chime (double chime for both thrust reversers) will sound to indicate that an in flight thrust reverser deployment has occurred. Thrust above idle will not then be possible until the throttle lever is moved to idle. If the automatic feature that restricts the effective TLA to idle during in flight thrust reverser deployment should be disabled or the inflight deploy switch is faulted, an amber EICAS message (ENG TR SW FAULT L or R) will appear and a chime will sound to warn the crew to use extra caution.

When restowing the thrust reversers, the main throttles should not be advanced from idle until the reversers are stowed as indicated by extinguishing of the UNLOCK lights. The thrust reversers should, therefore, not be used on touch-and-go landings and a full stop landing should be made once the thrust reversers are selected.

THRUST REVERSER IN STOWED AND DEPLOYED POSITIONS

A3875

6785P6003

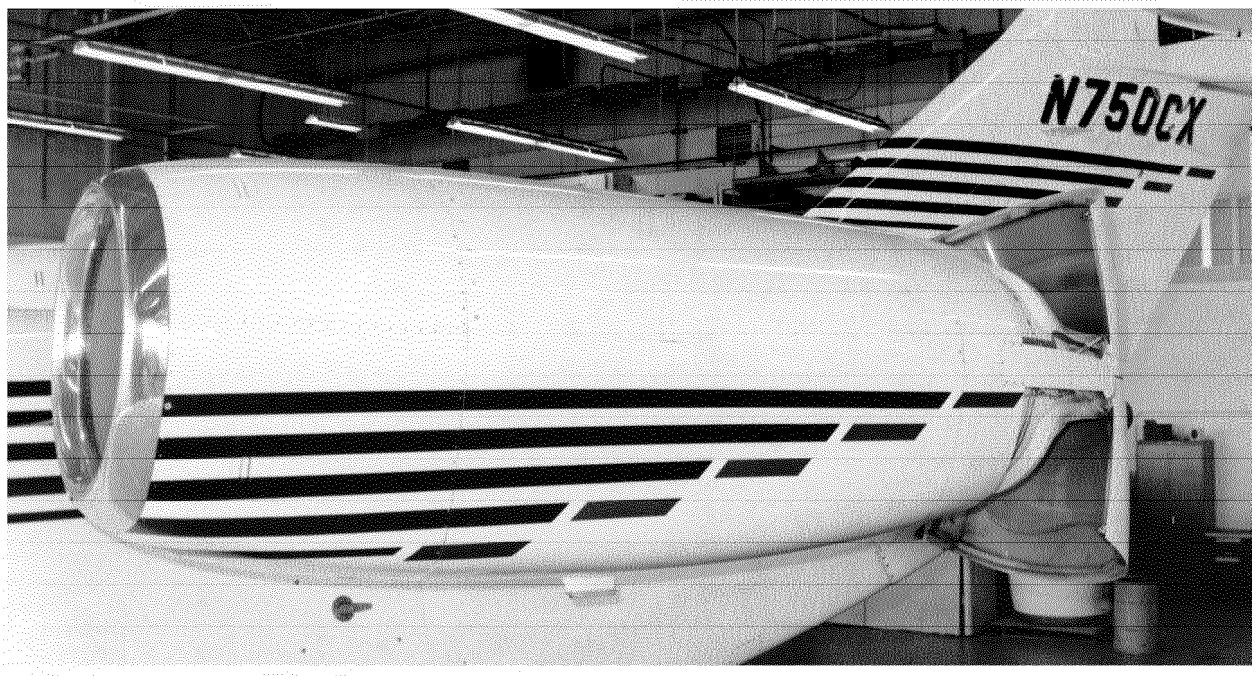

6785P6004

Figure 2-6

THRUST REVERSER SYSTEM HYDRAULIC FLOW DIAGRAM

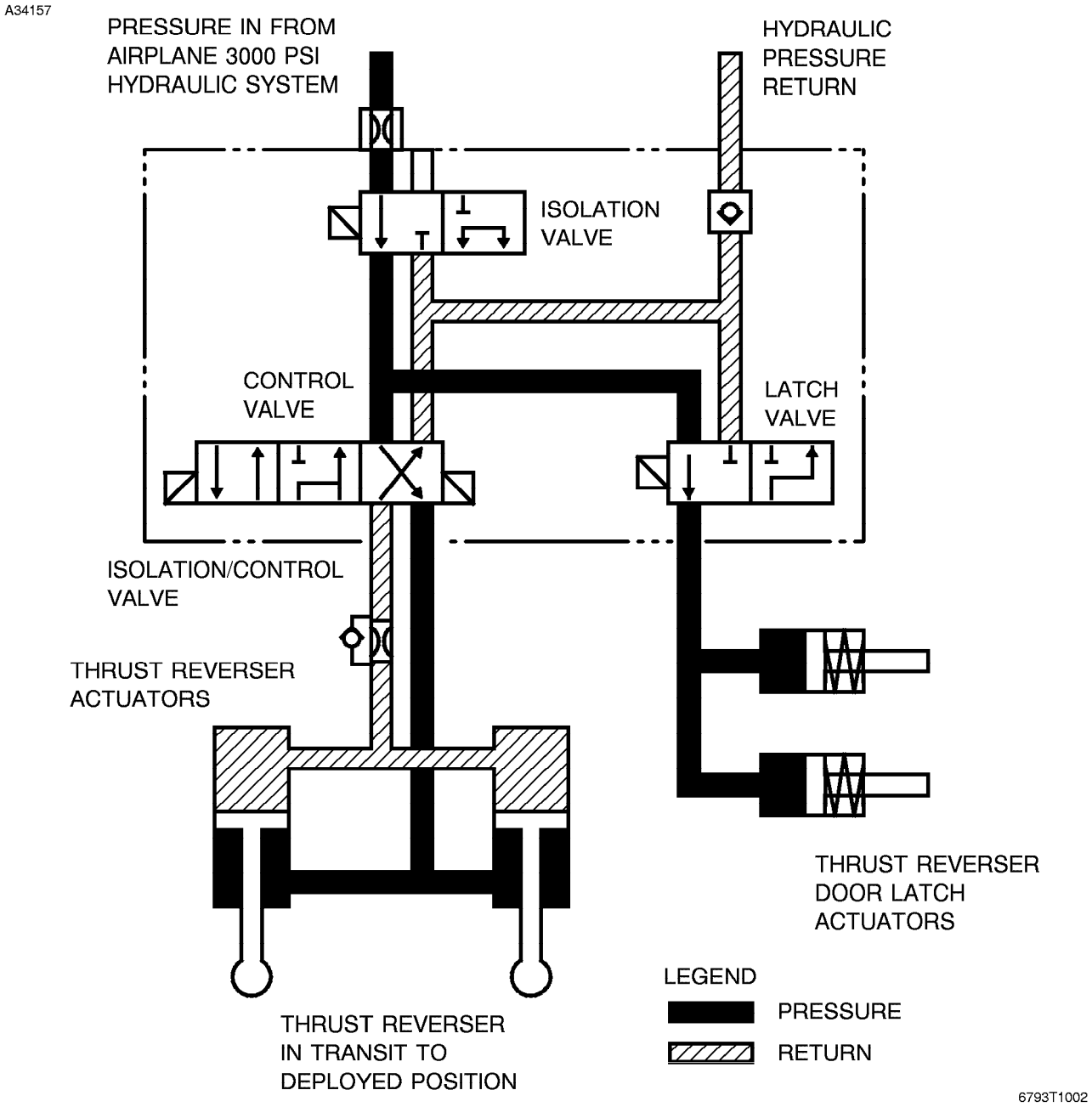

Figure 2-7 (Sheet 1 of 3)

THRUST REVERSER SYSTEM HYDRAULIC FLOW DIAGRAM

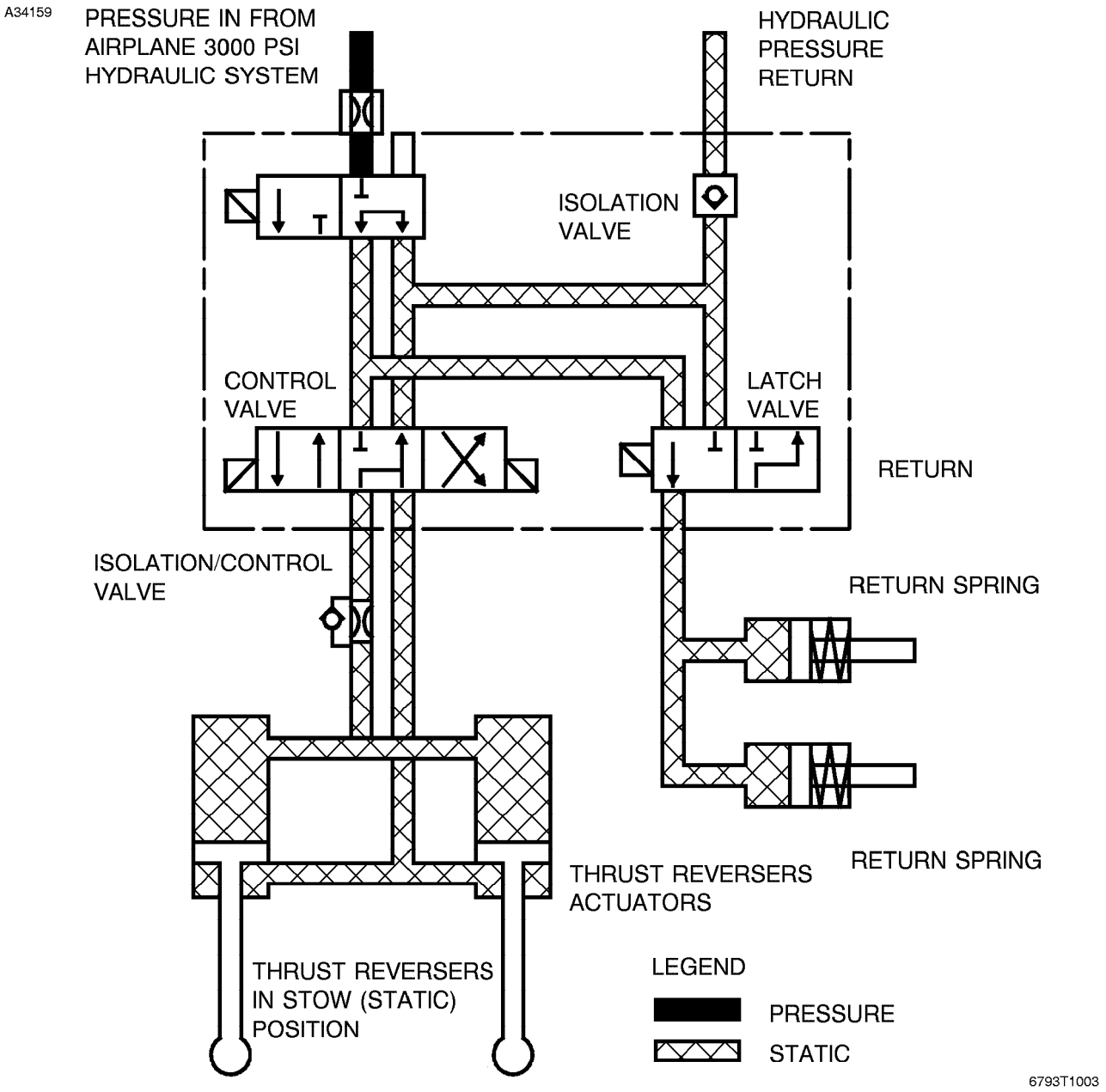

Figure 2-7 (Sheet 2)

THRUST REVERSER SYSTEM HYDRAULIC FLOW DIAGRAM

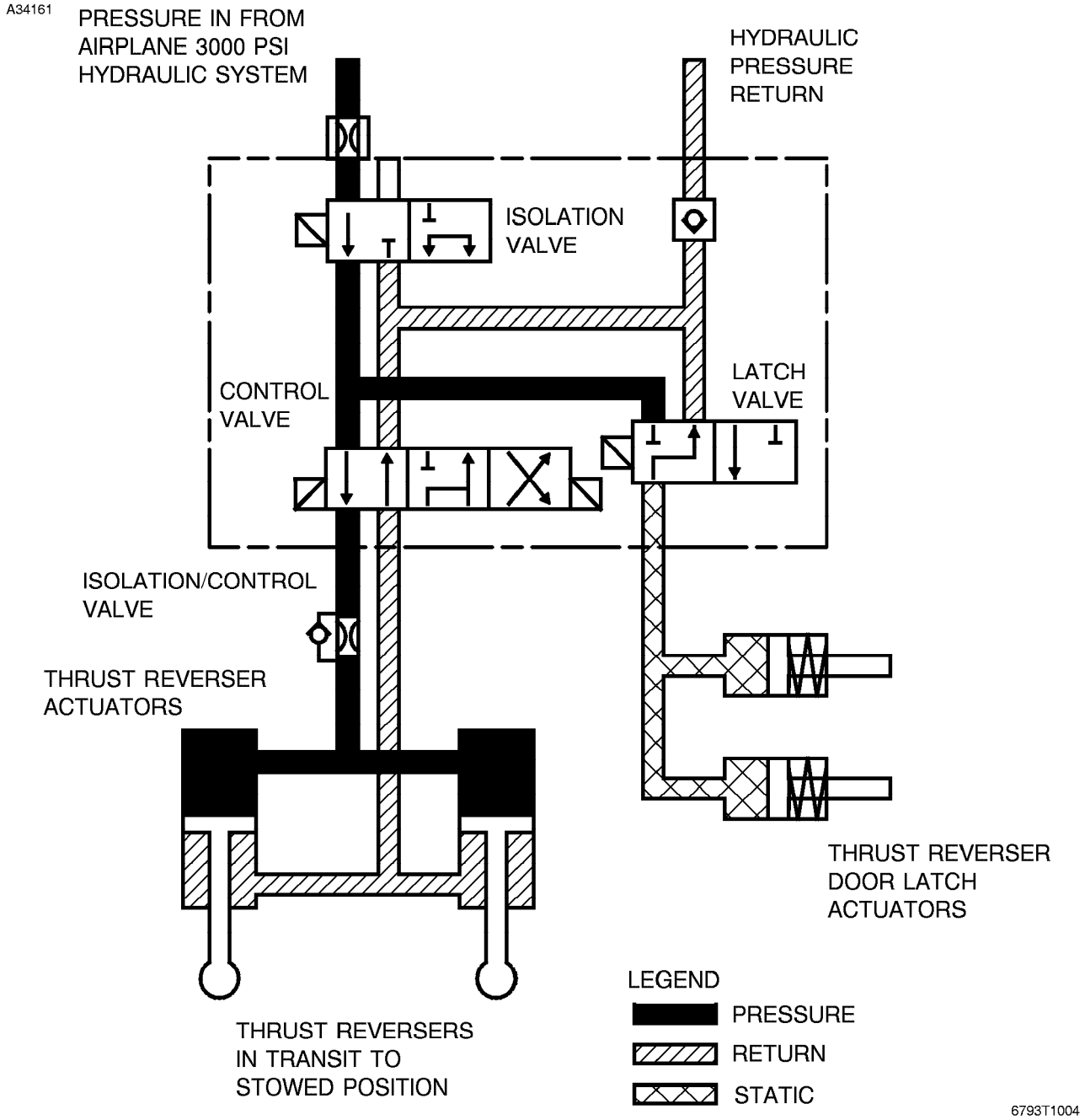

Figure 2-7 (Sheet 3)

Three reverser indicator lights, and a thrust reverser emergency stow switch, for each reverser are mounted on the cockpit glareshield for monitoring reverse functions. The lights are identified: ARM, UNLOCK, and DEPLOY.

THRUST REVERSER THROTTLE LEVERS

A3916

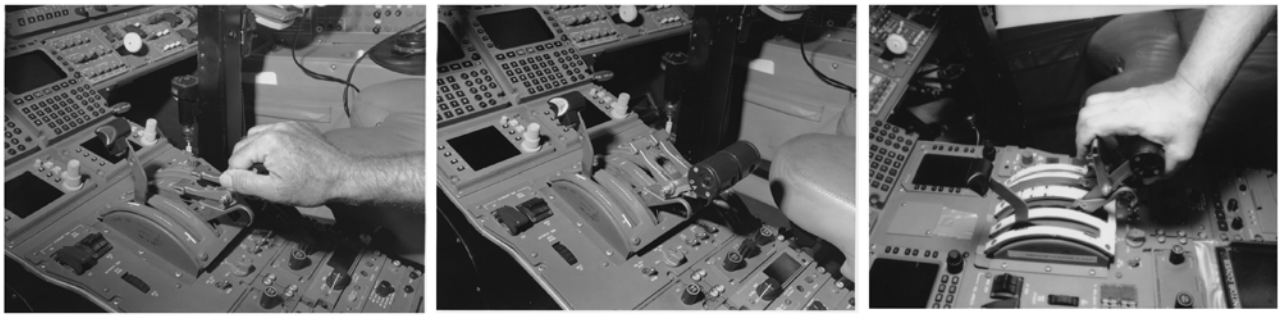

6785P1012
6785P1013
6785P1014

Figure 2-8

THRUST REVERSER STOW SWITCHES AND INDICATOR LIGHTS

A3917

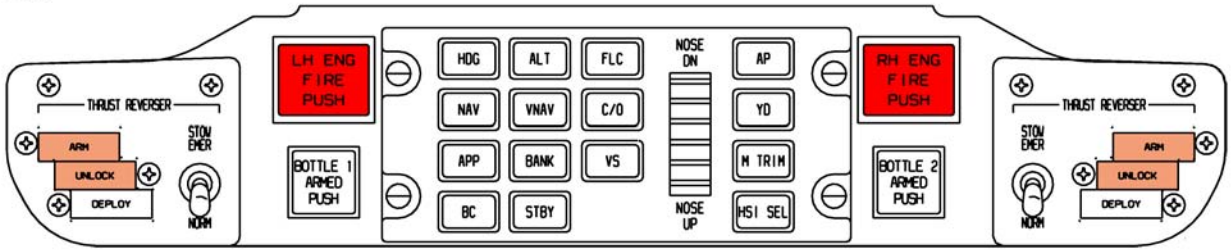

6718C119-2 (2)

Figure 2-9

Moving the reverse thrust lever from the STOWED to the DEPLOY position actuates the deploy cycle. This supplies power through the thrust reverser logic modules to the thrust reverser isolation/control valves, which electrically opens the valves. A pressure switch is located in the isolation/control valve. When hydraulic pressure is sensed immediately downstream of the isolation part of these valves, it causes the amber ARM light in the cockpit to illuminate. The isolation/control valves allow the airplane hydraulic system to pressurize the thrust reverser system, and hydraulic pressure to the reverser actuator causes the actuator ram to retract slightly, drawing the thrust reverser doors into an overstow position that allows the door latches to unlock and release, activating the inboard and outboard latch switches installed on the upper and lower latch boxes (S2, S3, S5, and S6). Any combination of two switches will cause the amber UNLOCK light to illuminate. The remaining travel of the actuators deploys the reverser doors.

In flight, during forward thrust operation, power from the reverser circuit breaker is continuously present at the thrust reverser control stow array, so that an autostow sequence may be initiated in the event any combination of two latch switches move from their fully locked positions.

At full deployment of the reversers, the deploy switch (S7), which is mounted on the outboard primary actuator, is activated, which in turn illuminates the white DEPLOY light and unlocks the pedestal-mounted throttle lockout cam. The purpose of the lockout cam is to prevent increasing engine thrust, once reverser deployment has been selected, until the reversers have fully deployed. Activation of one of the landing gear squat switches (WOW switches) will complete the electrical circuit necessary to initiate deployment of the thrust reversers.

NOTE

- The DEPLOY light illuminates in 1.0 to 1.5 seconds after the hydraulic UNLOCK light illuminates. An erroneous sequencing or a delay in the illumination of the thrust reverser lights indicates a failure in the thrust reverser system. Either or both conditions requires a maintenance check. The thrust reverser should stow in 1.5 seconds.

- Do not attempt to advance the throttles before the UNLOCK light extinguishes and the DEPLOY light illuminates.

Placing the thrust reverser levers in DEPLOY in flight will cause the MASTER WARNING light to blink. The thrust reverser levers should not be placed in the DEPLOY position in flight, since a single failure of either squat switch could, in certain conditions, permit deployment of the thrust reverser(s). During in-flight operation, the amber MASTER WARNING light will alert the crew to the presence of pressure downstream of the hydraulic control valve's isolation valve, or of a combination of any two thrust reverser unlocked signals in flight. The ARM light will also illuminate under these conditions. If a thrust reverser unlock command is sensed by the FADEC (any three of the latch switches move to an unlocked position) it will command the applicable engine to go to idle power, regardless of the throttle lever position. In this case an EICAS message TR AUTOSTOW L/R will appear. If an EICAS message ENG TR SW FAULT L/R should appear it means that the “automatic throttle-to-idle during in-flight thrust reverser deployment” circuit is disabled or that the in-flight deploy switch is faulted.

To ensure actuation of the squat switches and to eliminate any delay in the deployment of the thrust reversers, it is recommended that the spoilers/speed brakes be extended immediately following touchdown.

After deployment, power may be increased by moving the thrust reverser throttle levers aft for maximum reverse thrust. The FADEC system will govern the maximum reverse thrust according to the amount of thrust called for by the reverser lever angle, up to a percentage of takeoff power which is determined by preset stops in the throttle quadrant. This allows the pilot to keep his attention on the landing rollout instead of diverting his attention to the reverser power settings.

Single-engine reversing has been demonstrated during normal landings and is easily controllable. The reverse thrust should be brought to idle by 70 KIAS during single reverser operations on a slippery runway surface or if the nosewheel steering is inoperative.

For an increased aerodynamic drag on landing roll, it is suggested that the thrust reversers remain in the deployed idle reverse power position after reverse thrust power has been terminated at 65 KIAS. Use of reverse thrust power below 65 KIAS is not recommended due to the possibility of foreign object damage caused by ingestion of debris from the runway.

To stow the thrust reversers, move the reverse thrust lever through the idle reverse detent to the stow position. Near the idle reverse detent the lever sends a signal to the deploy valve solenoid which de-energizes it, extinguishing the DEPLOY annunciation, and signals the thrust reverser control unit, via the latch switches, to energize the isolation and stow valve solenoids. Further movement terminates deploy power to the isolation and latch valve solenoids, de-energizing the unlatch valve solenoid; the isolation valve remains energized. De-energization of the deploy valve solenoid and latch valve solenoid opens the primary actuator's deploy sides and the latch actuators to hydraulic return, resulting in their depressurization. The force of the latch actuator's internal return springs, in turn, rotates the latch hooks until they contact the latchboxes' leaf springs short of their locked position, holding the latch switches depressed, and leaving power continuously on the stow valve solenoid through the position of the latch switches. Hydraulic pressure is then directed to the two actuators on the reverser which move the thrust reverser doors to the stowed position. As the thrust reverser doors approach their stowed position, the doors' receptacles engage the latchboxes' leaf springs, deflecting the springs as the doors continue into their overstow positions, and allowing the latch hooks to return to their locked positions. Subsequently, the latch switches relax, terminating power from the thrust reverser control unit to the isolation and stow valve solenoids, and signaling the thrust reverser control unit to extinguish the armed annunciator. The FADEC will then allow thrust to be increased.

The thrust reversers are not to be used during touch-and-go-landings. A full stop landing must be made once reverse thrust has been selected. Less distance is required to stop, even on a slick runway, once the reversers have been deployed, than is required to restow the reversers and takeoff.

EMERGENCY STOW OPERATION

An emergency stow switch for each thrust reverser, located on the cockpit glareshield, will provide the same stow sequence (using the same 28 volt left and right thrust reverser power source stow circuit breakers) in the event of a failure of the pedestal-mounted deploy and stow switch.

The emergency stow function can be checked on the ground by deploying the reversers normally and then actuating each emergency stow switch. The DEPLOY and UNLOCK lights shall extinguish. The ARM lights remain illuminated. Return the thrust reverser lever to stowed position, then turn each emergency stow switch off. All lights will extinguish.

ENGINE FIRE PROTECTION

The engine fire detection system is comprised of a tail cone mounted fire detection control unit, and an engine mounted fire detecting assembly consisting of a sensor tube, an integral sensor element, and a responder unit. Upon detection of an overtemperature condition it illuminates the respective red ENG FIRE warning light on the cockpit glareshield, provides an EICAS message, illuminates the MASTER WARNING LIGHTS and sounds the aural warning (if installed) and/or tone.

FIRE DETECTION INDICATING LIGHTS

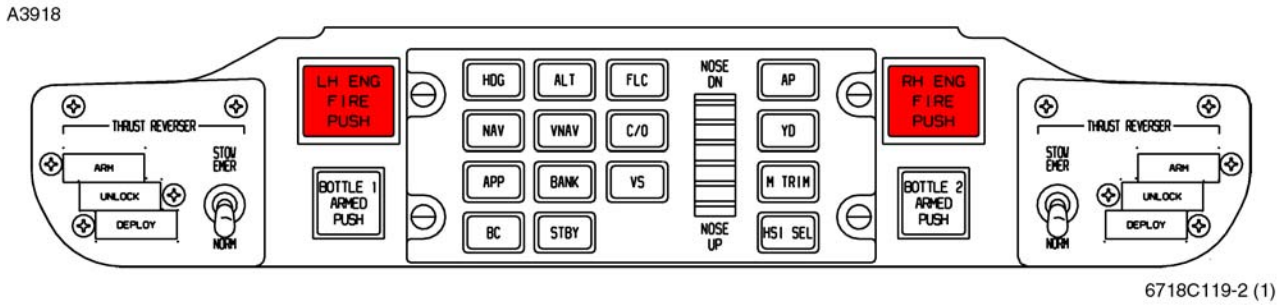

Figure 2-10

The fire warning light, under a transparent, spring-loaded guard, also serves as a firewall shutoff switch. Lifting the guard and depressing the warning light simultaneously closes the respective firewall fuel and hydraulic valves, de-energizes the generator and the thrust reverser isolation valve, and arms the two extinguishing bottles which are charged with CBrF3 (bromotrifluoromethane). System discharge is by means of pyrotechnic devices.

ENGINE FIRE EXTINGUISHING SYSTEM

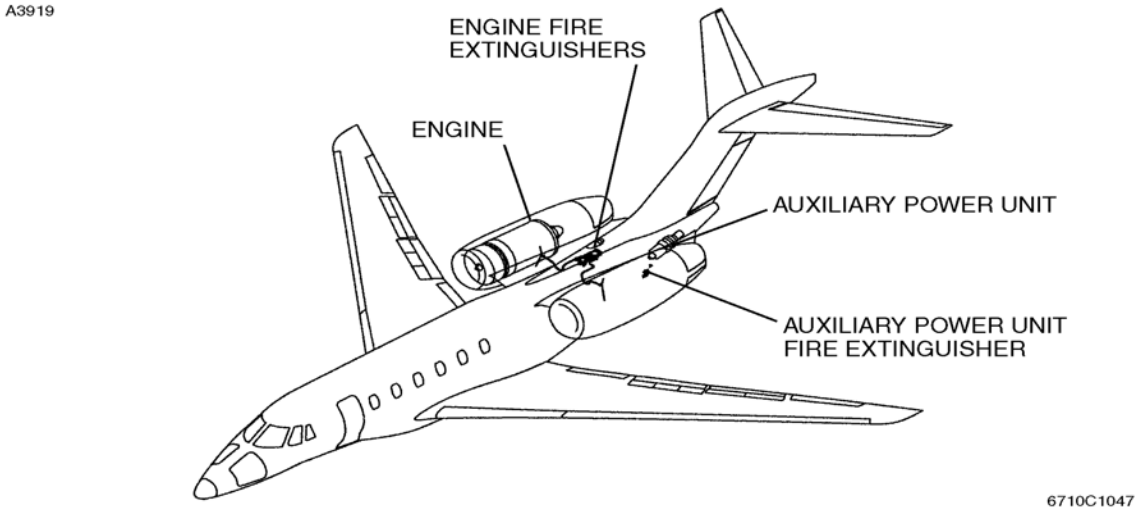

Figure 2-11

Depressing the fire warning light also sends a signal to the FADEC to shut down the respective engine.

Depressing the fire warning light also sends a signal to the FADEC to shut down the respective engine

There is logic built into the system to prevent multiple messages which would appear when an engine is shut down. When a FADEC senses idle cutoff on either engine, the messages (such as FUEL PRESS LOW, HYD PRESS LOW, and GEN OFF) will change to ENGINE SHUTDOWN L - R. This message is less distracting to the crew when an engine is shut down.

Once armed, either bottle may be discharged to the selected engine by pushing the BOTTLE ARMED light. The light will go out as the light is pushed. System plumbing is such that both bottles can be directed to the same engine if necessary. Both bottles will discharge into the nacelle having the fire switch depressed.

Function of the lights and continuity of the sensor and detector control units are checked by placing the rotary TEST selector to the SMOKE FIRE WARN position and observing illumination of both red lights and the MASTER WARN light. Depressing either fire light will then illuminate both BOTTLE ARMED lights. Since the BOTTLE ARMED lights will come on each time the system is tested or initially activated, regardless of extinguishing agent quantity, it is necessary to check proper bottle servicing during preflight inspection. Appearance of a cyan EICAS message FIRE BOTTL LOW L - R indicates that the applicable fire bottle service pressure is below acceptable tolerance. A chime will sound when the FIRE BOTTL LOW message appears. Appearance of an amber EICAS message FIRE DETECT FAIL L - R indicates that the annunciated fire detection circuit is inoperative.

All test, detection, and extinguishing features are electrically powered from the main DC buses requiring either external power, the battery switch(es) in BATT, or a generator on the line for operation.

AUXILIARY POWER UNIT FIRE PROTECTION

The auxiliary power unit fire detection and extinguishing system is comprised of an integral sensor unit, a responder unit, an APU FIRE indicating light/switch, a fire bottle and the required electrical circuits. Its purpose is to notify the operator of an overheat condition at the auxiliary power unit (APU), which is mounted in the stinger, and to extinguish fires at the APU or in the APU area.

If the fire detection system senses an overheat condition in the APU area, the APU FIRE light on the copilot's panel will illuminate, an EICAS message APU FIRE, (red) will be annunciated on the EICAS panel, accompanied by a double chime, and the MASTER WARNING will illuminate. The fire bottle is discharged by pressing the indicating light/switch, which will go out when the fire is extinguished.

A cyan FIRE BOTTL LOW APU annunciation on the EICAS indicates that the APU fire bottle pressure is below the minimum required for safe operation. An amber FIRE DETECT FAIL A annunciation on the EICAS means that the APU fire detection system is inoperative.

The single fire extinguisher bottle is mounted below the firewall fairing, and dispenses extinguishing agent through a single tube, which has a tee fitting on the end. The extinguishing agent is Halon, which is pressurized with dry nitrogen propellant.

System test is accomplished by turning the cockpit rotary test switch to FIRE WARN. Proper system operation is indicated by illumination of the APU FIRE indicating light/switch, illumination of the MASTER WARNING light, and the appearance of the red EICAS message APU FIRE.

BAGGAGE COMPARTMENT SMOKE DETECTION

The baggage compartment smoke detection system is comprised of an optical sensor type detector, mounted on the left side of the baggage compartment in a protective housing.

The smoke detection system serves to notify the flight crew of smoke or fire in the tailcone baggage compartment. If smoke is detected, an electrical circuit is made and the sensor sends a signal to the EICAS system, which displays a red visual message BAGGAGE SMOKE, and sounds a double chime tone. The MASTER WARNING light will also illuminate.

The detection system is tested by selecting SMOKE/DET on the rotary test switch in the cockpit. If the system tests good the red BAGGAGE SMOKE CAS message will appear.

If the baggage smoke annunciator illuminates, the baggage compartment isolation (ISO) valve should be closed and the airplane should be landed as soon as possible. The valve will not reopen until zero cabin differential pressure is achieved at low cabin altitude.

FUEL

The Citation X fuel system is comprised of the storage, distribution, refueling/defueling, and indicating systems. The storage system is made up of a set of integral tanks in each wing, and a center wing tank which includes a forward fairing fuel tank. Each wing tank has a hopper tank which is integral to it. The two wing tanks incorporate check valves and baffles allowing each wing tank complex to function as a single tank. Other integral components of the storage system are the gravity fuel fillers, drain valves, flapper check valves, vent system components, positive/negative pressure relief valves and all of the associated system plumbing. Transfer capability is incorporated enabling all usable fuel to be available to either engine.

Each wing tank holds a total of 521 gallons (3518 Lbs.) of fuel, which includes the hopper tank. The center wing tank holds 888 gallons (5594 Lbs.), 207 (1397 Lbs.) of which are contained in the forward fairing tank. Total fuel capacity of the airplane fuel system is 1927 gallons; at 6.75 pounds per gallon the available fuel weight is 13,031 pounds.

System operation is fully automatic throughout the normal flight profile. Manual fuel system control and monitoring is available through the boost pump switches, wing gravity transfer switch (GRVTY XFLOW), The fuel CROSSFEED switch, the CTR WING XFER O'RIDE switch, fuel quantity and flow indicators, and EICAS messages, which warn of abnormal system operation. A low fuel level warning system, which indicates through the EICAS system functions independently of the normal fuel quantity indicating system.