CHAPTER 20 – POWER PLANT

LIST OF ILLUSTRATIONS

THIS PAGE INTENTIONALLY LEFT BLANK

1. INTRODUCTION

The airplane is equipped with two General Electric CF34-8C5 high bypass ratio turbofan engines which have a normal take-off thrust rating of 13,600 pounds. The engines are controlled by a full authority digital electronic control system (FADEC). In the event of an engine failure during takeoff, an automatic power reserve (APR) function of the FADEC, will increase the thrust on the remaining engine to 14,510 pounds.

The engine is a dual rotor assembly consisting of a fan rotor (N1) and a compressor rotor (N2). The N1 rotor consists of a single-stage fan connected through a shaft to a 4-stage low pressure turbine. The N2 rotor is a 10-stage axial flow compressor connected through a shaft to a 2-stage high pressure turbine.

For normal engine function, intake airflow is accelerated through the single-stage N1 fan and is divided into two airflow paths:

- Bypass air - Air that is ducted around the engine to produce most of the thrust. Thrust reversers are used to divert the bypass air forward to assist in braking on the ground.

- Core air - Air that enters the engine core section is compressed, mixed with fuel and ignited. The gases pass through the high pressure turbine which drives the compressor. Air from the high pressure turbine passes through the low pressure turbine which drives the N1 fan. The exhaust gases are then accelerated through the exhaust nozzle to produce a portion of engine thrust.

A variable geometry (VG) system regulates airflow through the compressor by changing the position of the compressor inlet guide vane and the variable geometry stator vanes on the first four stages of the compressor. This is done to prevent compressor stall and surge by optimizing the angle of attack of the vanes. The VG system is controlled by FADEC and positioned by actuators through a mechanical linkage. High pressure fuel from the engine fuel metering unit is used to hydraulically move the actuators.

An operability bleed valve provides additional compressor airflow control by extracting bleed air to off-load the compressor during starts and high aerodynamic loads. The operability bleed valve is controlled by FADEC and hydraulically actuated by high pressure fuel from the fuel metering unit.

The N2 compressor drives the accessory gearbox. Mounted on the gearbox are:

- Engine lubrication pump and integral oil reservoir

- FADEC alternator

- Hydraulic pump

- Engine fuel pump and fuel metering unit

- Integrated drive AC generator

- Air turbine starter

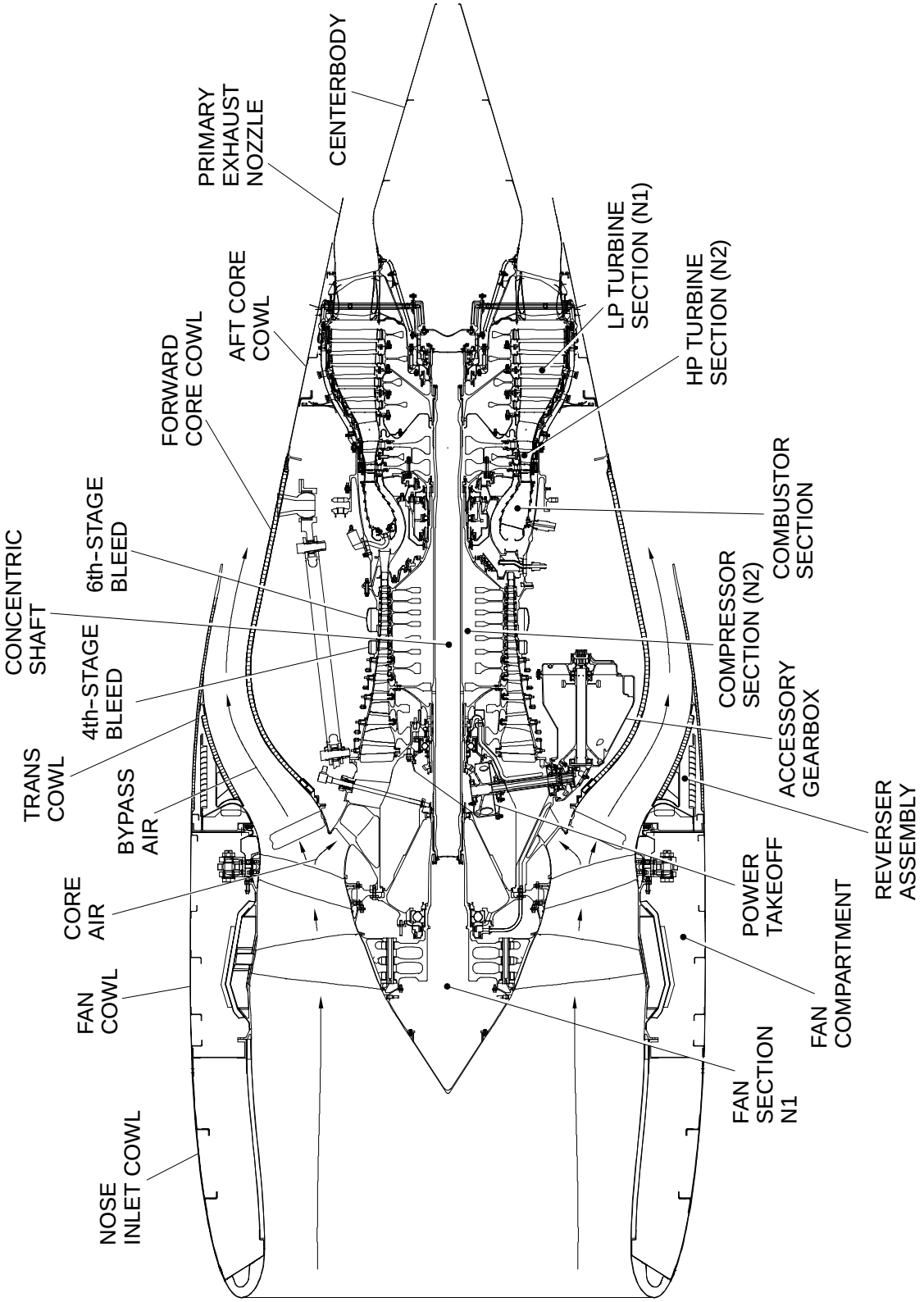

Power Plant – Cross Section
Figure 20-20-1

1. THRUST CONTROL

Thrust control is provide using thrust levers and managed by a full authority digital electronic control system (FADEC).

A. Thrust Levers

Thrust levers control the application of forward thrust. Idle / shutoff release latches are used to remove mechanical locks that guard against inadvertent movement of the thrust levers. Lever position is monitored by the FADEC which uses the information to compute a target thrust rating. Thrust indications are displayed on the EICAS primary page.

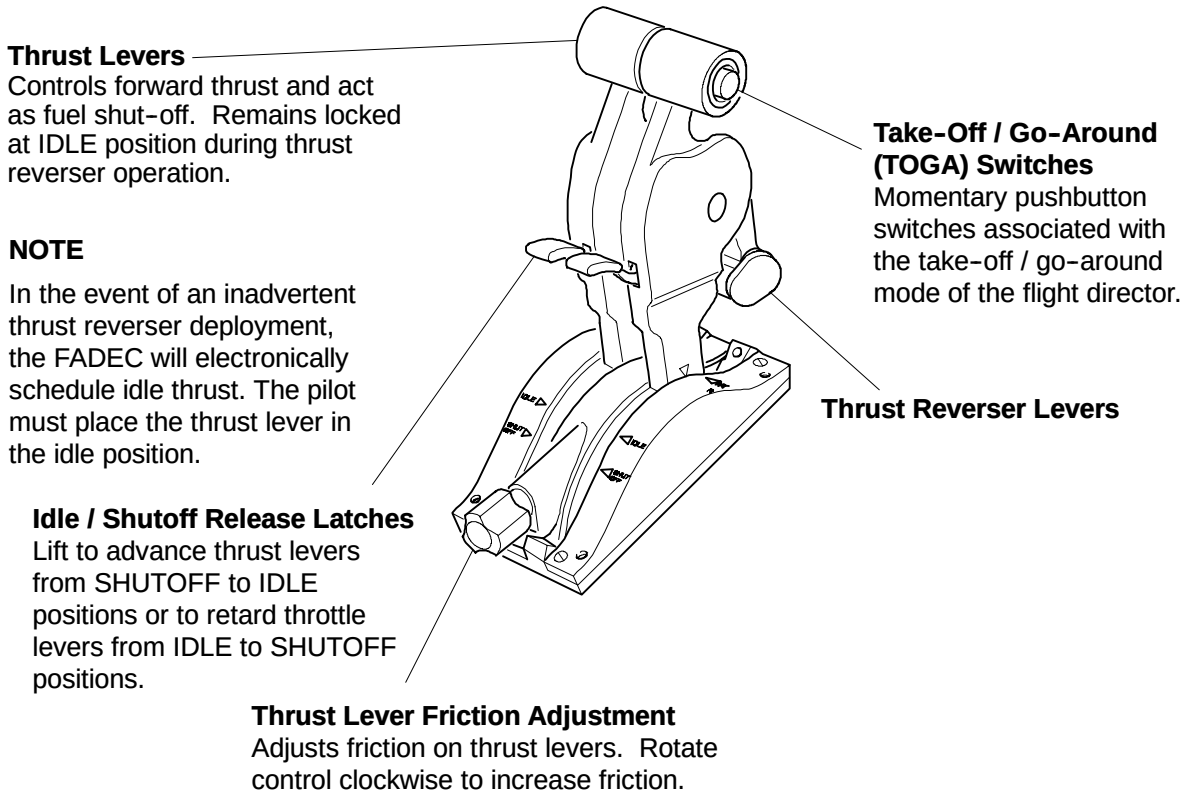

Thrust Control – Thrust Levers
Figure 20–20–1

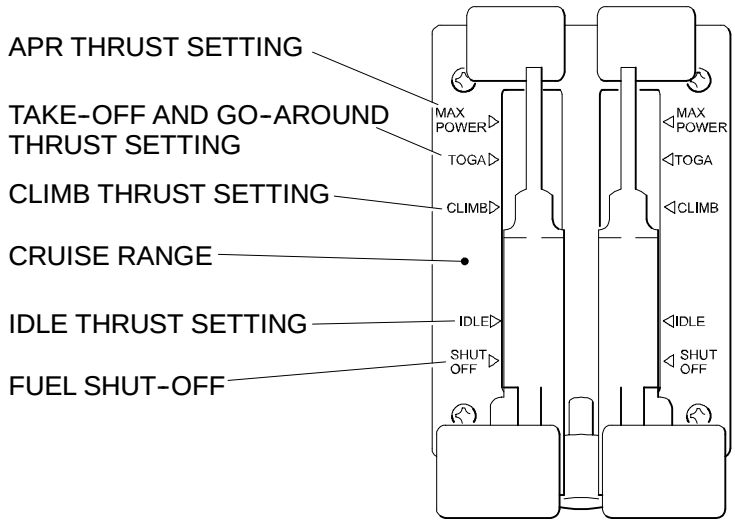

Thrust Control – Throttle Quadrant Setings
Figure 20–20–2

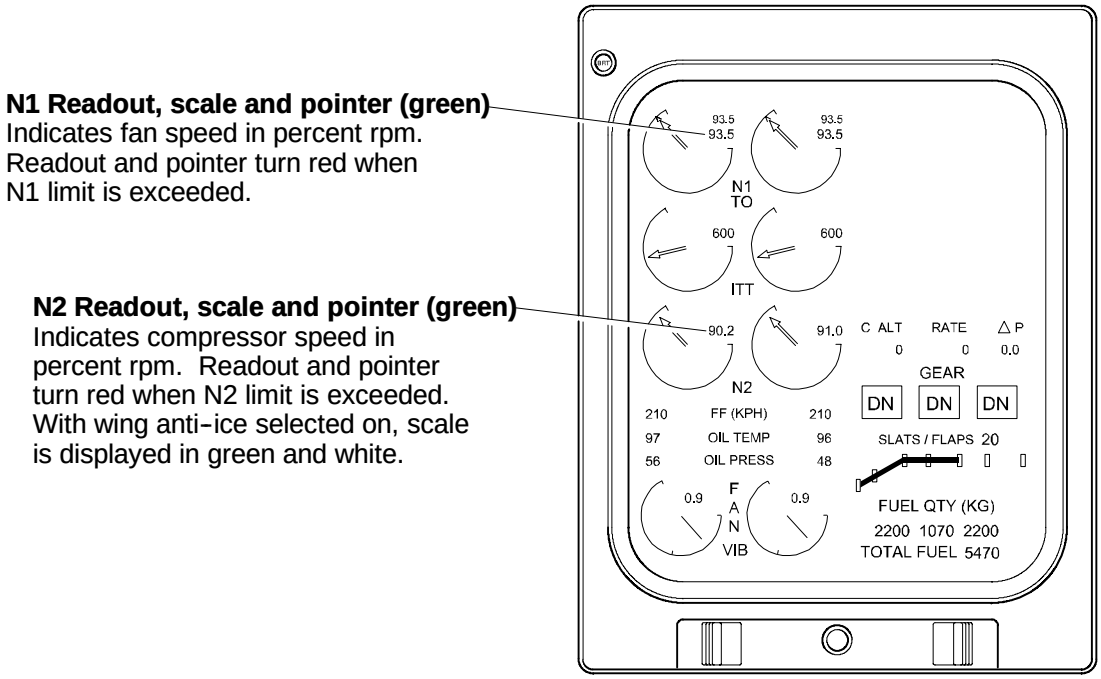

Primary Page

Thrust Control – N1 & N2 Readout Scale and Pointer <1001>
Figure 20–20–3

B. Full Authority Digital Electronic Control

Each power plant has its own dual channel FADEC computer. One FADEC channel provides engine control and the other channel operates as a standby channel. Both channels share information through a cross-channel data link. Channel control is alternated on each successive engine start.

The FADEC system is powered by the aircraft electrical system until N_2 reaches 50% rpm. Above 50% N_2 rpm, a gearbox mounted alternator supplies power to the FADEC.

On the ground, normal-rated takeoff thrust is calculated when electrical power is first applied to the aircraft. The target N_1 is continuously updated for changes in Mach number, ambient temperature and pressure altitude.

When the thrust lever is placed in idle, the minimum optimal N_2 idle rpm is programmed by the FADEC system. Idle rpm is dependant upon atmospheric information, bleed air load and phase of flight.

The FADEC computes the optimal target thrust rating for each thrust lever position and presents the target or maximum value on the N_1 gauge of the EICAS primary page.

The thrust mode annunciation on the EICAS primary page identifies the position of the thrust levers during most phases of operation, or may indicate an armed condition prior to lift off and on approach. Annunciated thrust modes are: CRZ (thrust levers are in the cruise range), CLB (the thrust levers are in the climb detent), TO (ground operations or the thrust levers are in the TOGA detent for takeoff). GA (thrust levers are in the TOGA detent for in flight go around), MCT (thrust levers are in the climb detent and OEI is active or high power has been selected), FLX (flex power programmed).

With both engines operating, the thrust levers are normally moved together and a single thrust mode annunciation is presented. When the thrust levers are moved separately, the thrust mode annunciation reflects the position of each thrust lever. When the thrust lever is in the SHUTOFF position, a solid amber line is displayed.

Flex power is routinely used for takeoff when weather and runway conditions are favorable. Flex thrust takeoffs reduce fuel consumption and extend the usable life of the engine.

Flex power is selected by entering an assumed temperature on the PERF MENU page of the FMS CDU. If the FMS is not available, the assumed temperature can be entered on the EICAS menu page using the EICAS control panel. The assumed temperature for Flex power can only be entered when:

- The thrust levers are in the IDLE or SHUTOFF detents
- The aircraft has been in a weight on wheels (WOW) configuration for at least one minute
- The assumed temperature entered is greater than the actual OAT
- The airspeed is less than 65 knots

The assumed temperature can be cleared by selecting DEL on the FMS CDU or if the FMS is not available, by selecting FLX RESET on the EICAS menu page. To clearly identify flex power from other thrust modes, the flex indications are displayed in magenta on the N_1 gauges.

NOTE

The FLX indications on the EICAS menu page are only displayed if the FMS has failed or is not available.

When programmed, the FLX power setting is activated by the FADEC when the thrust levers are in the TOGA detents.

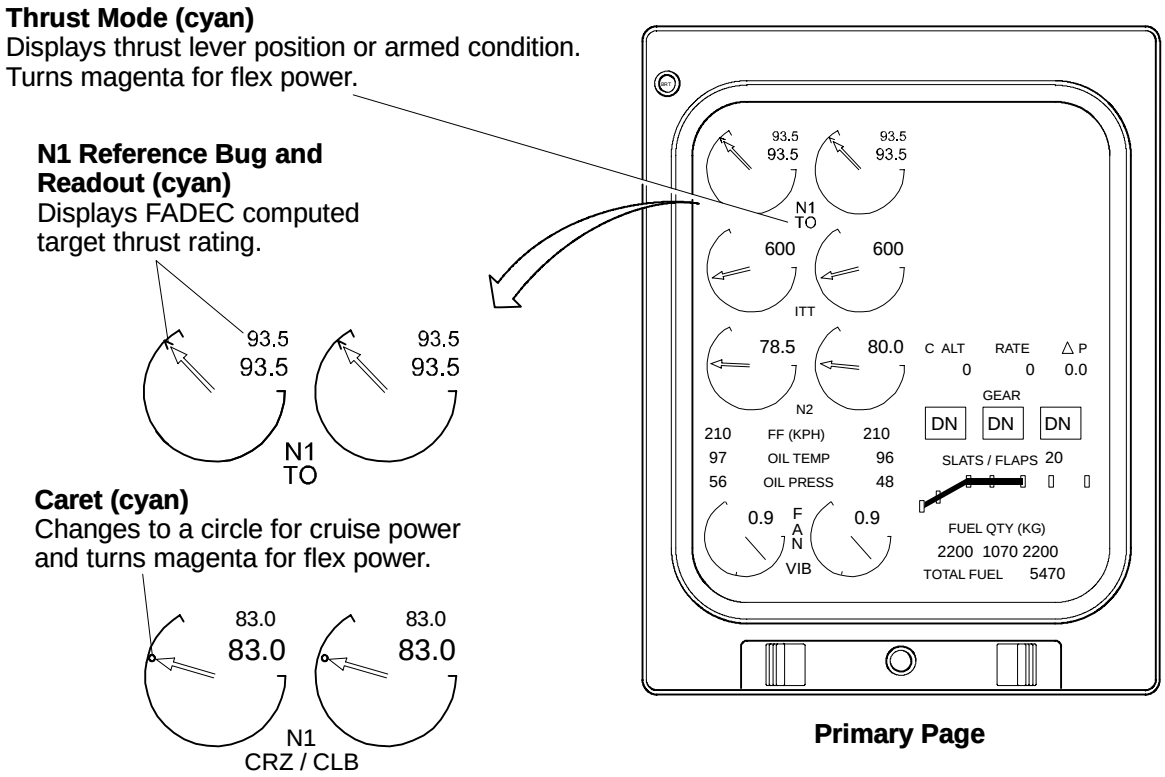

Thrust Control N1 Reference Bug and Readout <1001>
Figure 20–20–4

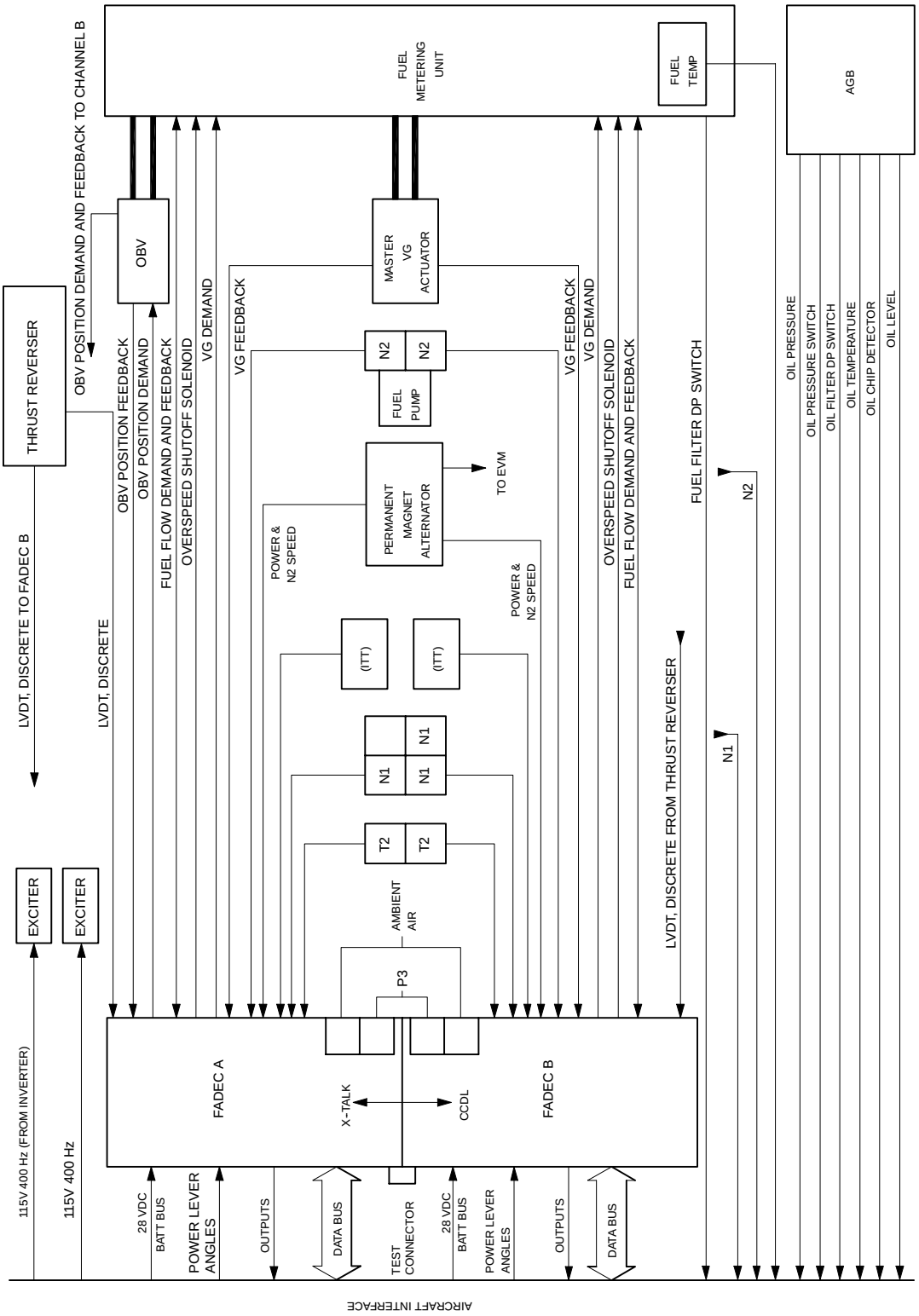

FADEC/FMU Interface
Figure 20–20–5

C. Automatic Power Reserve

The automatic power reserve (APR) system (which is a feature of the FADEC) monitors for engine failures and/or power loss during takeoff and climb. The APR feature is armed during takeoff when the N_1 rpm of both engines are within 8% of the take off N_1 reference value. On the approach, the APR system is armed for the go-around with either engine available and flaps greater than 20° or landing gear down.

A failure is detected when an engine N1 speed decreases below 15% of the set power. If the detected failure was due to an N1 mismatch, the failure signal is cleared when the N1 mismatch becomes less than 13%.

When an engine fails, the APR will automatically increase the thrust on the good engine to maximum continuous thrust (MCT). The amount of the increased thrust depends on the position of the thrust levers at the time of the engine failure. This automatic increase in thrust is divided into three categories:

- APR power when the thrust levers are in the TOGA detents
- Automatic increase to maximum continuous thrust (MCT) when the thrust levers are in the climb detent
- Proportional increase in power when operating with thrust levers in the cruise range

APR (Icon) (green)
Displayed when APR system is activated by an engine failure, or when a thrust lever is set to the MAX POWER detent.

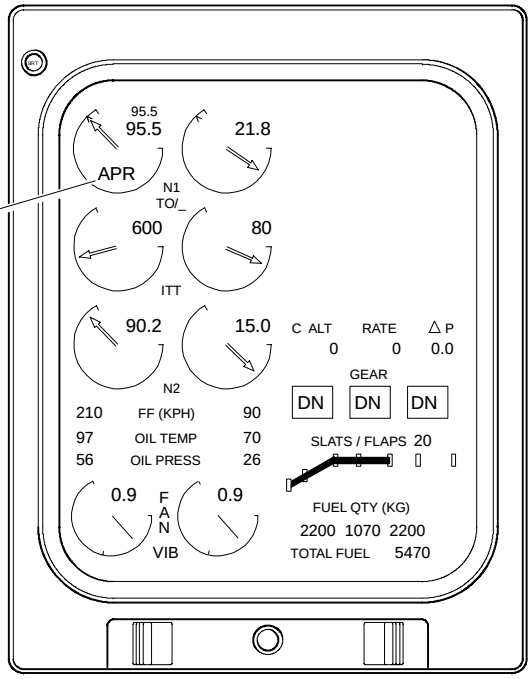

Primary Page

Thrust Control Automatic Performance Reserve <1001>
Figure 20–20–6

D. High Power Schedule

NOTE

There are no operational procedures in which the use of this switch is required. Use of this switch is also prohibited by limitations.

CAUTION

Use of APR may adversely affect engine life under certain conditions (Refer to the Flight Crew Operating Manual, Volume 2 – LIMITATIONS, Power Plant).

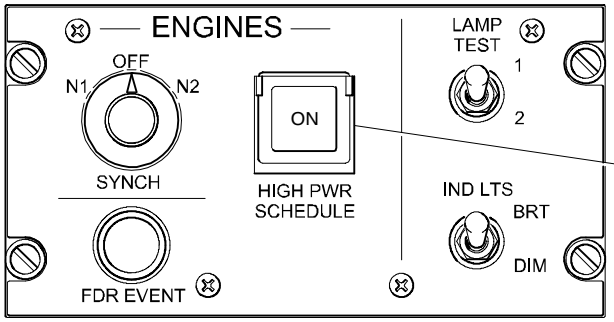

HIGH PWR SCHEDULE (Guarded)
If selected, engines will operate on the one engine inoperative power schedule. Engine power (both) will advance to MCT if thrust levers are in the CLIMB detent. Engine power (both) will advance to APR if thrust levers are in the TOGA detent.

Engine / Miscellaneous Test Panel Center Pedestal

High Power Schedule Pushbutton
Figure 20–20–7

E. N_1 and N_2 Synchronization

In the cruise range, thrust is set to a specific value by the FADEC based on throttle position. Synchronization allows the FADEC to match the fan (N1) or the core (N2) speed of the two engines for noise reduction. Synchronization is selected by using the SYNCH switch on the engine control panel . The left engine is designated as the master engine and the right engine will be slaved to it.

For N_1 synchronization to be enabled, the right engine N_1 must be within 1.5% of the left engine N1.

For N_2 synchronization to be enabled, the right engine N_2 must be within 7.5% of the left engine N1.

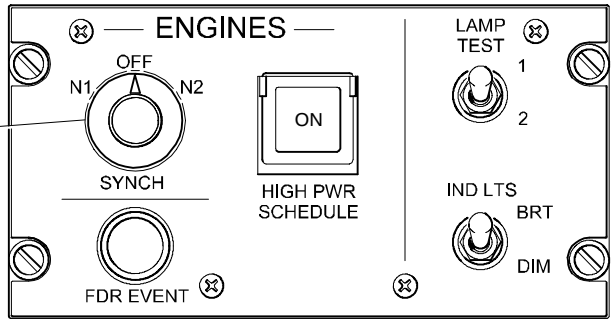

SYNCH
Used to select engine synchronization.
- N1 – Matches the fan speed of the right engine to the fan speed of the left engine.
- OFF – Selects synchronization off.
- N2 – Matches the core speed of the right engine to the core speed of the left engine.

Engine / Miscellaneous Test Panel
Center Pedestal

Engine Synchronization Switch – Engine/Micscellaneous Test Panel
Figure 20–20–8

F. Engine Overspeed Protection

Engine overspeed protection is provided by the FADEC when the N2 exceeds 107%. When an overspeed condition is detected, the FADEC energizes the overspeed solenoid which closes the overspeed shutoff valve which causes the pressurizing and shutoff valve to close (see section 55 of this chapter). This stops fuel flow to the combustor and the engine flames out. The FADEC, detecting the flame out, turns the ignition ON. When the N2 speed decreases below the overspeed threshold, the overspeed solenoid is deenergized and fuel is readmitted to the engine for automatic relight.

The overspeed circuits of both FADEC channels are active regardless of which FADEC channel is in control. The FADEC will also close the pressurizing and shutoff valve if three or more overspeed conditions have been detected within 30 seconds.

G. Engine N2 Indications When Using Wing Anti–Ice

Under certain flight conditions, when the engines are operating at idle, the engines may not be able to provide sufficient bleed air flow to the wing anti-ice system

When the wing anti-ice is selected ON, the FADEC will provide a signal (based on ambient conditions) to the N2 indicators which will display a partial white band below the normal green band. Maintaining the N2 in the green operating range will ensure sufficient bleed air flow is available to the wing anti-ice system. If the N2 decreases into the white range, the N2 pointers and digital indications will turn white and the L (R) WING A/1 caution message may be displayed momentarily until the N2 is increased back into the normal green range.

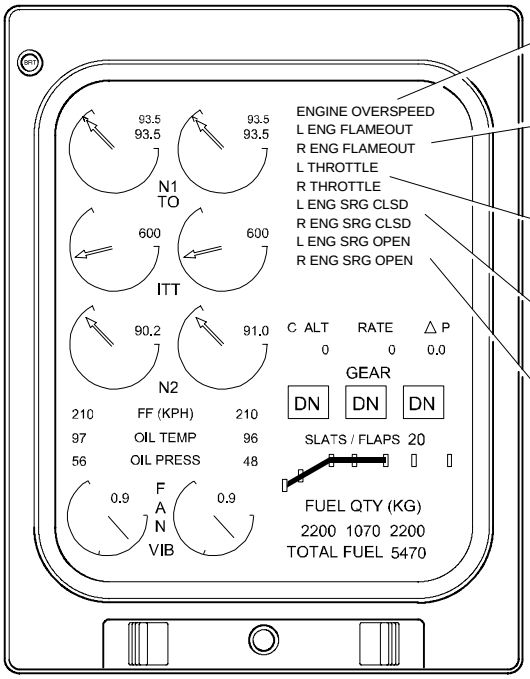

ENGINE OVERSPEED warning (red)
Indicates that N1 or N2 has exceeded redline for more than four seconds.

L or R ENG FLAMEOUT caution (amber)
Indicates flameout of respective engine, FADEC was not successful with re-light and thrust lever not at shut-off.

L or R THROTTLE caution (amber)
Indicates failure of respective thrust lever. FADEC will maintain last power level setting until approach.

L or R ENG SRG CLSD caution (amber)
Indicates that respective operability bleed valve has failed closed.

L or R ENG SRG OPEN caution (amber)
Indicates that respective operability bleed valve has failed open.

Primary Page

L or R ENG SHUTDOWN status (white)
Indicates that respective engine has shut down.

L or R THROTTLE FAULT status (white)
Indicates a fault in respective thrust lever.

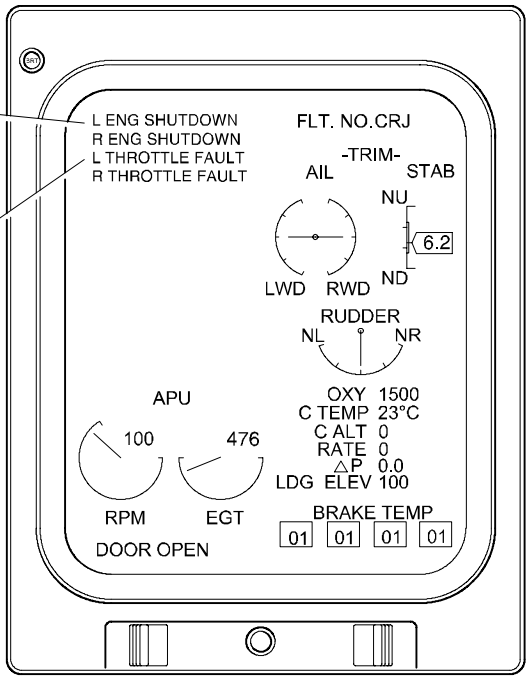

Status Page

Thrust Control Engine Overspeed Warning <1001>
Figure 20-20-9

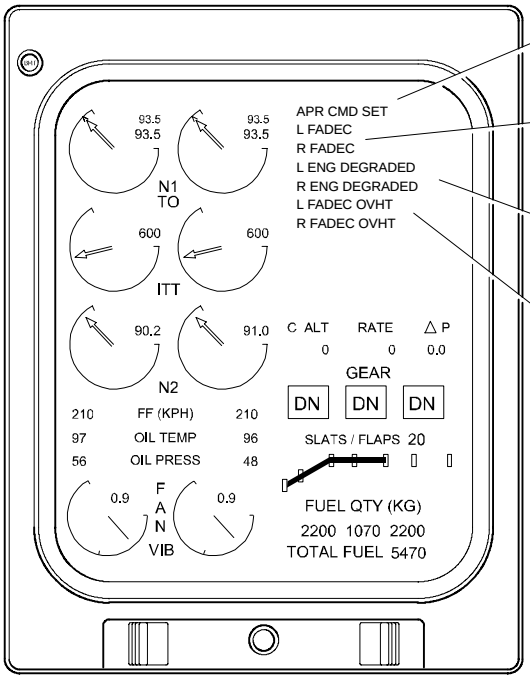

APR CMD SET caution (amber)
Indicates an uncommanded APR activation.

L or R FADEC caution (amber)
Indicates overspeed test failed or a combination of faults that may affect engine in-flight performance.

L or R ENG DEGRADED caution (amber)
Indicates that FADEC detected a combination of faults that may result in reduced engine control authority.

L or R FADEC OVHT caution (amber)
Indicates an overheat condition of respective FADEC.

ENGS HI PWR SCHED advisory (green)
Indicates that both engines are at a high power schedule.

ENG SYNC OFF status (white)
Indicates that engine synchronization manually selected off by flight crew.

L or R FADEC FAULT 1 status (white)
Indicates that one FADEC channel is inoperative or a combination of faults that may affect flight performance.

L or R FADEC FAULT 2 status (white)
Indicates a combination of faults that are less serious than the faults covered by a FAULT 1 status message.

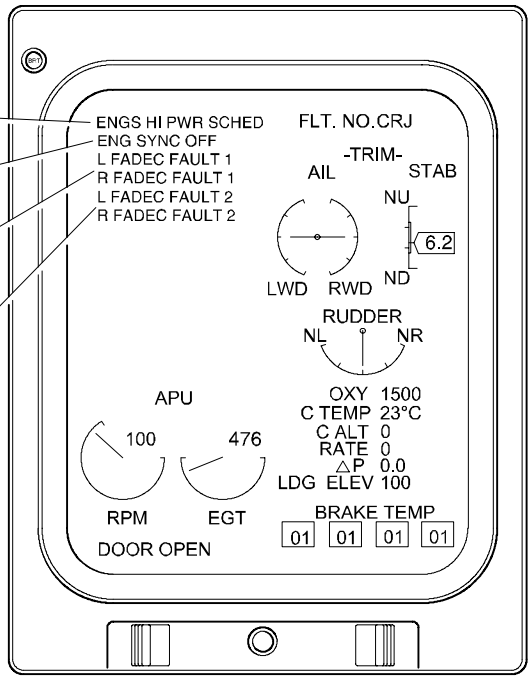

Thrust Control APR CDM Set Caution <1001>
Figure 20–20–10

H. System Circuit Breakers

SYSTEM	SUB-SYSTEM	CB NAME	BUS BAR	CB PANEL	CB LOCATION	NOTES
Thrust Control	FADEC	FADEC R CH A	BATTERY BUS	5	B6	
		FADEC R CH B			B7	
		FADEC L CH A			B8	
		FADEC L CH B			B9	

THIS PAGE IS INTENTIONALLY LEFT BLANK

1. STARTING AND IGNITION SYSTEMS

The starting and ignition systems are controlled by the Full Authority Digital Electronic Control (FADEC).

A. Starting System

Pressurized air and DC electrical power are required for starter operation. The engines can be started using air from the auxiliary power unit, from a ground source, or by using cross bleed air from a running engine. Pneumatic pressure indications are shown on the EICAS ECS synoptic page. Engine starting is initiated by respective START switchlights on the Start/Ignition panel, located on the overhead panel. The start sequence may be terminated at any time by pressing the engine STOP switchlight.

When the engine START switchlight is pressed, the FADEC opens the starter control valve which allows pressure from the pneumatic manifold to rotate the starter. The starter drives the engine accessory gearbox, which in turn drives the engine N_2 core section. When the engine has accelerated to 20% N_2 rpm, the thrust lever is advanced to the idle position to turn the fuel on. The FADEC will then enable the ignition system for engine light–off. As the engine accelerates to the idle speed condition, the starter will cut-out at 50% N_2 rpm.

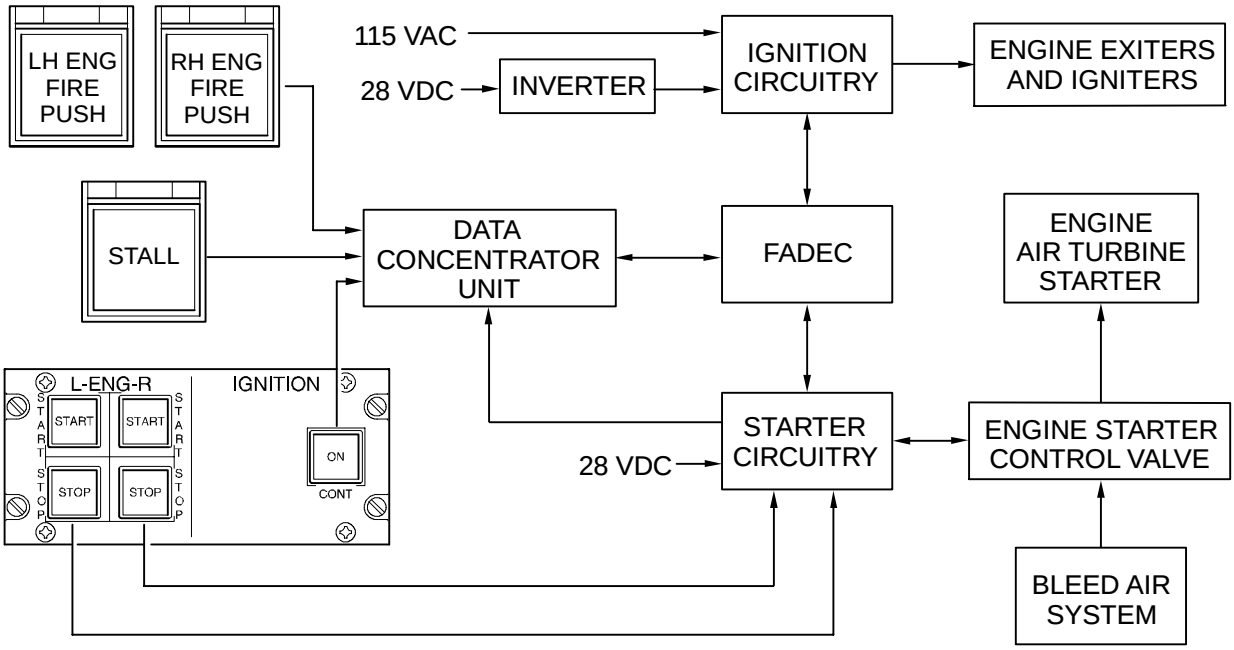

Starting and Ignition Systems Block Diagram
Figure 20–30–1

B. Ignition System

The engine ignition system provides high-energy electrical sparking to ignite the fuel/air mixture in the combustion chamber during start. The system also provides continuous ignition during icing conditions, in-flight restarts and/or when the aircraft approaches a high angle of attack (stall).

Each engine has two independently controlled AC ignition systems. Each system (A and B) consists of two ignition exciters and two igniter plugs. Ignition system A is powered by the AC essential bus and ignition system B is powered from the battery bus through a static inverter. Each system supplies electrical power to fire a dedicated igniter in both engines. The ignition systems are automatically controlled by the FADEC but if required, can be manually activated by selecting the CONT switchlight on the Start/Ignition panel which will activate both ignition systems on both engines. The engines are normally started using only one of the systems. Logic within the FADEC causes the ignition system to alternate between A and B system on each successive start.

During engine start, if the FADEC senses a failed ignitor it will automatically switch to the other ignitor after a 15 second time delay and a L or R IGN A or B FAULT status message will be posted on the EICAS status page.

NOTE

During start, if the throttle is selected to SHUT OFF or the STOP switchlight is pressed before the 15 second time delay has elapsed, the IGN FAULT status message will not be posted on the EICAS.

In the event of an engine fire, each engine FIRE PUSH switchlight, on the glareshield, supplies a command signal to the FADEC to disable both ignition systems on the affected engine.

L ENG and R ENG START
Used to initiate engine start sequence.
- START (white) light indicates start is selected.

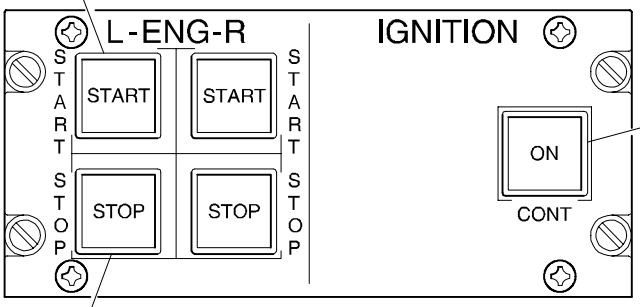

IGNITION CONT
Used to select continuous ignition of both ignitors on both engines.
- ON (white) light indicates continuous ignition is selected on.

Engine Start/Ignition Panel
Overhead Panel

L ENG and R ENG STOP
Used to stop engine start sequence.
- STOP (white) light indicates stop is selected.

Starting and Ignition Systems – Controls
Figure 20–30–2

Start Protection

On the ground, start protection functions are automatically provided by the FADEC to prevent engine damage due to either hot or hung starts. In flight, the start protection functions are inhibited to allow in-flight emergency engine starts.

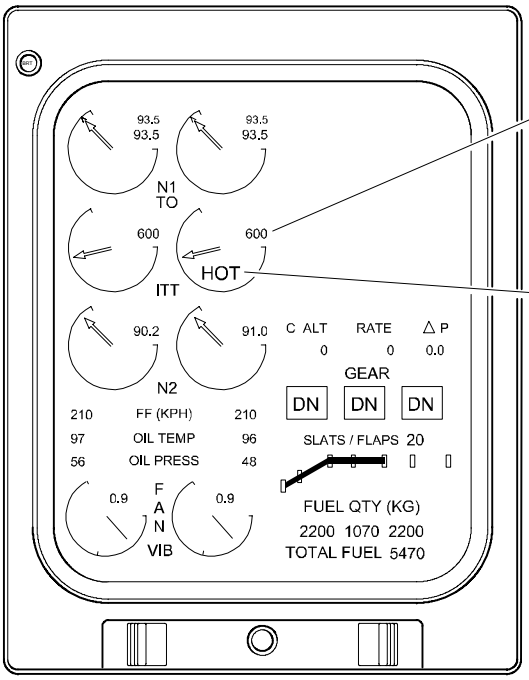

Primary Page

ITT Readout, scale and pointer (green)
Indicates temperature of engine exhaust gasses (C). Readout and pointer turn red when ITT limit is exceeded.

HOT (Icon) (red)
Displayed durind a hot start.

Primary Page ITT Readout Scale and Pointer <1001>
Figure 20–30–3

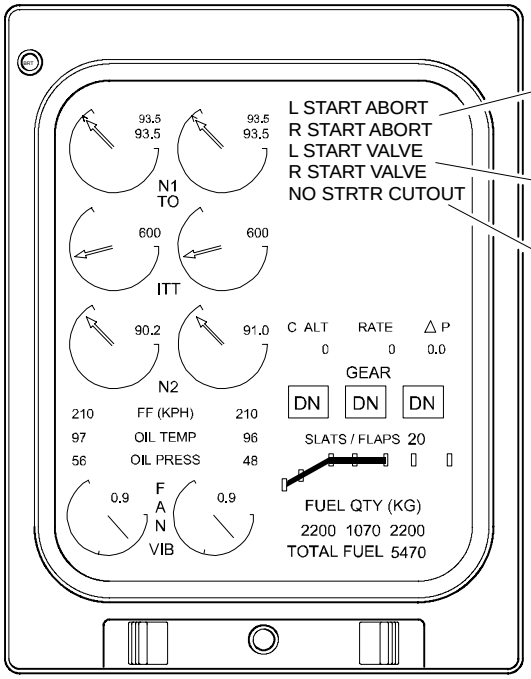

L or R START ABORT caution (amber)
Indicates a FADEC aborted start or an aborted start due to a hot or hung start (on ground only).

L or R START VALVE caution (amber)
Indicates that respective starter valve did not open when commanded.

NO STRTR CUTOUT caution (amber)
Indicates that starter valve is not closed with engine running.

Primary Page

L or R AUTO IGNITION advisory (green)
Indicates that FADEC has selected ignition on.

CONT IGNITION status (white)
Indicates that all ignitors have been selected on.

L or R IGN A or B FAULT status (white)
Indicates a fault in the respective ignition driver.

L or R ENGINE START status (white)
Indicates that engine start has been selected.

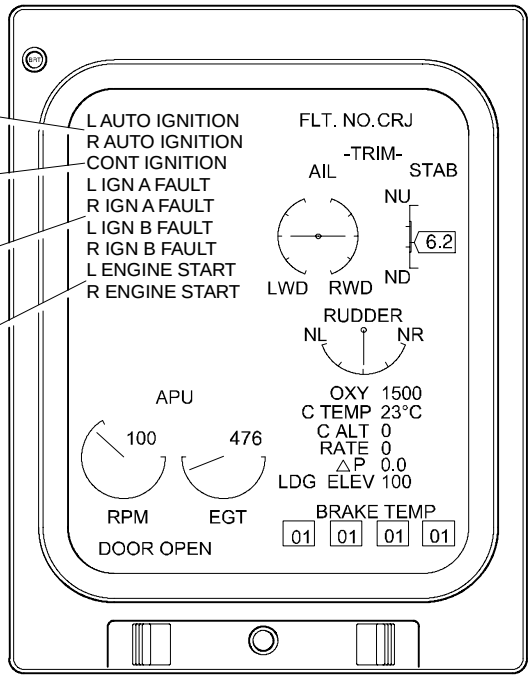

Status Page

L or R Start Abort and Ignition EICAS Messages <1001>
Figure 20–30–4

C. System Circuit Breakers

SYSTEM	SUB-SYSTEM	CB NAME	BUS BAR	CB PANEL	CB LOCATION	NOTES
Starting	Control Valves	ENG START L	BATTERY BUS	1	M5	
		ENG START R			M4	
Ignition	Igniters	ENG IGN A	AC ESSENTIAL		U7	
		ENG IGN B	BATTERY BUS	5	B10	

1. OIL SYSTEM

Each engine has an independent lubrication supply system. Each system consists of an oil pump and an oil reservoir which is integral to the accessory gearbox. The pressure pump draws oil from the reservoir and supplies it to the various engine components for cooling and lubrication. A usable oil quantity of 7.2 quarts (6.8 liters) allows 36 hours of operation at the maximum allowable oil consumption rate of 0.05 U.S. gallons per hour (189 ml/hr).

Oil temperature and pressure indications are displayed on the EICAS primary page. Oil filter impending bypass and chip detector indications are provided on the engine fault panel in the aft equipment compartment.

The lubrication system is pressurized by the main lube pump. The oil flows from the pump, passes through an oil filter and the oil/fuel heat exchanger. The oil then continues through the engine, for cooling and luricating, then to the engine sumps. Scavenge pumps return the oil to the reservoir after passing through a chip detector and de-aerator.

Sensors for the oil pressure indication and EICAS messages are located in the oil filter module mounted on the forward side of the oil tank. The chip detector also mounts on the accessory gearbox, in the scavenge oil return line.

During engine start, the oil pressure indications on the EICAS primary page are displayed with an analog gauge and a digital readout. When both engines are started and oil pressure is normal, the oil pressure gauges revert to N1 vibration gauges. The digital oil pressure indication remains.

Left and right engine oil tank quantities are shown on the EICAS MENU page.

OIL LEVEL INDICATION AND DURATION TABLE		
ENGINE OIL LEVEL INDICATION, %		
STOPPED [1]	RUNNING	DURATION OF AVAILABLE OIL UNTIL NEXT SERVICE, HOURS
100%	77%	36 hrs
80%	57%	26 hrs
50%	27%	10 hrs (1 day)
40%	17%	5 hours (1 flight)
< 40% DO NOT DISPATCH	< 17% DO NOT DISPATCH	
28 % Do not operate, service the oil tank [1]	15% Complete the flight, monitor oil temp and pressure.	**NOTE:** There is no EICAS OIL LEVEL indication if the oil quantity is less than 15%.
[1] The engine oil level check should be accomplished within 3 minutes to 1 hour after engine shutdown.		

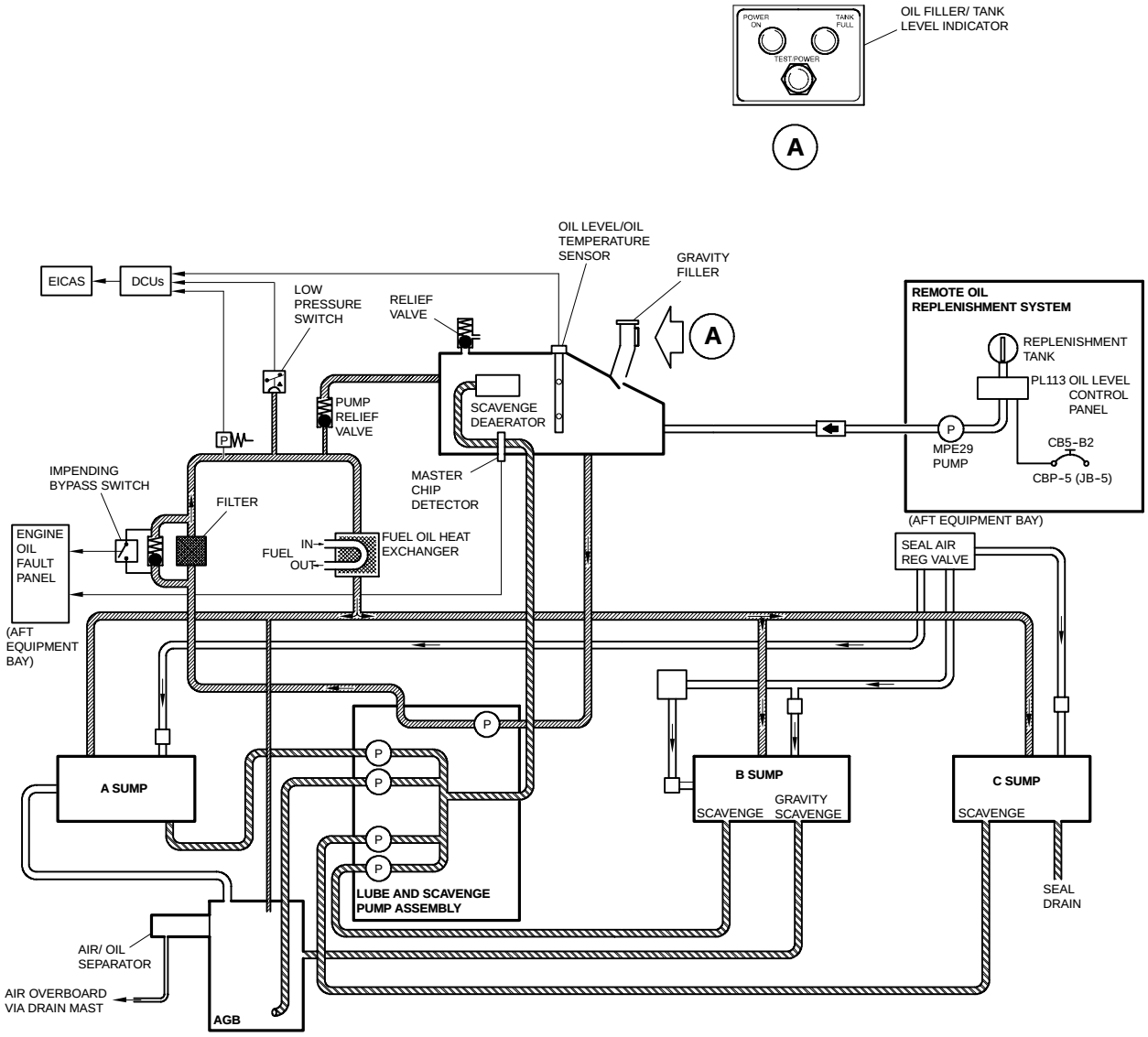

Oil Distribution System – Schematic <1213>
Figure 20–40–1

OIL TEMP
Displays engine oil temperature (in 1 °C increments).
- Green, -40 to 155 °C
- Amber, 156 to 163 °C
- Red, greater than 163 °C
- Amber dashes - Invalid data.

OIL PRESS
Displays engine oil pressure (in 1 psi increments).
- Red, 0 to 24 psi
- Green, 25 to 116 psi
- Amber, >116 psi
- Amber dashes - Invalid data.

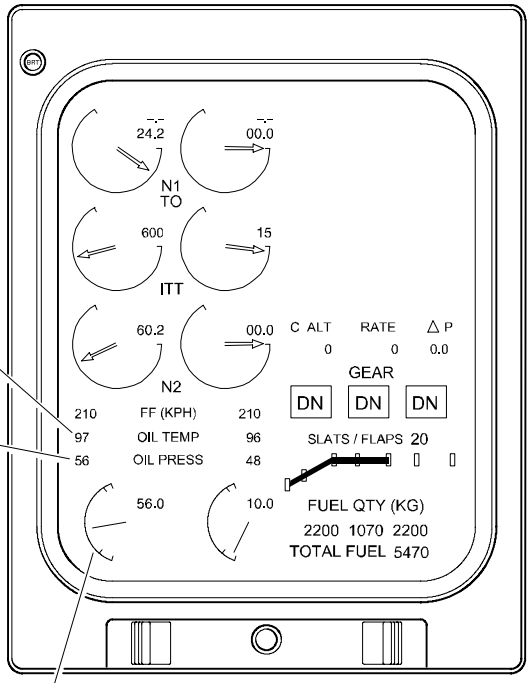

Primary Page

Oil Pressure Gauges
Indicates engine oil pressure. Replaced by FAN VIB gauges when both engines are running and oil pressure is above 24 psi.

Oil System – Oil Temp and Pressure EICAS Indications <1001>
Figure 20–40–2

OIL FILTER
- Indicator OFF – Respective oil filter operating normally.
- Indicator ON – Respective oil filter impending bypass is indicated.

TEST
Used to test indicating system. Oil filter and chip detector, LED indicators, indicate that the system is operational. LEDs remain ON until RESET is pressed.

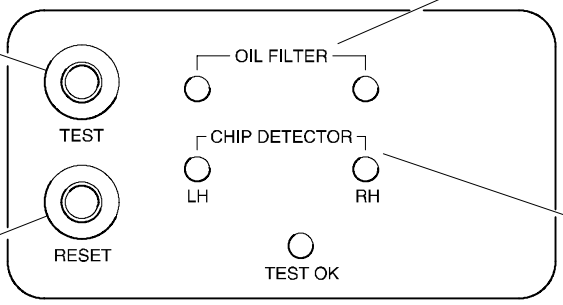

RESET
Used to reset oil filter and chip detect LEDs to normal indication.

Engine Oil Fault Panel
Aft Equipment Bay

CHIP DETECTOR
- Indicator OFF – Respective oil system operating normally.
- Indicator ON – Chip detection on the detection on the respective side is indicated.

NOTE

Do not reset detector flags unless instructed by maintenance or unless conducting maintenance functional check.

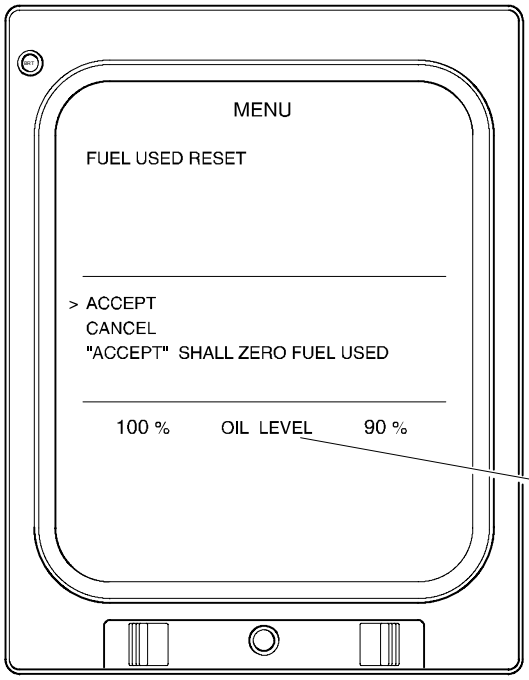

OIL LEVEL
Displays engine oil level as a percent of the maximum quantity.

Menu Page

Oil System – Oil Test and Oil Levels Controls and Indications
Figure 20–40–3

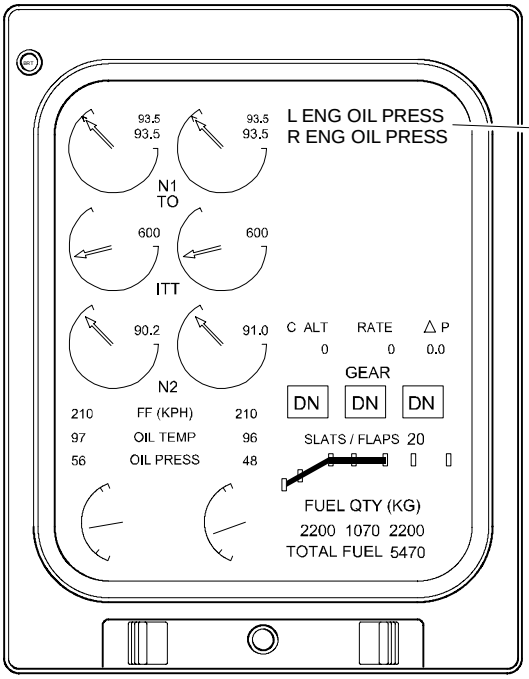

L or R ENG OIL PRESS warning (red)
Indicates oil pressure is less than 25 psi.

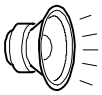

ENGINE OIL

Primary Page

L or R OIL LEVEL LO status (white)
Indicates oil level is below 57% with engine running or below 80% with engine not running.

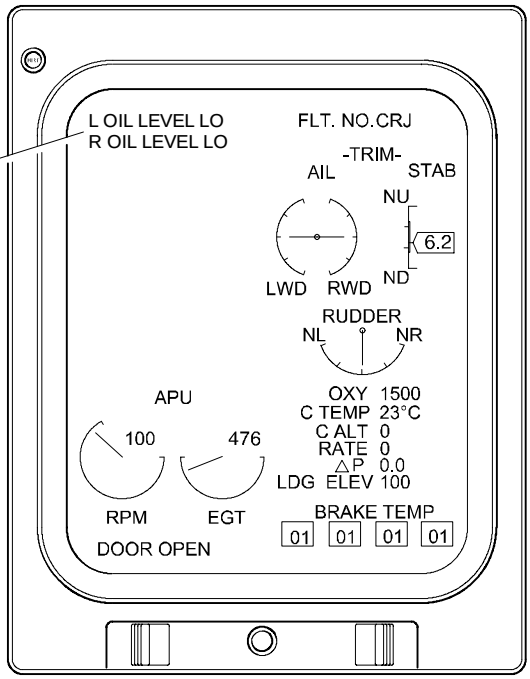

Status Page

Oil System - EICAS Indications 1001
Figure 20–40–4

A. Oil Replenishing System

The engine oil reservoir is manually replenished through an oil fill cap on the top of each engine. Access to the fill cap is gained by opening the engine cowlings. There is an oil level indicator adjacent to the fill cap.

The engine oil replenishment system is located in the aft equipment bay. The system enables the engine oil tanks to be filled remotely. The system includes a storage tank with sight glass level indicator, an electric pump, a control panel and an engine selector valve. <1213>

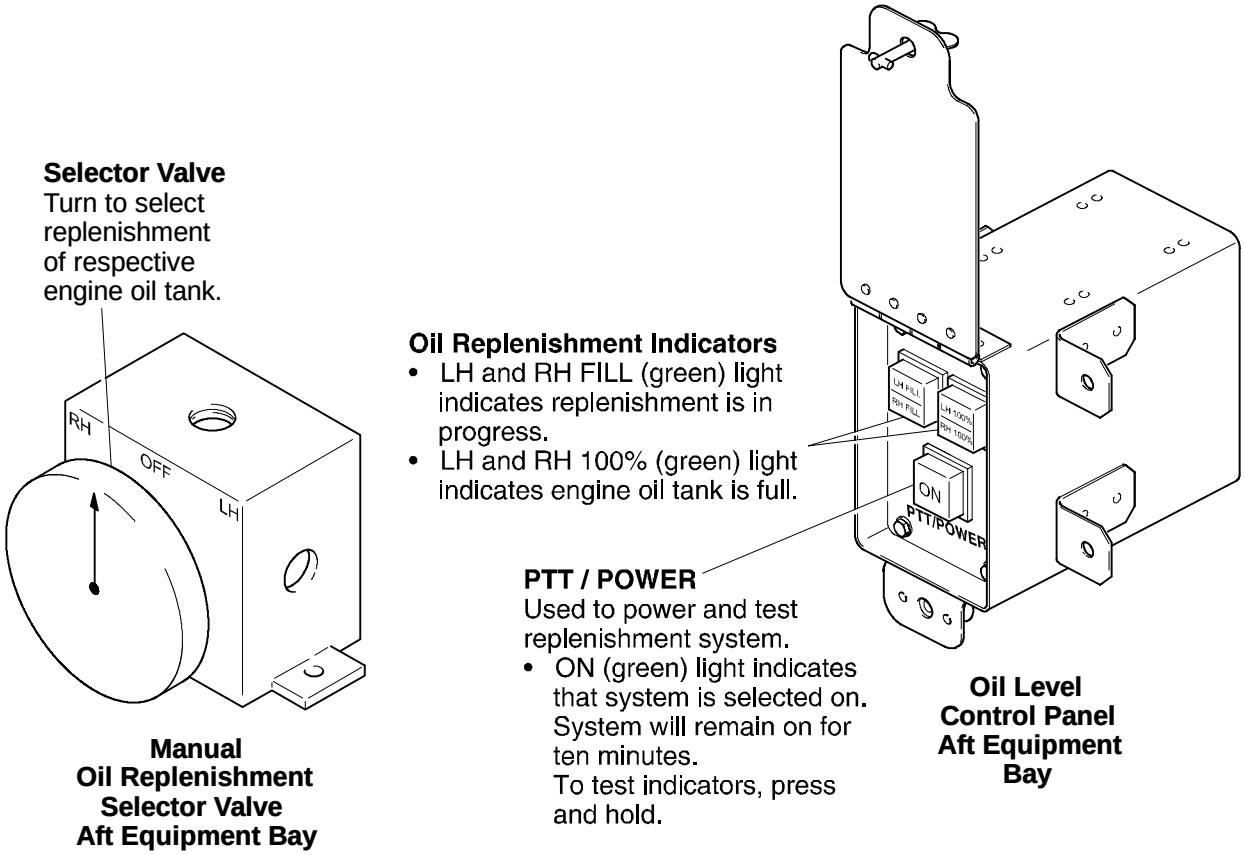

NOTE

The engine oil level check should be accomplished within 3 minutes to 1 hour after engine shutdown. The engines must be dry motored if the replinishment period is exceeded.
Do not allow more than 1.9 liters (2 U.S. quarts) to flow into the engine without dry motoring the engine for at least 30 seconds (prior to adding more oil).

Oil Replenishment System <1213>
Figure 20–40–5

B. System Circuit Breakers

SYSTEM	SUB-SYSTEM	CB NAME	BUS BAR	CB PANEL	CB LOCATION	NOTES
Oil System	Pressure	L ENG OIL PRESS	BATTERY BUS	1	M1	
		R ENG OIL PRESS	DC ESSENTIAL	2	S7	
	Indication	ENG OIL IND	APU BATTERY DIRECT	5	B2	
	Replenishment <1213>	ENG OIL REPL			B3	

THIS PAGE INTENTIONALLY LEFT BLANK

1. FUEL SYSTEM

Fuel from the collector tanks is supplied to the respective engine fuel pump unit by a main ejector or an electric booster pump, through the engine fuel feed shutoff valve.

Engine fuel distribution is controlled by a gearbox-driven fuel pump unit and a fuel metering unit. Pressurized fuel from the centrifugal pump goes through the heat exchanger, a filter then back to the fuel pump unit. The fuel/oil heat exchanger is used to cool engine oil and heat the combustion fuel.

The fuel pressure is then increased by the primary pump then sent to the fuel metering unit, operability bleed valve, VG actuator circuit and the overspeed circuit. Metered fuel is then supplied to the combustion chamber in relation to commands from the Full Authority Digital Electronic Control (FADEC). The FADEC receives input signals from thrust levers, air temperature and pressure altitude data from the air data system and information from internal engine sensors. The FADEC uses the information to regulate the fuel flow to the engine to obtain the desired engine thrust.

Eighteen dual-orifice (primary and secondary) fuel injectors are installed on each engine. The primary orifice is used to spray fuel into the combustor at low power settings. At power settings above idle, the secondary orifice is opened and both the primary and secondary orifices then spray fuel into the combustor.

Combustion fuel can be shut off by moving the thrust lever to the shutoff position or by selecting the engine fire push switch. Moving the thrust lever to the shutoff position, closes the shutoff valve of the fuel metering unit. The engine fire push switch closes the engine fuel feed shutoff valve.

Fuel is also used to control and actuate the operability bleed valve and variable geometry linkages for engine compressor surge and stall protection. Fuel is used to actuate and lubricate components within the fuel system.

Fuel not used for combustion is returned to the fuel system to provide motive flow for the main and scavenge ejectors in the fuel tanks.

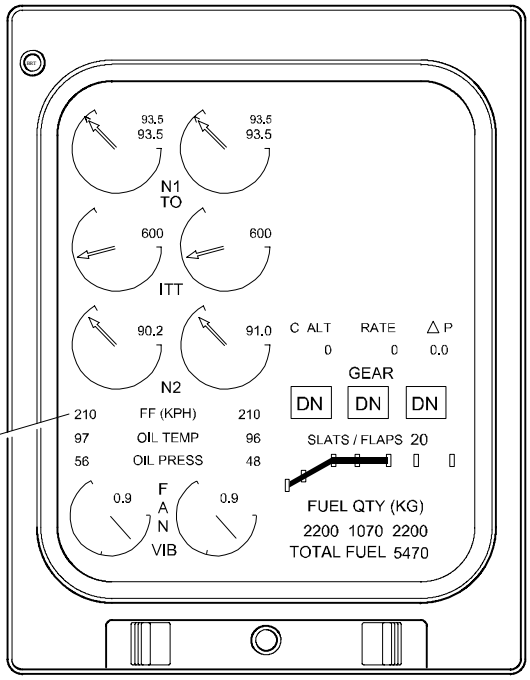

FF (green)
Indicates rate of fuel flow. Amber dashes indicates invalid data.

Primary Page

Fuel system – EICAS Indications <1001>
Figure 20–50–1

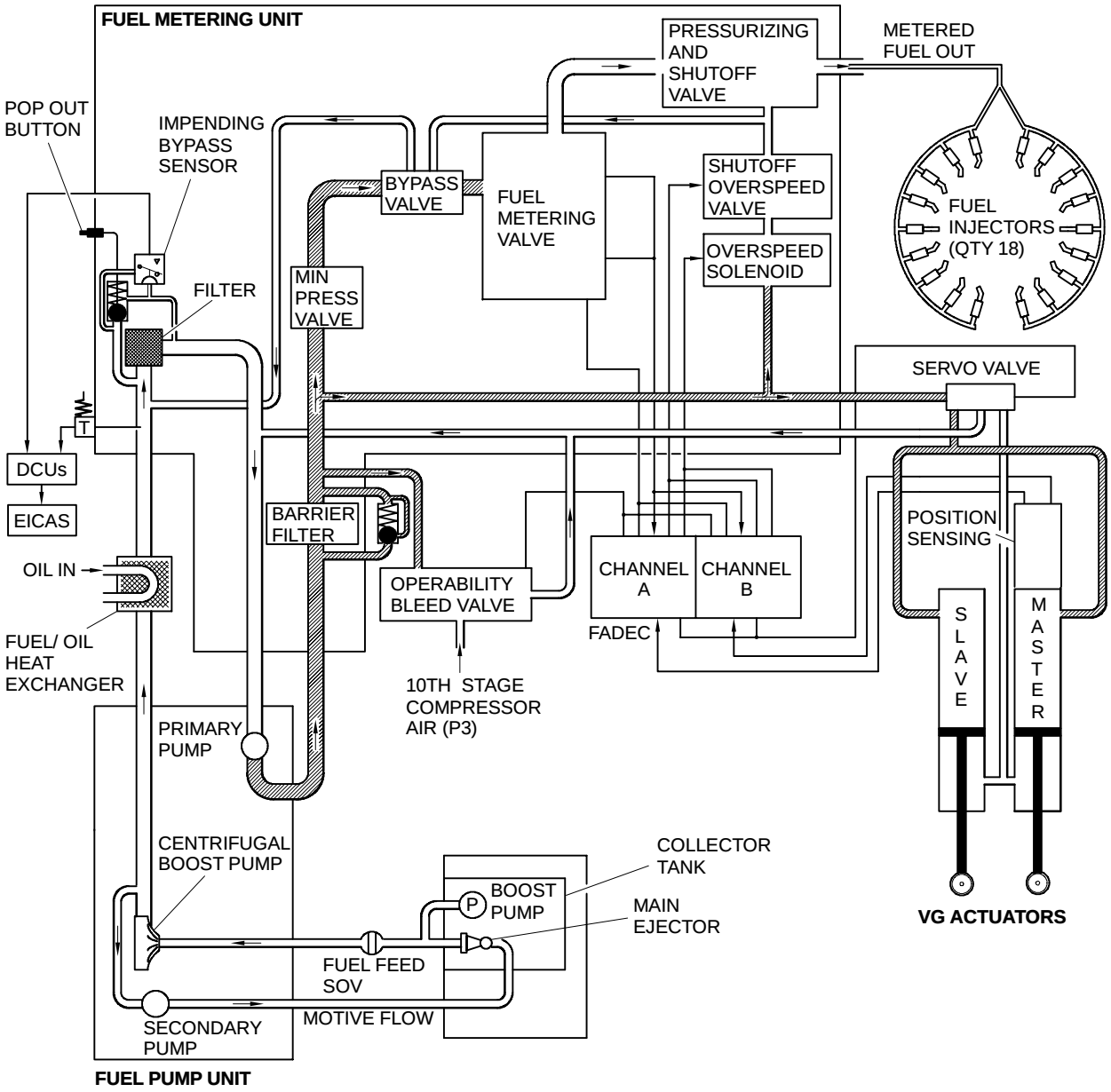

Fuel Distribution System Schematic
Figure 20–50–2

THIS PAGE INTENTIONALLY LEFT BLANK

1. INTERTURBINE TEMPERATURE (ITT) MONITORING

The engine ITT is measured by five probes mounted around the engine turbine section. The probes measure the gas path temperature at the exit of the high-pressure turbine (HPT). Each probe generates a voltage signal which is sent to the FADEC where the signals are averaged, converted to a digital output signal and then sent to the DCUs for the ITT display on the EICAS primary page.

The FADEC will detect ITT exceedances into the different areas of the exceedance chart (refer to figure 20-55-2) based on the tracking time verses temperature subsequent to an initial exceedance of 1006°C. The FADEC will supply an input to the EICAS (status message) to indicate each type of exceedance. Each eceedance into the B1 area is announciated for 4 seconds. Since the ITT must exceed the ITT Redline in order to be detected as an area C exceedance, it is possible to encounter multiple area B1 exceedances in one transit if the ITT remains elevated.

If there is an ITT exceedance into area B or C, the respective ITT EXCEED status message will be latched for the remainder of the flight. The message will be removed on engine shutdown when the N2 decreases below 2%.

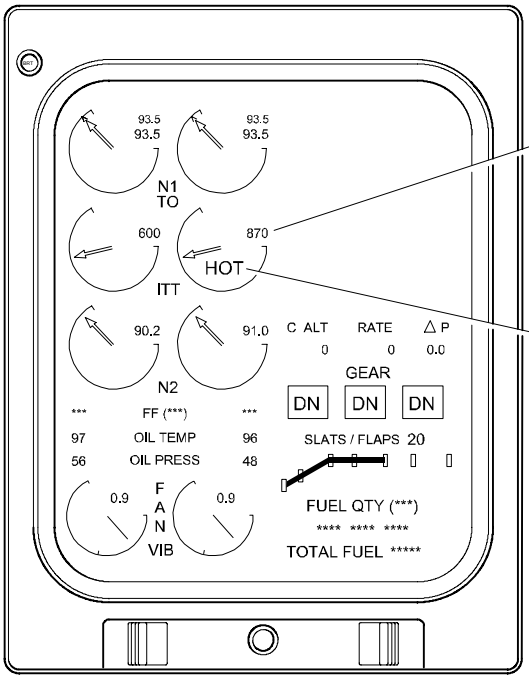

ITT Readout, scale and pointer (green)
Indicates temperature of engine exhaust gases (°C). Readout and pointer turn red when ITT limit is exceeded.

HOT (Icon) (red)
Displayed during a hot start.
When the ITT exceeds 1,460°F. (810°C)
The HOT icon remains until
ITT decreases below 289°F. (143°C)

Primary Page

L or R ITT EXCEED B status (white)
Indicates that category B ITT exceedance has occurred.

L or R ITT EXCEED B1 status (white)
Indicates that category B1 ITT exceedance has occurred.

L or R ITT EXCEED C status (white)
Indicates that category C ITT exceedance has occurred.

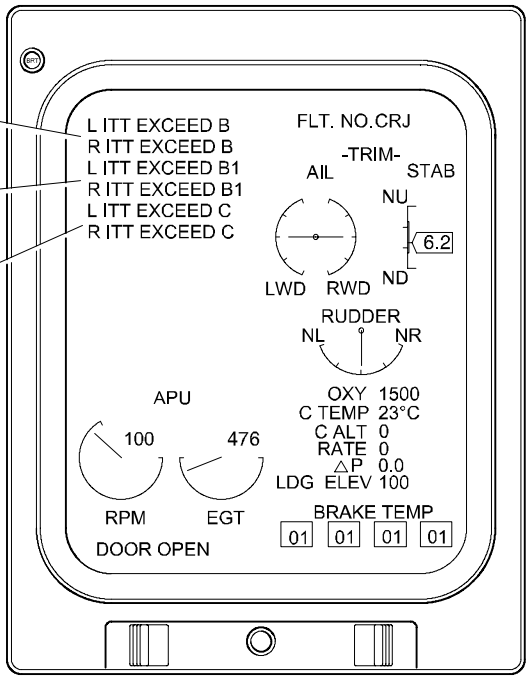

Status Page

Interturbine Temperature (ITT) Monitoring EICAS Indications
Figure 20–55–1

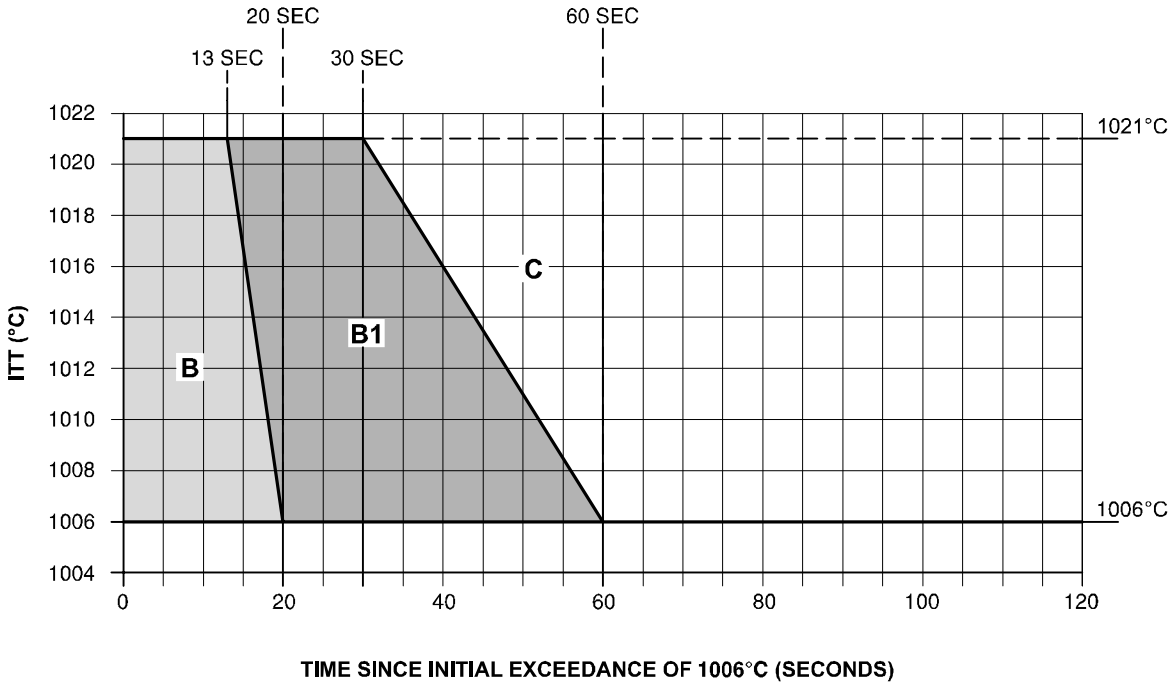

ITT Exceedance Detection

ITT Exceedance Detection
Figure 20–55–2

THIS PAGE INTENTIONALLY LEFT BLANK

1. VIBRATION MONITORING

An engine vibration monitoring computer, mounted in the avionics compartment, monitors the vibration levels in each engine. Each engine provides the computer with signals from an accelerometer, an N1 fan speed sensor and an N2 core speed sensor. The computer processes the signals and provides a vibration velocity amplitude signal to the EICAS for display on the primary page.

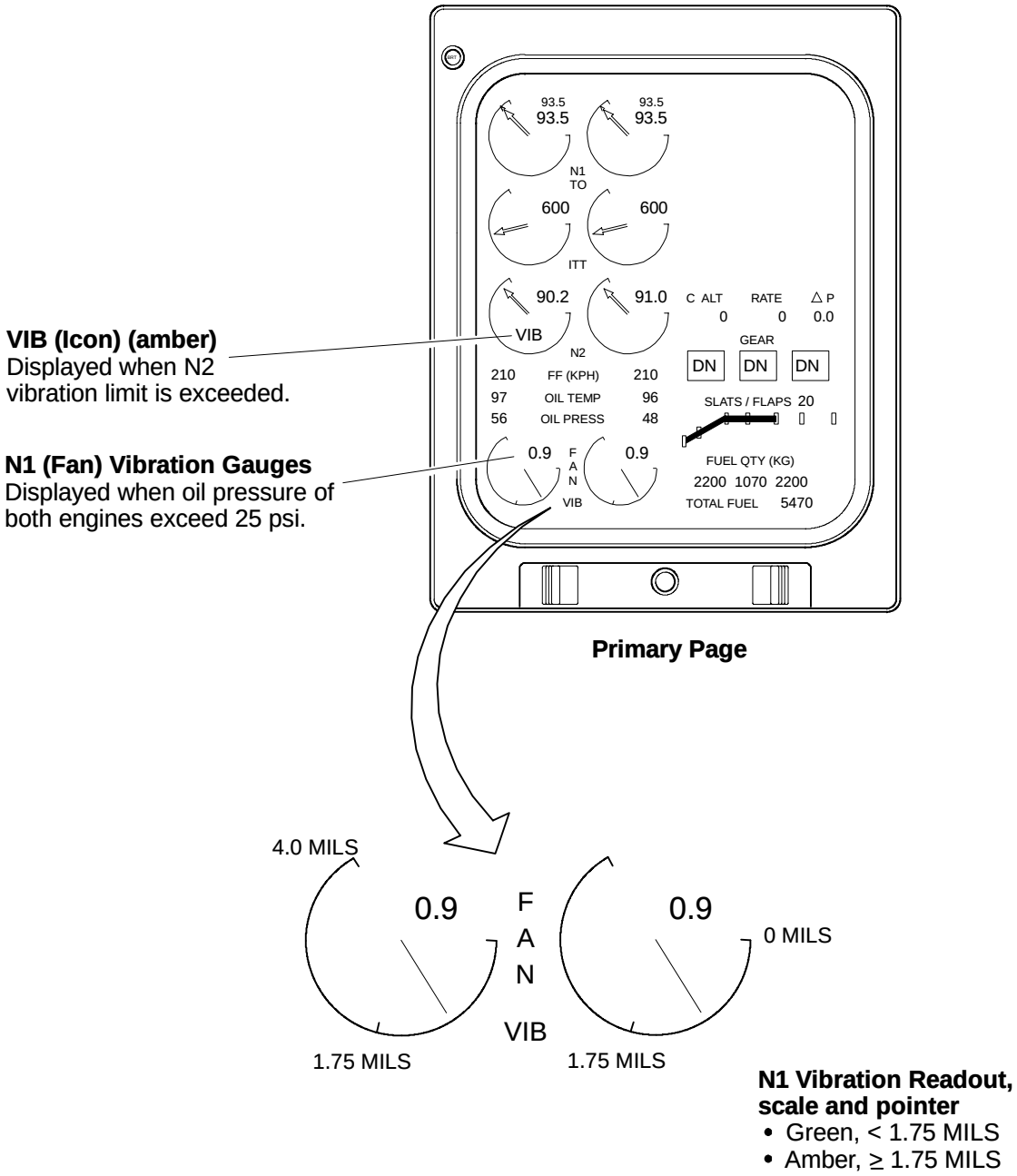

Vibration Monitoring VIB Icon <1001>
Figure 20–60–1

L or R VIB FAULT status (white)
Indicates that respective engine N1 or N2 speed sensor has failed.

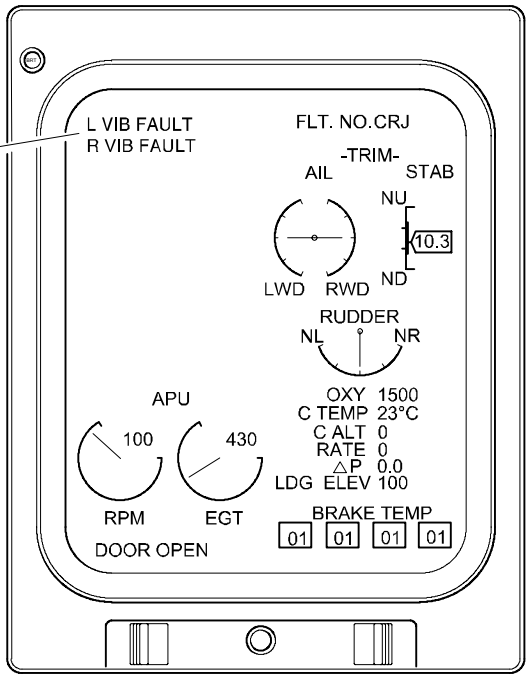

Status Page

Vibration Monitoring
Figure 20–60–2

A. System Circuit Breakers

SYSTEM	SUB-SYSTEM	CB NAME	BUS BAR	CB PANEL	CB LOCATION	NOTES
Vibration Monitor	Computer	ENG VIB MON	AC BUS 1	1	C7	

1. REVERSE THRUST

Reverse thrust assists in stopping the aircraft during landing rollout or during a rejected take-off.

Reverse thrust is accomplished by hydraulic actuators moving the engine translating cowl assemblies aft to block the rearward discharge of fan bypass air. As the translating cowls move rearward, cascade vanes are uncovered to redirect the fan bypass air forward.

The thrust reverser system is armed using the thrust reverser LH and RH switches on the THRUST REVERSER panel and controlled using the thrust reverser levers on the throttle quadrant.

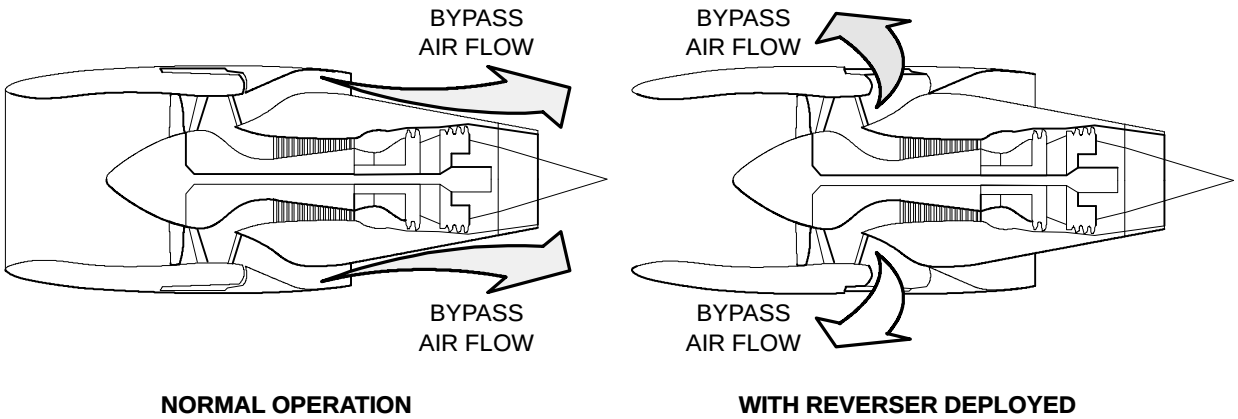

Reverse Thrust – General
Figure 20–70–1

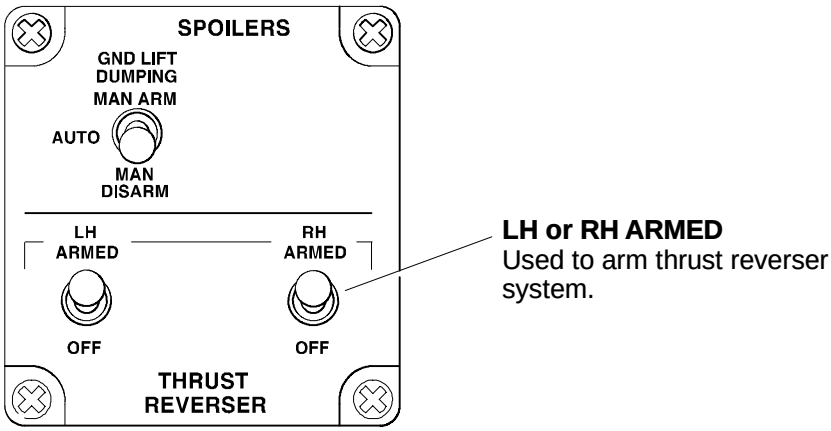

Thrust Reverser Subpanel
Center pedestal

Reverse Thrust – Thrust Reverser Subpanel
Figure 20–70–2

Thrust Reverser Levers
With thrust levers at IDLE, pulling on thrust reverser levers deploys thrust reversers if the following conditions are met:

- Thrust reverser system is armed.
- Aircraft is on ground or wheel spin-up exceeds 20 kt.

Thrust lever solenoids prevent thrust reverser lever movement beyond the deploy position until reverser assemblies are fully deployed.

Once reversers are fully deployed, thrust reverser levers regulate reverse thrust from reverse idle to maximum reverse power.

Returning thrust reverser levers to forward IDLE (fully down) stows reversers.

Once reversers are stowed, thrust levers can be moved forward to increase thrust.

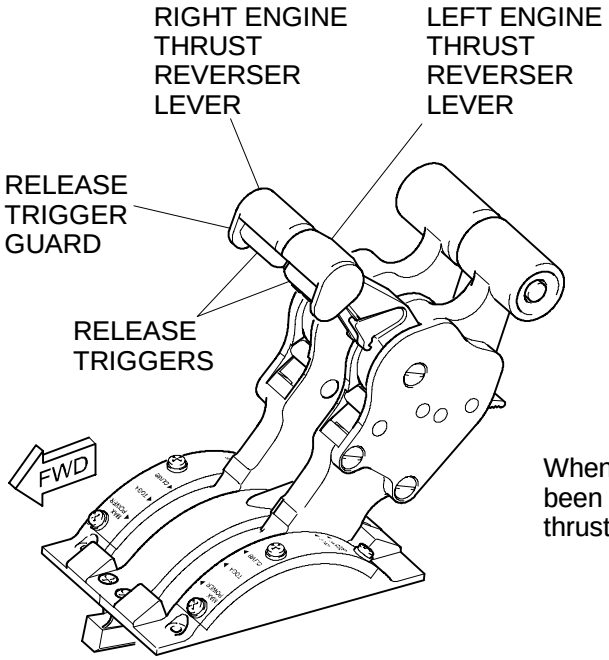

NOTE

When reverse thrust has been selected, forward thrust is locked out.

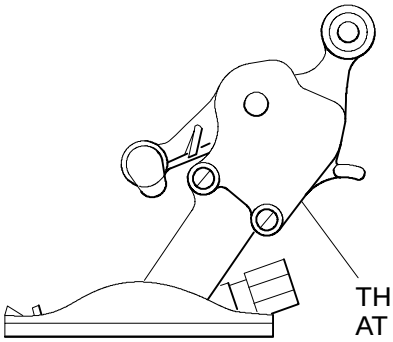

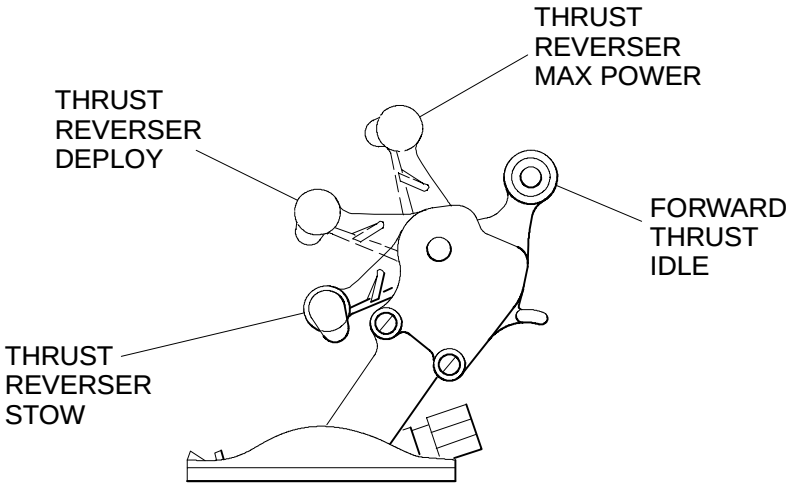

Reverse Thrust – Thrust Reverser Levers
Figure 20–70–3

REV (Icon)
Red – Uncommanded thrust reverser deployment.
Amber – Thrust reverser unlocked.
Green – Thrust reverser deployed.

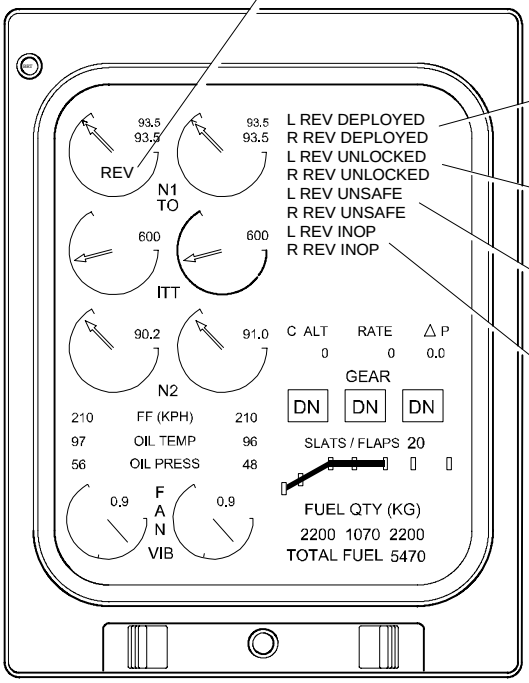

L or R REV DEPLOYED warning (red)
Indicates that respective thrust reverser has not been commanded to deploy and is not stowed and locked.

L or R REV UNLOCKED caution (amber)
Indicates that respective thrust reverser has not been armed and is unlocked.

L or R REV UNSAFE caution (amber)
Indicates respective thrust reverser is unsafe to arm in flight.

L or R REV INOP caution (amber)
Indicates that respective thrust reverser has been armed and is not operational.

Primary Page

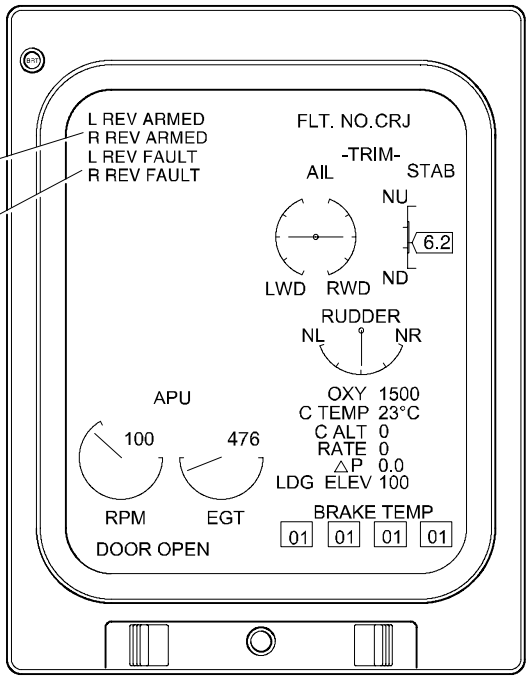

L or R REV ARMED advisory (green)
Indicates that respective thrust reverser has armed.

L or R REV FAULT status (white)
Indicates a fault in respective thrust reverser system.

Status Page

Reverse Thrust – EICAS Indications <1001>
Figure 20–70–4

A. System Circuit Breakers

SYSTEM	SUB-SYSTEM	CB NAME	BUS BAR	CB PANEL	CB LOCATION	NOTES
Reverse Thrust	Actuators	THRUST REV 1	DC ESSENTIAL	2	S5	
		THRUST REV 2			S6	