04.10 APU GENERAL

04.20 FUEL SYSTEM

04.30 OIL SYSTEM

04.40 AIRBLEED SYSTEM

04.50 STARTING

04.60 POWER CONTROL

04.70 GROUND OPERATION SAFETY DEVICE

04.80 CONTROLS AND INDICATING

R 04.90 MAINTENANCE AND EXTERNAL PANELS

GENERAL

The auxiliary power unit is a self-contained unit which makes the aircraft independent of external pneumatic and electrical power supply.

- **On ground** :

  Provides bleed air for starting the engines and to supply
R the air conditioning system of the aircraft.
  Provides electrical power to supply the aircraft network.

- **During Takeoff** :

  Supply of bleed air for air conditioning and wing anti-icing, in this way avoiding engine thrust reduction caused by use of engine bleed air, if optimum aircraft performance is required.

- **In Flight** :

  Provision of back-up power for :
  – electrical system (below 41,000 ft)
  – air conditioning (below 20,000 ft)
  – wing anti-incing (below 20,000 ft).

For APU start and operation only electrical power (batteries, AC emer inverter), and fuel supply at positive pressure are required.

Under normal conditions APU starting is permitted throughout the operating speed range up to 25,000 ft pressure altitude.

APU starting on battery only, is permitted up to 20,000 ft.

The APU fuel consumption with bleed air extracted and generator under load may be averaged at 200 kg/h on ground. In flight consumption is lower than consumption on the ground.

APU RUNNING indication is displayed on the ECAM MEMO page.

APU ENGINE

The basic element of the APU is the gas turbine which delivers mechanical shaft power for driving the accessory gearbox and produces bleed air for engine starting and for pneumatic system supply.

It consists of three main components :

– The power section has a two-stage centrifugal compressor driven by a three-stage axial turbine governed to a constant speed by variation of fuel flow which is controlled by the fuel control unit (FCU) and the electronic control box (ECB).

– The load compressor has a single-stage centrifugal compressor directly driven by the power section and delivers bleed air to the aircraft pneumatic system, controlled by modulating inlet guide vanes.

– The accessory gearbox is directly driven by the power section and carries the fuel control unit, lubrication pumps, AC generator, cooling air fan and starter motor.

AIR INTAKE SYSTEM

The air intake system, consisting of the air intake, diffuser and elbow, ducts the external air to compressor inlet.

An electrically operated flap, is automatically controlled by the landing gear position :

– on ground, with the landing gear down and locked, the R
flap is in the retracted position, the air intake is fully open,

– air intake flap is closed during flight when the APU is not being used.

APU ENGINE

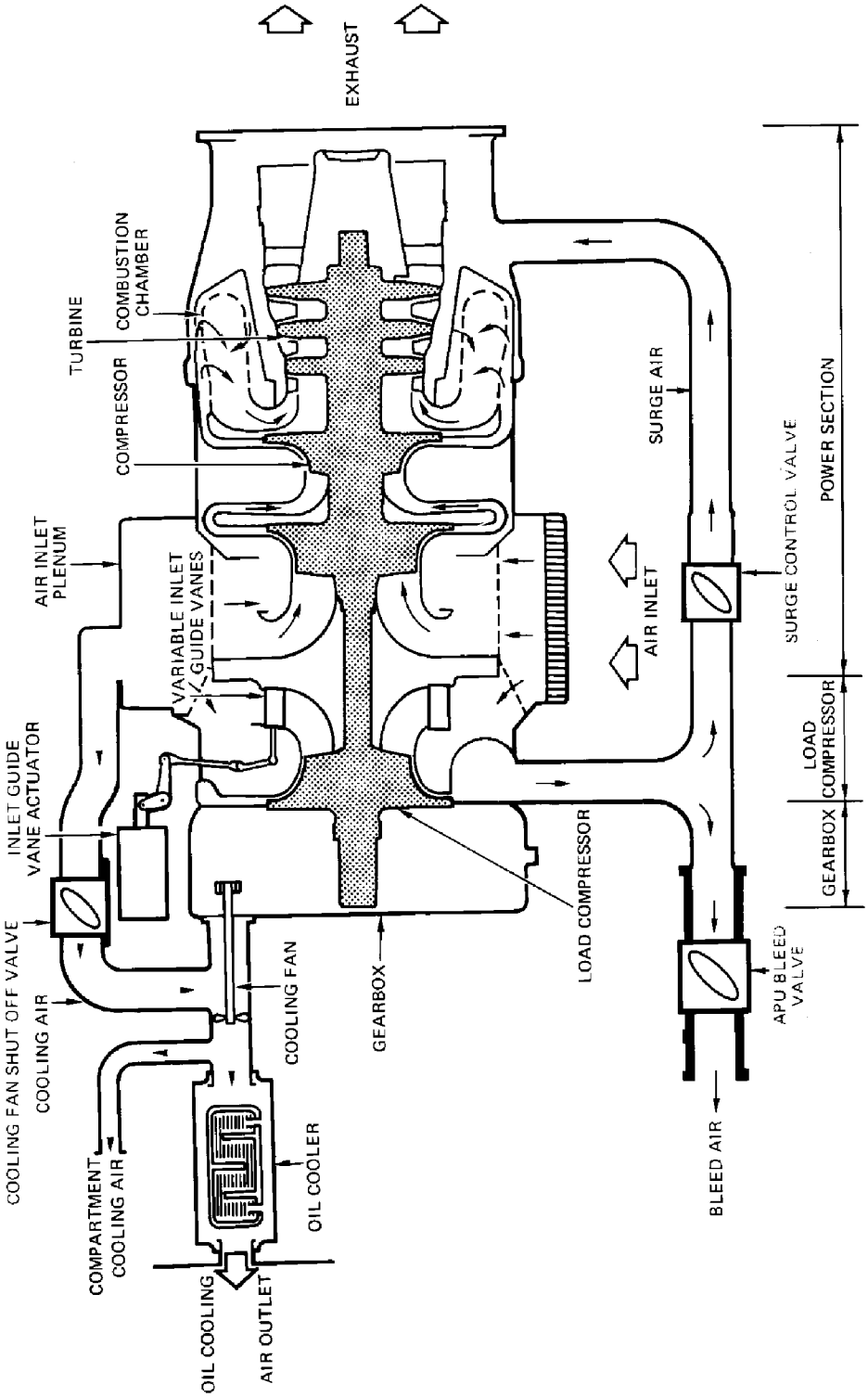

OPS.FCO.B1.0410.002-OO.001

Vers. : All Eng. : All

APU ENGINE – AIR INTAKE

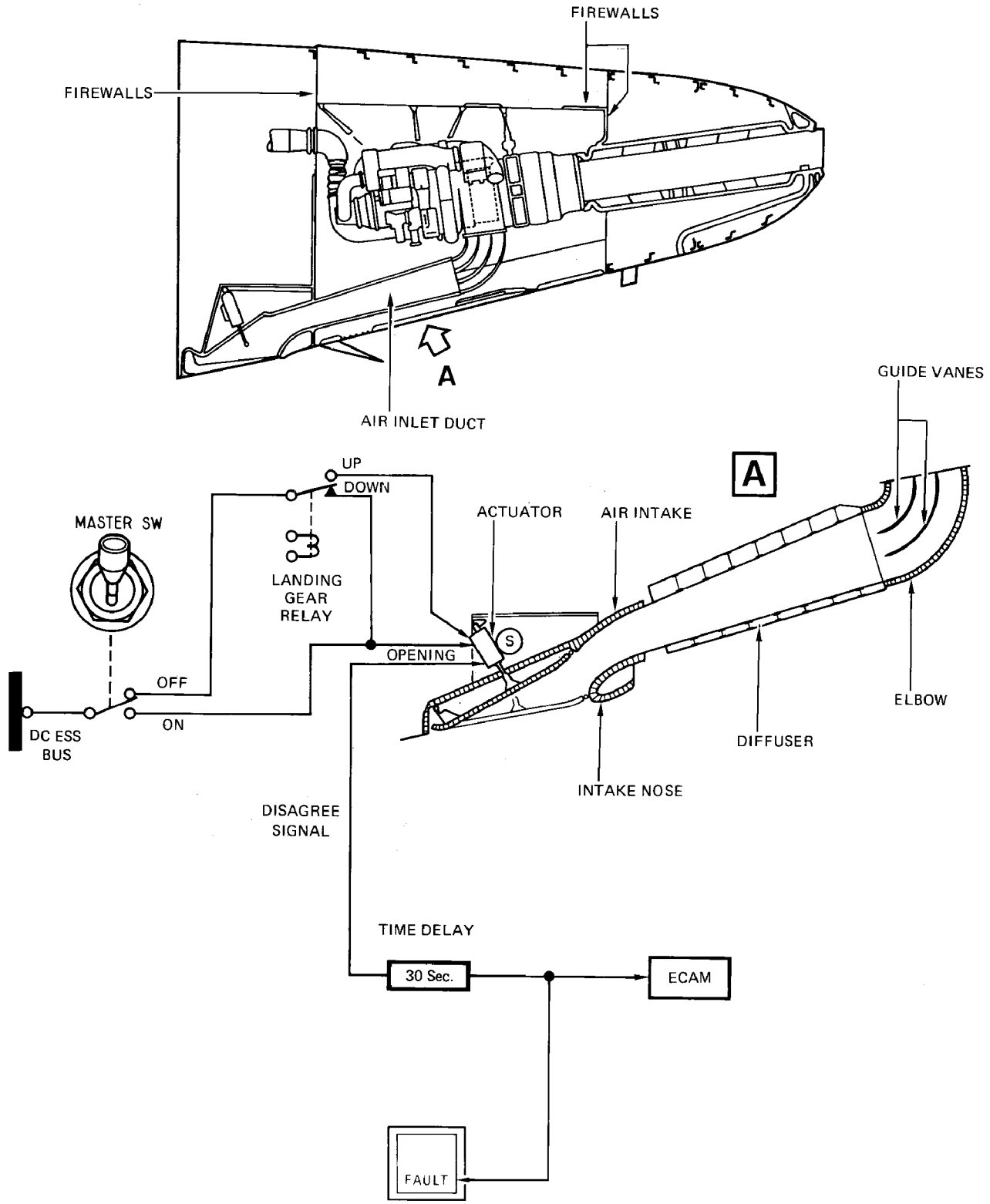

OPS.FCO.B1.0410.003-04.001

Vers. : All

Eng. : All

GENERAL

Normal fuel supply for the APU is from the left wing tanks. To use fuel from the right wing tanks the crossfeed valve must be opened.

The required positive pressure for the APU is available via tank or APU fuel pump.

Fuel flow to the APU is controlled normally by the isolation valve. In case of fire, the fuel supply is interrupted by the fire shut-off valve additionally.

FUEL FEED

A Centrifugal LP pump, installed in the crossfeed line, is electrically supplied by the AC EMER BUS.

When the APU MASTER SW is selected to ON and :

– **FUEL PUMP** pushbutton switch is selected AUTO,

  The pump is activated automatically when the pressure in the supply line is below 22 PSI. When the tank pumps are operating, the APU pump will not operate since tank pump pressure output exceeds 22 PSI.

– **FUEL PUMP** pushbutton switch is OVRD,

  The pump is continuously in operation.

An isolation valve is installed downstream of the LP pump. When the APU is not in operation the valve is closed to prevent the fuel line from being pressurized.

A fire shut-off valve upstream of APU compartment firewall is controlled by the APU FIRE handle (overhead panel) and, on ground by the automatic APU fire extinguishing system. The valve position is indicated by the LP VALVES APU indication on the fuel panel.

The LO PR light in the FUEL PUMP pushbutton switch on the APU panel comes on when the pressure switch downstream the fire shut-off valve senses the fuel pressure below 6 PSI.

APU FUEL CONTROL

High pressure fuel is delivered to the fuel control by the HP pump driven by the accessory gearbox. The fuel control unit operates hydromechanically.

To allow the proper amount of fuel in each operating condition mechanical, pneumatic and electronic signals are processed by the fuel control unit. The metered fuel is injected into the combustor through two manifolds, each with nine atomizing nozzles.

FUEL SYSTEM

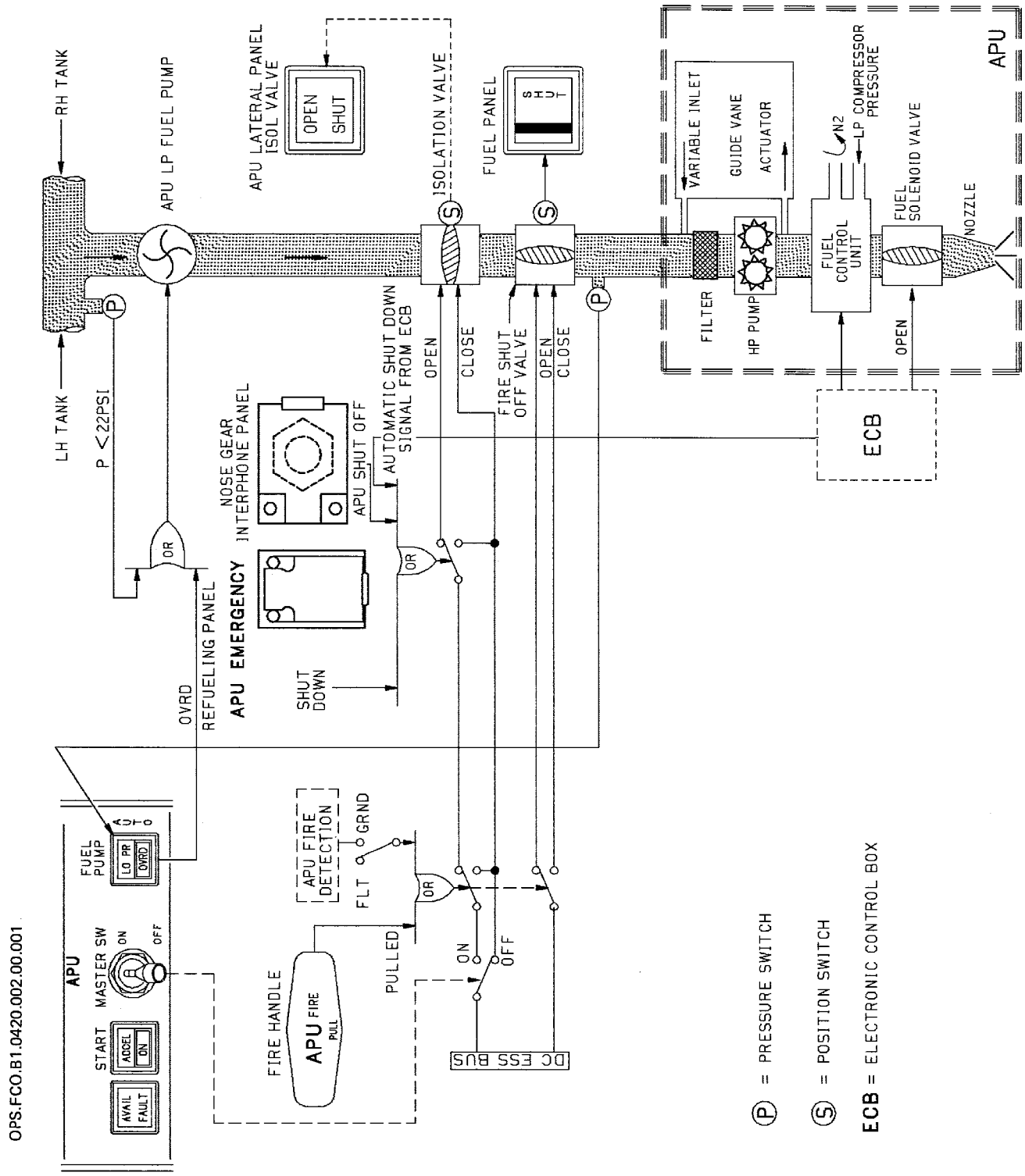

Vers. : All Eng. : All

The APU utilizes an integral independent lubrication system for lubrication and cooling the APU, accessory gearbox and oil cooled generator.

The oil level indicating system consists of an oil level transmitter and indicator. The transmitter is installed into the sump oil level. The indicator is installed on lateral panel and provides an indication of oil level from MIN to FULL divided into four quarters.

Because, during APU running, the oil level in the sump will be less than when the APU is not running, the transmitter has a dynamic and a static operating mode, provided by à 60 % relay.

Vers. : All Eng. : All

OIL SYSTEM

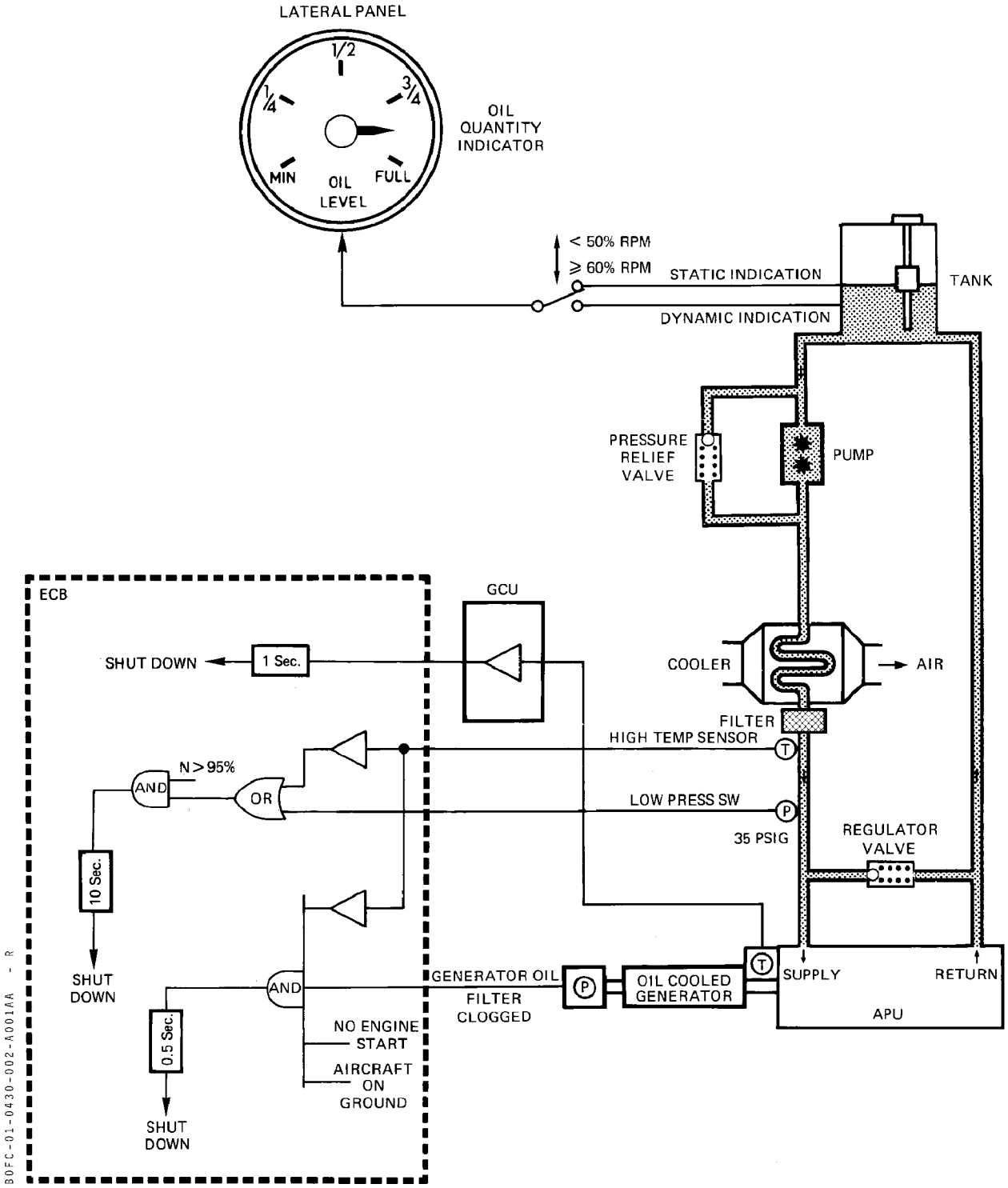
LATERAL PANEL
1/2
1/4
3/4
MIN
OIL LEVEL
FULL
OIL QUANTITY INDICATOR
< 50% RPM
≥ 60% RPM
STATIC INDICATION
DYNAMIC INDICATION
TANK
PRESSURE RELIEF VALVE
PUMP
R
R
ECB
GCU
SHUT DOWN
1 Sec.
COOLER
AIR
FILTER
HIGH TEMP SENSOR
N > 95%
AND
OR
LOW PRESS SW
35 PSIG
REGULATOR VALVE
10 Sec.
SHUT DOWN
AND
GENERATOR OIL FILTER CLOGGED
OIL COOLED GENERATOR
SUPPLY
RETURN
APU
NO ENGINE START
AIRCRAFT ON GROUND
0.5 Sec.
SHUT DOWN
B0FC-01-0430-002-A001AA - R

The fully automatic bleed air system supplies and controls air bleed from the load compressor for the pneumatic system.

The APU bleed air system is separated from the aircraft pneumatic system by a bleed check valve and the APU load control valve, which is a shut-off butterfly valve, spring loaded normally closed when the APU is inoperative, pneumatically powered and controlled by the electronic control box and the APU bleed control switch.

The amount of air supplied by the APU, in accordance with aircraft system demand is determined by the inlet guide vanes position.

The position is in response to an electrical voltage signal from the electronic control box. For extensive bleed air demand during main engine start and wing de-icing the APU speed increases.

The speed is controlled by the electronic control box. A surge valve, installed between the compressor and the APU load control valve, ensures that sufficient air is diverted from the load compressor to maintain an adequate surge margin.

Surge air flow is discharged in the tailpipe. A load compressor inlet temperature sensor monitors the compressor inlet temperature as a means of sensing reverse flow.

An increase of temperature, as a result of reverse flow, will initiate an APU shut down to protect the unit against damage.
Additionally the bleed air system will be monitored via the system CRT.

Vers. : All Eng. : All

BLEED AIR SYSTEM

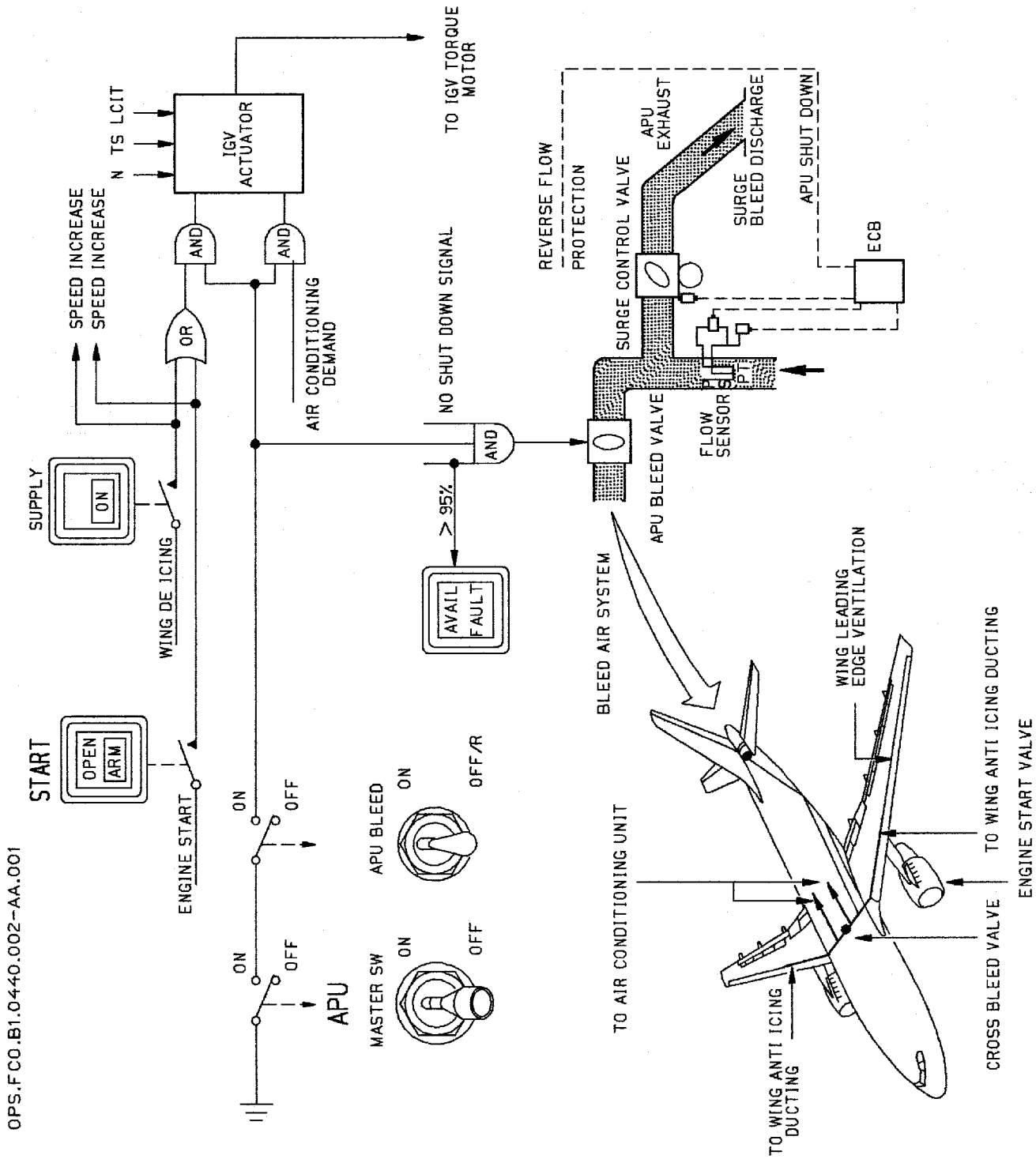

R
R
R

OPS.FCO.B1.0440.002-AA.001

R With landing gear DOWN, the APU air intake flap is
R continuously opened.
R – Select APU MASTER switch ON :
R • with landing gear UP, APU air intake flap opens.
R • APU FUEL PUMP pushbutton switch LO PR light is off.
R – Press the APU START pushbutton switch to initiate the automatic start sequence :

Then the automatic start sequence begins :

– The white ON light in the START pushbutton switch comes on.

– The start output of the ECB energizes the starter motor

– When 7 % rpm are reached
  • the blue integrated ACCEL light comes on
  • the ECB energizes the igniters, and initiates the fuel supply.

– At 50 % rpm :
  • the starter motor is switching off
  • the START p/b switch drops out and the white ON light goes off.

– The APU continues to accelerate up to the normal regulated speed.

– At 95 % rpm :
  • the blue AVAIL light comes on
  • the blue ACCEL light goes off.

Note : The start is inhibited as long as the air intake flap is closed.
After an AUTO shutdown the MASTER switch has to be selected OFF then ON for resetting before a new start attempt.

STARTING SYSTEM

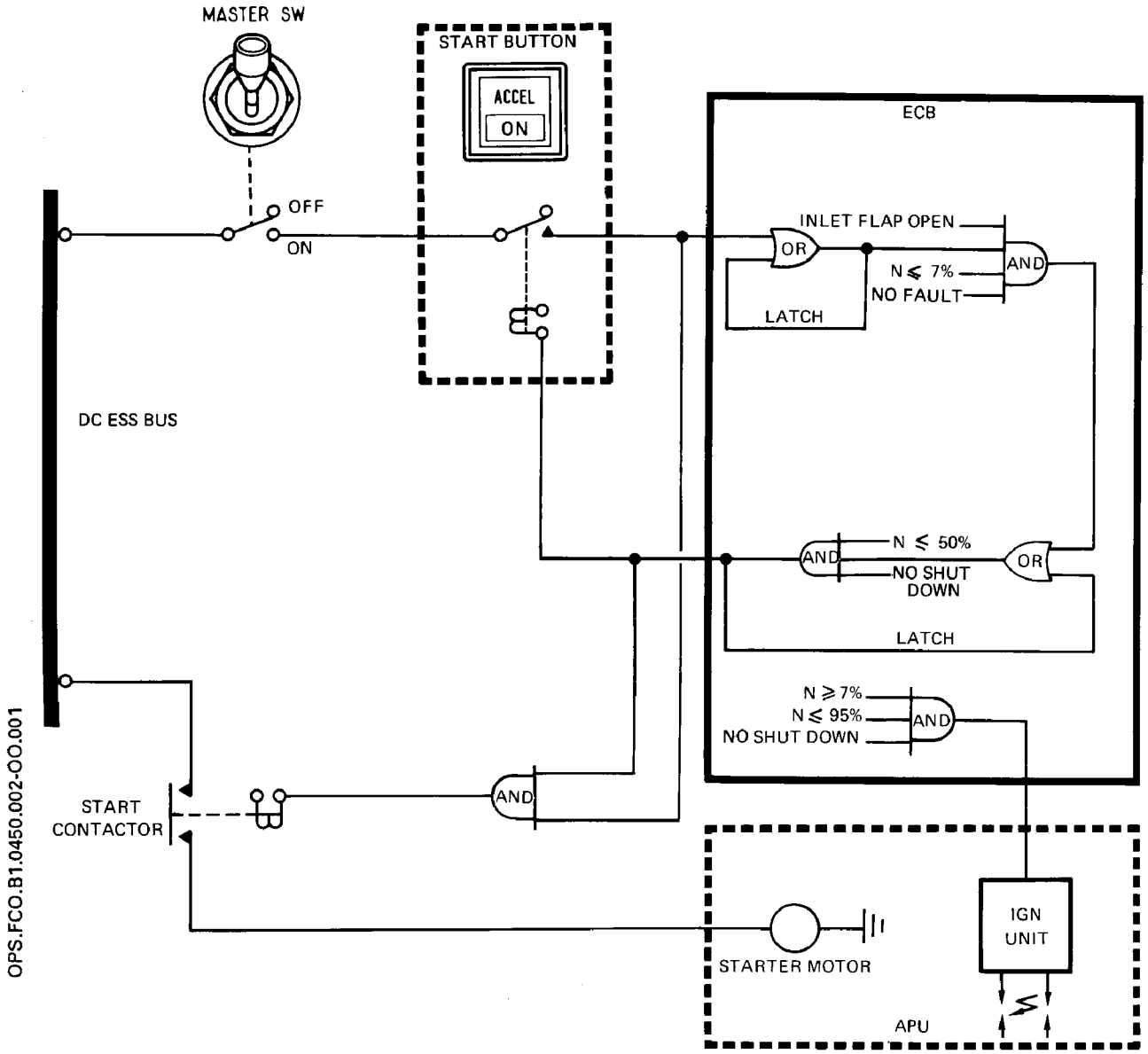

Vers. : All Eng. : All

R The electronic control box (ECB) is primarily a full authority digital electronic APU-controller that performs the bulk of the APU system logic for all modes of engine operation including self-testing, shutdown protection and continuous monitoring of essential APU parameters as follows :

- Sequence of start
- Monitoring of start
- Monitoring of speed (RPM)
- Monitoring of operating temperature (EGT)
- Sequence of stopping
- Automatic stop
- Monitoring of bleed air

Speed is monitored according to bleed air demand :

DEMAND	CONDITION	% RPM
NO LOAD	APU BLEED SWITCH OFF/RESET	100 %
ENGINE START (MES)	START P/B SWITCH SELECTED ON	101.4 %
AIR COND	APU BLEED SWITCH SELECTED ON	100 %
WING ANTI-ICE	WING ANTI-ICE SUPPLY P/B SWITCH SELECTED ON	102.5 %

AUTO SHUT DOWN LOGIC

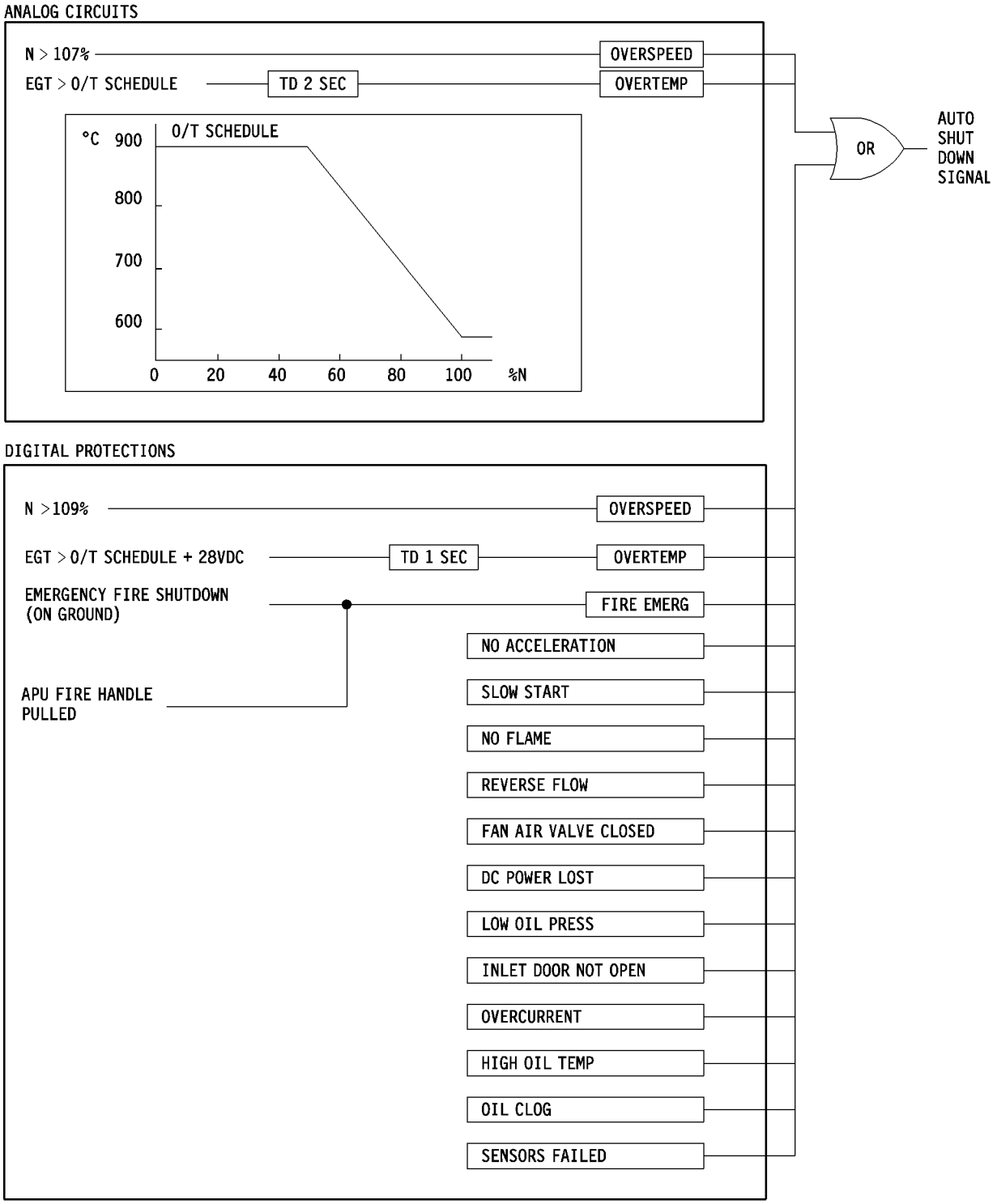

To permit APU ground operation without constant supervision provisions for automatic fire extinguishing are installed.

If an APU fire is detected by the fire detection circuits, simultaneously :

- the cockpit APU fire warnings, a red light on the nose gear interphone panel and a horn in the nose gear bay are activated,
- the automatic APU shutdown is initiated,
- the fuel fire shut-off valve closes.
- the isolation valve closes.

After 10 seconds delay :

- the fire extinguisher bottle is discharged.

The automatic shutdown is confirmed and the external horn is silenced by :

- pressing the APU EMERGENCY SHUTDOWN pushbutton on the Refuel/defuel panel, or
- pressing the APU SHUT-OFF pushbutton on the nose gear interphone panel, or
- pulling the APU FIRE handle on the overhead panel (will also silence CRC).

The remaining visual and aural warnings are cancelled when the fire is extinguished.

The pushbutton on the refuel/defuel panel and the pushbutton on the nose gear interphone panel also serve for APU shutdown from the exterior in other emergencies, if required.

Note : As soon as the DC ESS BUS is no more energized, the APU is shutdown. R

Mod. : 4540

GROUND OPERATION SAFETY DEVICE CONTROL LOGIC

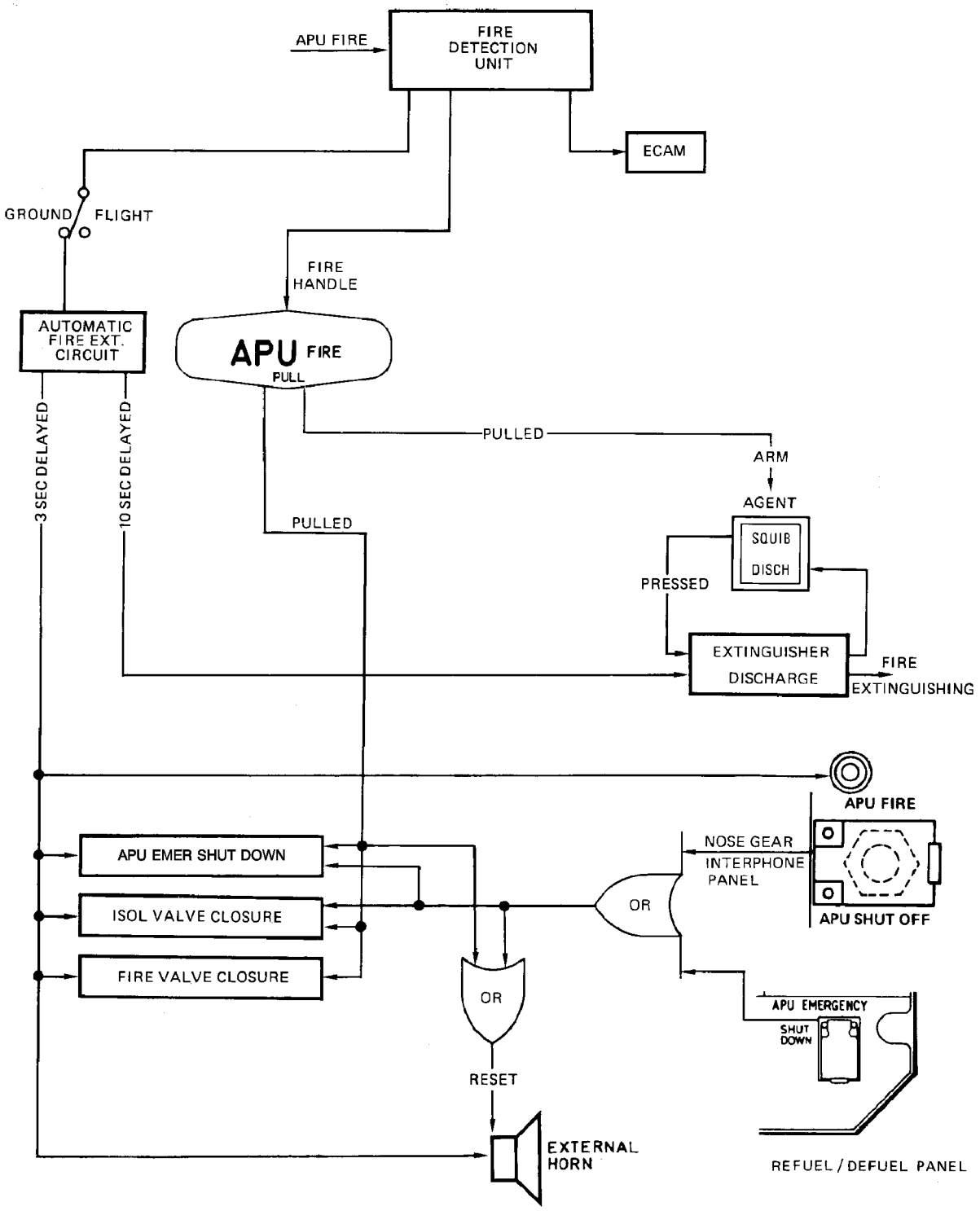

A. APU PANEL

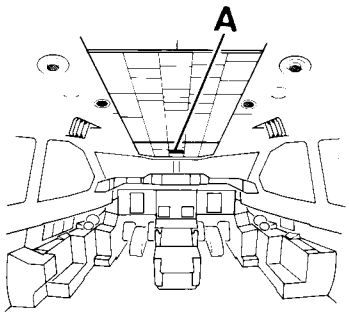

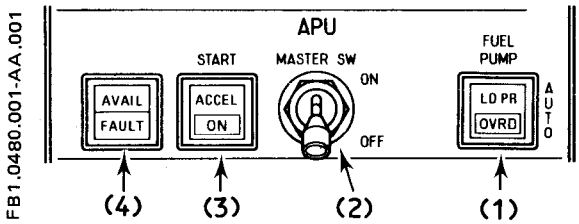

(1) FUEL PUMP Pushbutton-Switch

Selects the operation mode of the LP fuel pump.

- **AUTO (P/B switch pressed in)**

  The LP fuel pump operates automatically when the fuel pressure upstream of the pump is below 22 PSI provided that MASTER SW is selected ON and AC EMER BUS is supplied.

- **LO PR**

  The light comes on amber accompanied by ECAM when the APU MASTER SW is selected ON and the APU fuel pressure is below 6 PSI.

- **OVRD (P/B switch released out)**

  The LP fuel pump operates continuously provided that AC EMER BUS is supplied and MASTER SW is selected ON. OVRD white light comes on.

(2) MASTER SW

Controls basic power supply for APU starting, control and protection.

- **ON**

  Control and protection systems are energized. The fuel isolation valve opens, the LP fuel pump is armed or activated.

  The starting system is armed.
  In flight if gear is up the air intake flap opens.

  Note : When MASTER SW is selected ON and RPM > 95 % the indication APU RUNNING is displayed on the MEMO page of the warning display.

- **OFF**

  APU is shutdown. (If the APU bleed valve was open when selecting OFF, the shutdown is delayed for 60 seconds to allow for a cooling period).
  The fuel isolation valve closes. LP fuel pump, starting control and protection systems are de-energized.

  When gear is up the air intake flap closes after 60 seconds when the RPM is below 7 %.

  Note : When selected OFF, shutdown is performed as an overheat signal then, EGT overlimit is displayed on ECAM.

(3) START Pushbutton-switch

Initiates the starting sequence if the MASTER SW is selected ON.

- **ON (P/B switch pressed in.)**

  The starting sequence is initiated provided that the air intake flap is open. The ON light comes on white.
  The P/B switch remains latched. It is automatically released between 38 and 55 % RPM and the white ON light extinguishes. R

- **OFF (P/B switch released out)**

  Starting sequence is not initiated.

- **ACCEL**

  The light comes on blue when 7 % RPM are reached. It R
  extinguishes when 95 % RPM. R

(4) AVAIL/FAULT Lights

- **AVAIL :**

  The light comes on blue when the RPM reaches 95 % (the APU is ready to load).

- **FAULT**

  The light comes on amber accompanied by ECAM when :

  . RPM is below 7 % and the air intake flap is not open within 30 seconds.

  . An APU automatic shutdown occurs, except when it is initiated by the MASTER SW.

SYSTEM DISPLAY

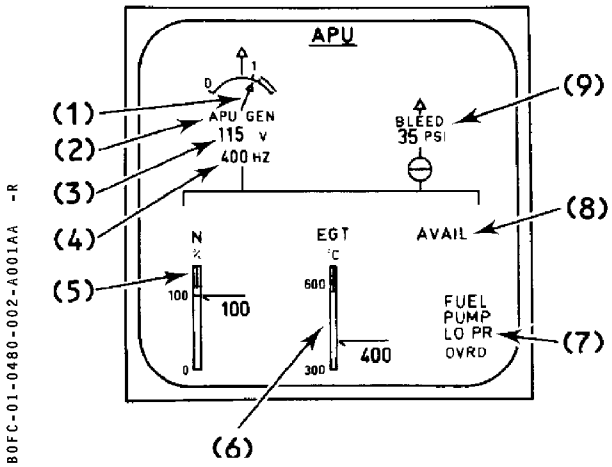

(1) APU GEN Load Indication (green)

The APU GEN load is given in percent.
Above 110 %, the indication becomes amber.

The indication is replaced by a triangle (white) when the APU MASTER SW is selected OFF.

(2) APU GEN Indication (white)

The indication becomes amber when APU GEN P/B R switch is selected OFF/R with the APU MASTER SW R selected ON.

(3) APU GEN Voltage Indication (green)

R The APU GEN Voltage is displayed when the APU MASTER R switch is ON.

Below 110 V the indication becomes amber.

Above 120 V the indication becomes amber.

The indication is replaced by OFF (white) when APU GEN P/B switch is selected OFF/R.

R

(4) APU GEN Frequency Indication (green)

The APU GEN frequency is displayed in Hertz when the R APU MASTER switch is on and APU GEN pushbutton R selected ON. R

Below 390 Hz the indication becomes amber.

Above 416 Hz the indication becomes amber.

R

(5) APU N% Indication (green)

The APU speed (RPM) is displayed in percent on a vertical scale.

Above 107 % the indication becomes amber.

(6) APU EGT Indication (green)

The APU Exhaust Gas Temperature is displayed in ° C on R a vertical scale.

Above 540° C the indication flashes.

Above 585° C the indication becomes amber.

Note : When the APU MASTER SW is selected OFF, the APU shut down is performed via the auto-shut down circuit for test purpose, and a full scale EGT deviation is momentarily displayed, independently of the real EGT value.

(7) APU FUEL PUMP Indication (white)

- FUEL LO PR PUMP (amber) is displayed when a fuel low R pressure is detected.
- FUEL PUMP OVRD (green) is displayed when FUEL R PUMP pushbutton switch is selected OVRD.
- There is no indication displayed in normal operation or when APU MASTER SW is selected OFF.

(8) AVAIL indication (cyan)

The indication comes on when APU RPM is greater than 95 % and APU MASTER SW is selected ON.

(9) APU BLEED Pressure indication (green)

The APU BLEED pressure is displayed in PSI when the R APU BLEED valve is open. R

Above 57 PSI the indication becomes amber.

R

WARNING LOGIC

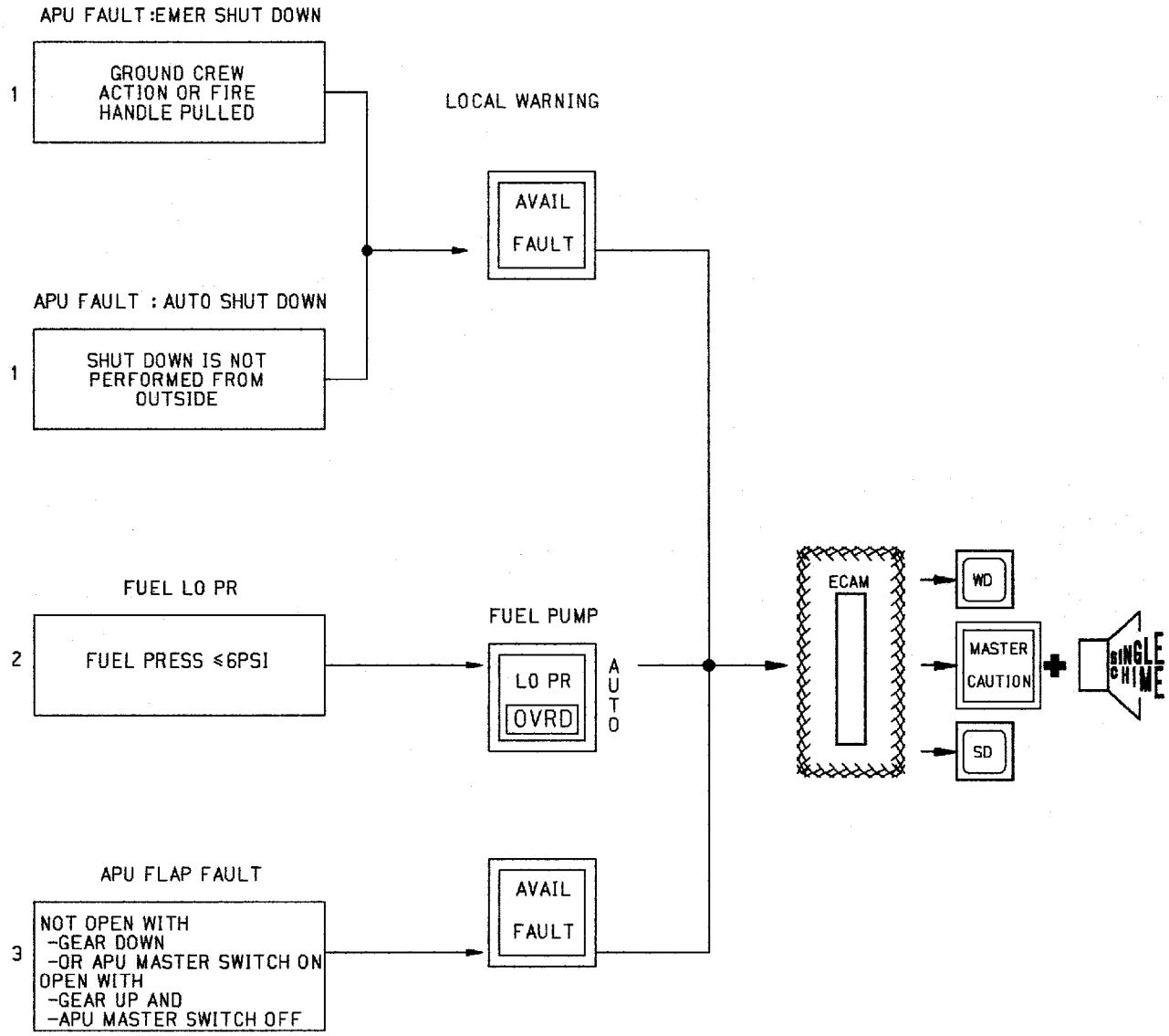

R
R
R
R
R
R

AUTOMATIC FLIGHT PHASE INHIBITION

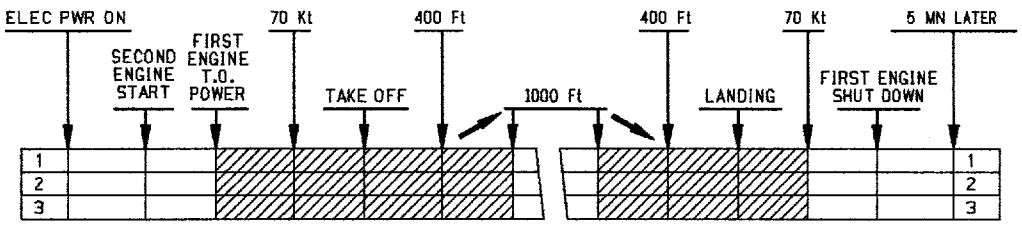

- OPS.FCO.B1.0480.003-AA.020

Mod. : 5051

A. APU PANEL

MAINTENANCE PANEL

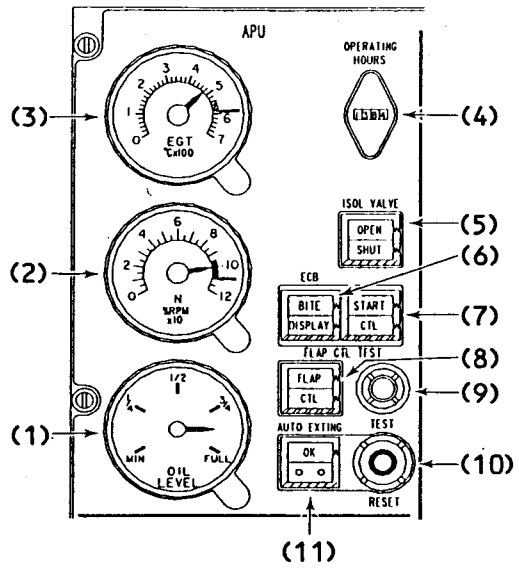

(1) OIL QTY Indication

R Indicates the oil level.

(2) RPM Indication

The RPM is indicated in percent of nominal speed. Active when MASTER SW is selected ON, de-activated 60 sec. after the APU speed is below 7 % RPM.

(3) EGT Indication

Exhaust gas temperature at turbine exit is indicated in °C. Active when MASTER SW is selected ON, de-activated 60 sec. after the APU speed is below 7 % RPM.
R

(4) OPERATING HOURS

The indicator totalizes the APU operating time when above 95 % RPM.

(5) ISOL VALVE Indication

Position of the fuel supply isolation valve is indicated by OPEN or SHUT white lights.

(6) ECB – BITE DISPLAY M.F.A.

Indicates ECB faults leading to an APU automatic shutdown. R

(7) START CTL M.F.A.

Indicates start contactor failures. R

(8) FLAP CTL M.F.A.

Indicates air intake flap malfunctions. R

(9) FLAP CTL TEST Pushbutton

When pressed in for 30 sec. checks air intake flap sequence.

(10) AUTO EXTING TEST RESET Switch

Test is to be performed on ground only.

- **TEST**

  Switch must be held during test. MASTER SW must be selected ON.
  APU FIRE warning, auto extinguishing and shutdown circuits are tested. Sequence duration is 10 seconds.
  The OK white light comes on to indicate a successful test.
  Note : If in operation, the APU shutdowns.

- **RESET**

  Test circuit is reset.

- **Neutral**

  Test circuit not energized.

(11) AUTO EXTING – OK Light

Comes on white when auto extinguishing sequence is completed and test result is positive.

EXTERNAL CONTROLS

The APU external controls are provided for exterior fire
R warning and emergency shutdown (See FIRE
R PROTECTION Chapter).