DESCRIPTION

The aircraft is equipped with two Pratt and Whitney PW 125B turboprop engines, which are enclosed, in wing-mounted nacelles. Each engine drives a Dowty Rotol six-bladed reversible-pitch constant-speed propeller. The engine is essentially a twin-spool turbojet combined with a free power-turbine assembly, which drives the reduction gearbox and propeller via a third concentric shaft.

Engine layout

Air intake

The air intake is located below the propeller spinner. The intake has an anti-icing system.

Combustion section

The combustion section comprises an annular combustion chamber, fourteen fuel nozzles, and two igniters. Fuel control is through combined mechanical and electronic control systems.

High pressure spool

This spool comprises a centrifugal compressor and a single stage axial turbine. HP-spool rpm (NH) is governed by fuel metering. The spool drives the HP fuel pump and the lubrication oil pumps.

Low pressure spool

This spool comprises a centrifugal compressor and a single stage axial turbine. The LP spool is ungoverned; it is free to adapt itself to the operating conditions. LP-spool rpm is designated NL. To ease the gas flow paths and to minimize the gyroscopic moment, the LP spool rotates in a direction opposite to the HP spool and power-turbine shaft.

Power turbine

The two-stage axial power turbine drives the propeller via the reduction gearbox. The propeller shaft line is set above the engine shaft centerline. Propeller rpm is designated NP. The reduction gearbox also drives an integrated drive generator, a hydraulic pump, a propeller-pitch-control oil pump, a propeller overspeed governor, and the NP indicator.

Lubrication

Lubrication of both the engine and the gearbox is obtained by a single oil system. A high-pressure oil pump, driven by the HP spool, distributes the oil. The oil is returned to the tank by scavenge pumps. An oil cooler is positioned in an air duct below the engine air intake. Two other small heat exchangers are incorporated in the engine-fuel system.
Engine oil is also used for propeller pitch control.

Functional diagram

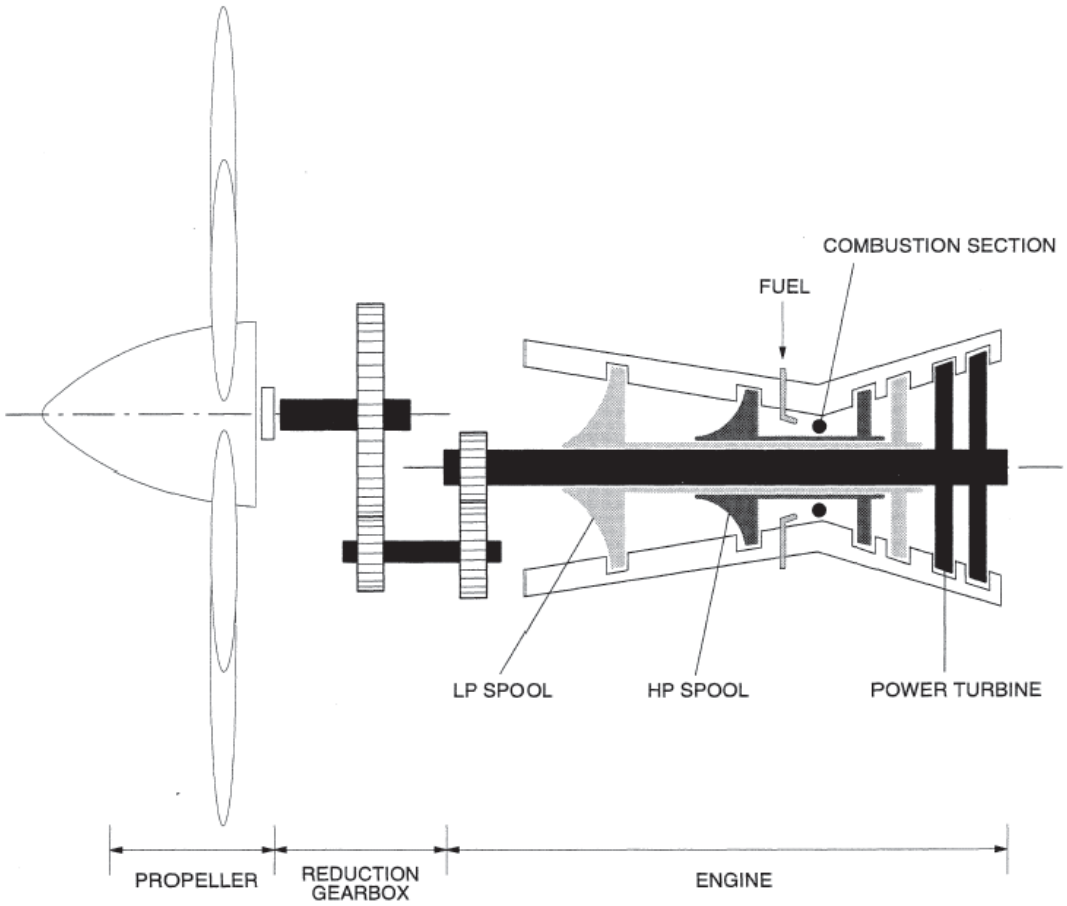

STARTING AND IGNITION

Starting

Controls and indicators are located at the ENGINE panel.
The engine is equipped with an electrical starting system. Electrical power is initially obtained from APU/external power and/or from the batteries.
The start control unit is armed to operate when the START pushbutton is depressed to ON. The start control unit initiates the starting cycle when commanded by the engine selector. The starter motor rotates the HP spool. Both fuel and ignition are supplied when the FUEL lever is set to START. At approximately 46 per cent NH, the starter motor and the ignition are cut off automatically.

Ignition

Each engine ignition system consists of two ignition circuits. Only one igniter is activated during engine start on the ground and during continuous ignition. Continuous ignition is obtained by depressing the IGNITION pushbutton to ON. When continuous ignition is selected for either engine, two ENG IGN lights, located at the glare shield illuminate. If in flight NH drops below 60 per cent, and the propeller is not feathered, both igniters will be automatically activated. Both igniters are manually activated during air start, when both IGNITION pushbutton and START pushbutton are depressed to ON.

NOTE: Ignition is possible only when the FUEL lever is in the START or OPEN position.

Functional diagram

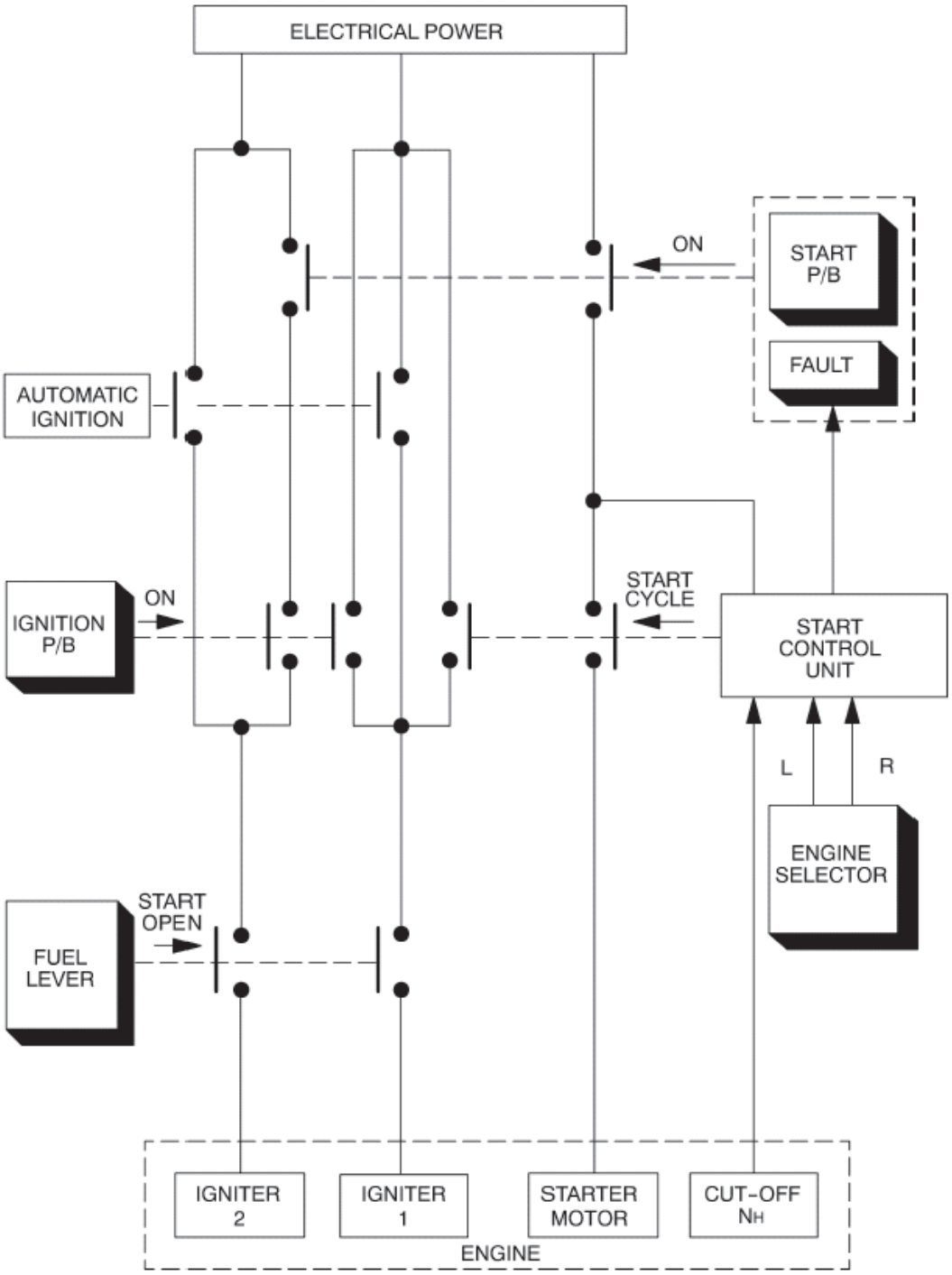

Controls and indicators

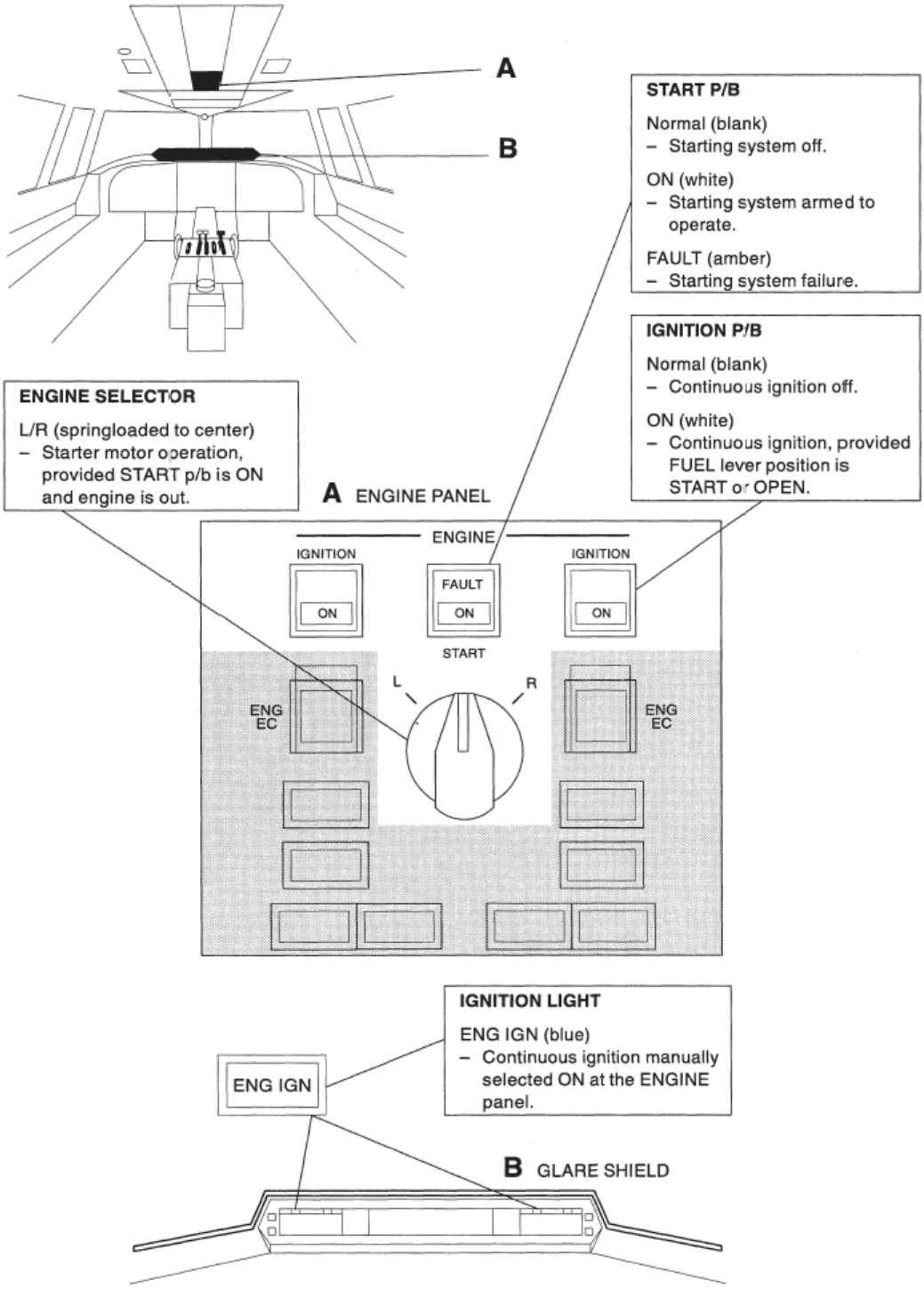

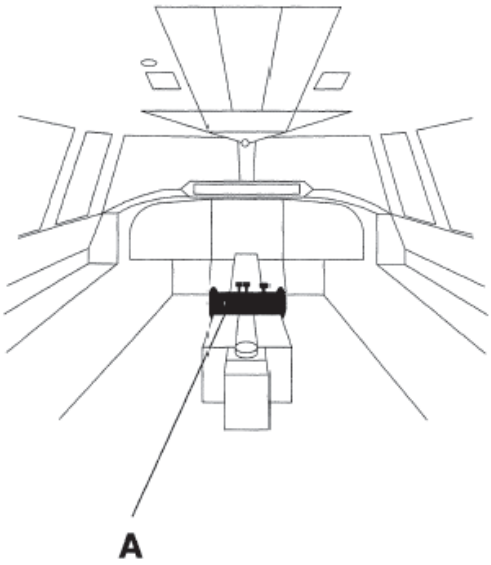

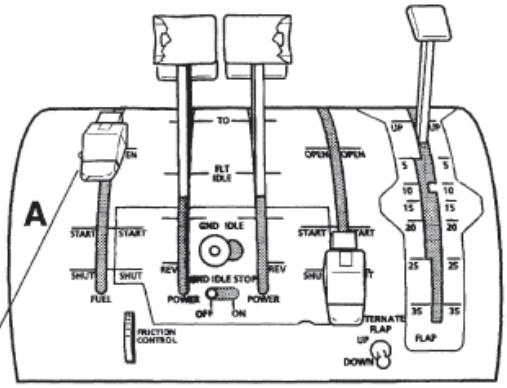

FUEL LEVER

SHUT
- No fuel supply.
- No ignition.

START/OPEN
- Fuel supply.
- Ignition available:
  - During starter motor operation or,
  - With IGNITION p/b ON.

Alerts

CONDITION(S) / LEVEL		AURAL	MWL/MCL	CAP	LOCAL
START FAILURE	1				START FAULT ON

ENGINE CONTROL

The engine control system is basically a mechanical fuel metering system with electronic supervision by the Engine Electronic Control unit (ENG EC).

Engine fuel

From the pumps in the collector tank fuel flows to the engine fuel system via a fire shut-off valve located just aft of the firewall.
For each engine the fuel system consists of:

- A fuel filter and heater assembly. Lights to indicate a low fuel temperature and a high fuel temperature are located at the ENGINE panel.
- An engine-driven high-pressure pump and fuel filter. A light to indicate a clogged filter is located at the ENGINE panel. A clogged filter is bypassed automatically.
- A Mechanical Fuel Control unit (MFC). The MFC provides the fuel metering from the pump to the engine. Incorporated in the MFC is a fuel shut-off valve, operated by the FUEL lever.
- An oil cooler.
- A fuel flow transmitter. The fuel flow transmitter, located between the MFC and the fuel nozzles, sends a signal to the fuel flow/aircraft weight indicator. See subsection INSTRUMENTS.
- Fourteen fuel nozzles.

Fuel metering

Basically the fuel flow through the MFC is set by the POWER lever. POWER lever controlled fuel flow, which sets NH, is adjusted by the ENG EC to stabilize NH and/or the target torque. See below. In case the ENG EC is switched off, control of NH will be maintained with a governor. Fuel metering by the MFC also depends on:

- Propeller overspeed. If NP exceeds 108 per cent, the propeller overspeed governor will reduce the fuel flow.
- Propeller underspeed. In case of a propeller underspeed, the ENG EC commands the MFC to increase fuel flow.
- Autofeather condition. If a propeller autofeathers, the ENG EC on the live engine will command the MFC to increase fuel flow (Automatic Power Reserve, (APR)).

Electronic control

ENG EC authority to adjust the fuel flow is based on POWER lever position, NH, ambient conditions, and engine rating. Controls and indicators are located at the ENGINE panel. Degraded performance of the ENG EC is indicated by an ENG EC DEGRADED light. A complete ENG EC failure is annunciated by a FAULT light at the ENGINE panel and an ENG EC light at the CAP. At small power lever angles, automatic switching to MAN (manual) occurs. In this case the FAULT and MAN lights illuminate simultaneously. In case of an FAULT light only, manual engine control can be selected by retarding the respective POWER lever or by depressing the respective ENG EC pushbutton. An other function of the ENG EC is to calculate the maximum available torque corresponding with the selected engine rating.

Engine rating

Engine ratings are used by the ENG EC to control fuel flow and to calculate target torque, and by the Propeller Electronic Control unit (Prop EC) to control propeller speed (see subsection PROPELLER CONTROL).

The following engine ratings can be selected:

• Go-around	GA	2500 SHP
• Take-off	TO	2250 SHP
• Maximum continuous torque	MCT	2150 SHP
• Flex take-off	FLX	2088 – 2250 SHP (depending on the selected temperature).
• Climb	CLB	2088 SHP
• Cruise	CRZ	1725 SHP

NOTE: FLEX (FLX) is either not used or not installed

The performance values as given above are maximum rated values. The maximum available torque corresponding with the selected engine rating is indicated by the target bug at the torque indicator. This rated torque is dependent on ambient or selected temperature. The pilot may have to adapt the actual torque to the target torque by setting the POWER lever.
The Engine Rating Panel (ERP), located at the center main instrument panel, provides selection of the following engine ratings TO, GA, CLB, CBZ, MCT. The GA rating can also be selected, in flight only, via the go-around button(s) on the power lever(s). The GA rating is selected automatically upon touchdown. Approximately 16 seconds after touchdown, provided the aircraft is still on the ground, the TO rating is selected automatically. Automatic selected ratings can be cancelled manually by selection of another rating at the ERP.

NOTE:
- In case of an ERP failure, indicated at the CAP, calculated torque is not available and NP demand will be 100 percent.
- FLEX (FLX) is either not used or not installed.

Ground idle stop

A selectable GND IDLE STOP mechanism is installed on the pedestal to prevent selection of the power levers to the REV position during a rejected take-off. Due to propeller pitch change characteristics the propeller pitch rate is reduced when large changes are required. This is noticeable in a rejected take-off with the power levers selected from the T/O detent to the REV position. During a rejected take-off the stopping distance with the power levers selected in the REV position may require more distance than with the power levers selected in the GND IDLE position.

NOTE: The ground idle stop is NOT used for landing as the propeller pitch change characteristics are not restrictive. The use of reverse during landing is unrestricted.

Functional diagram

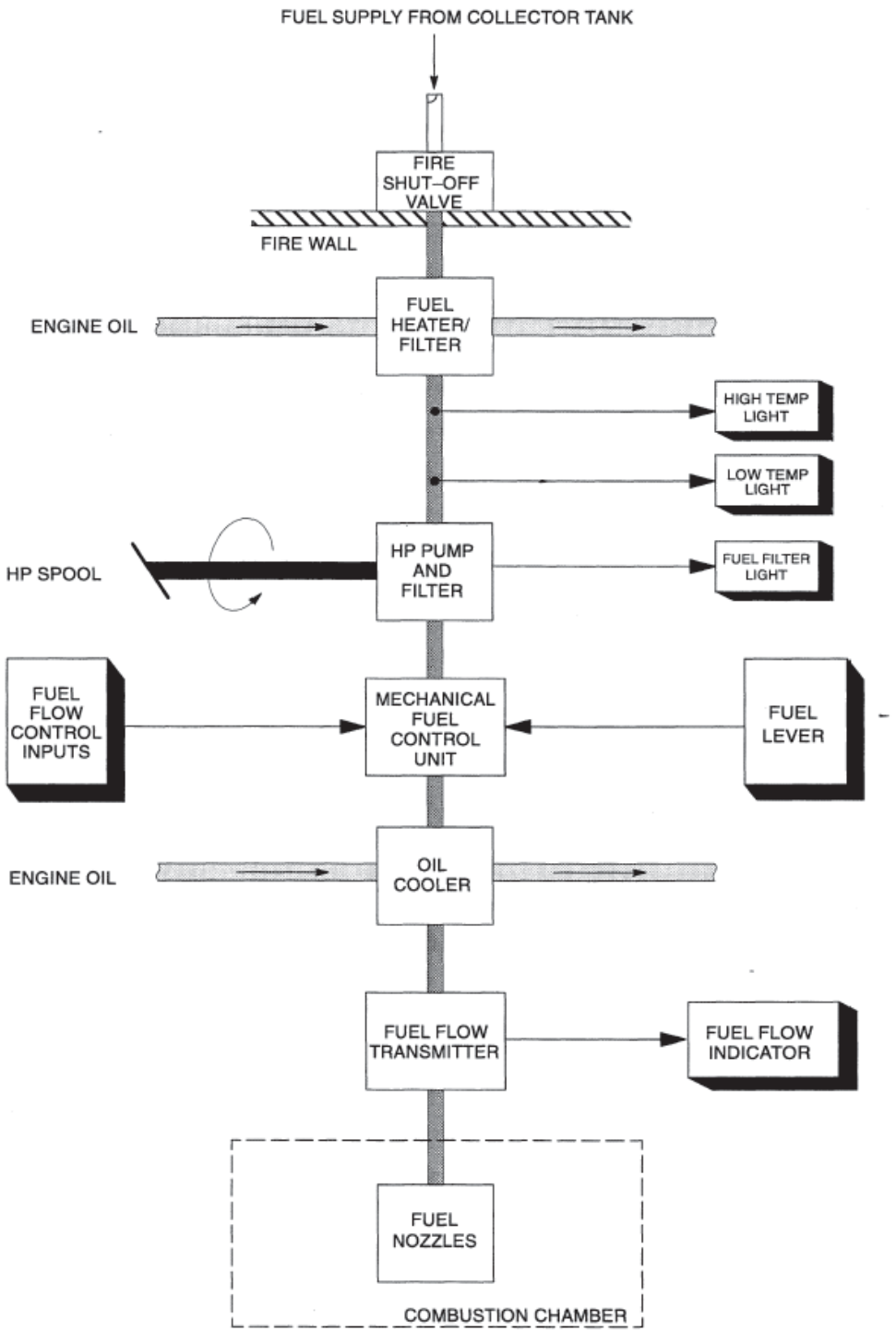

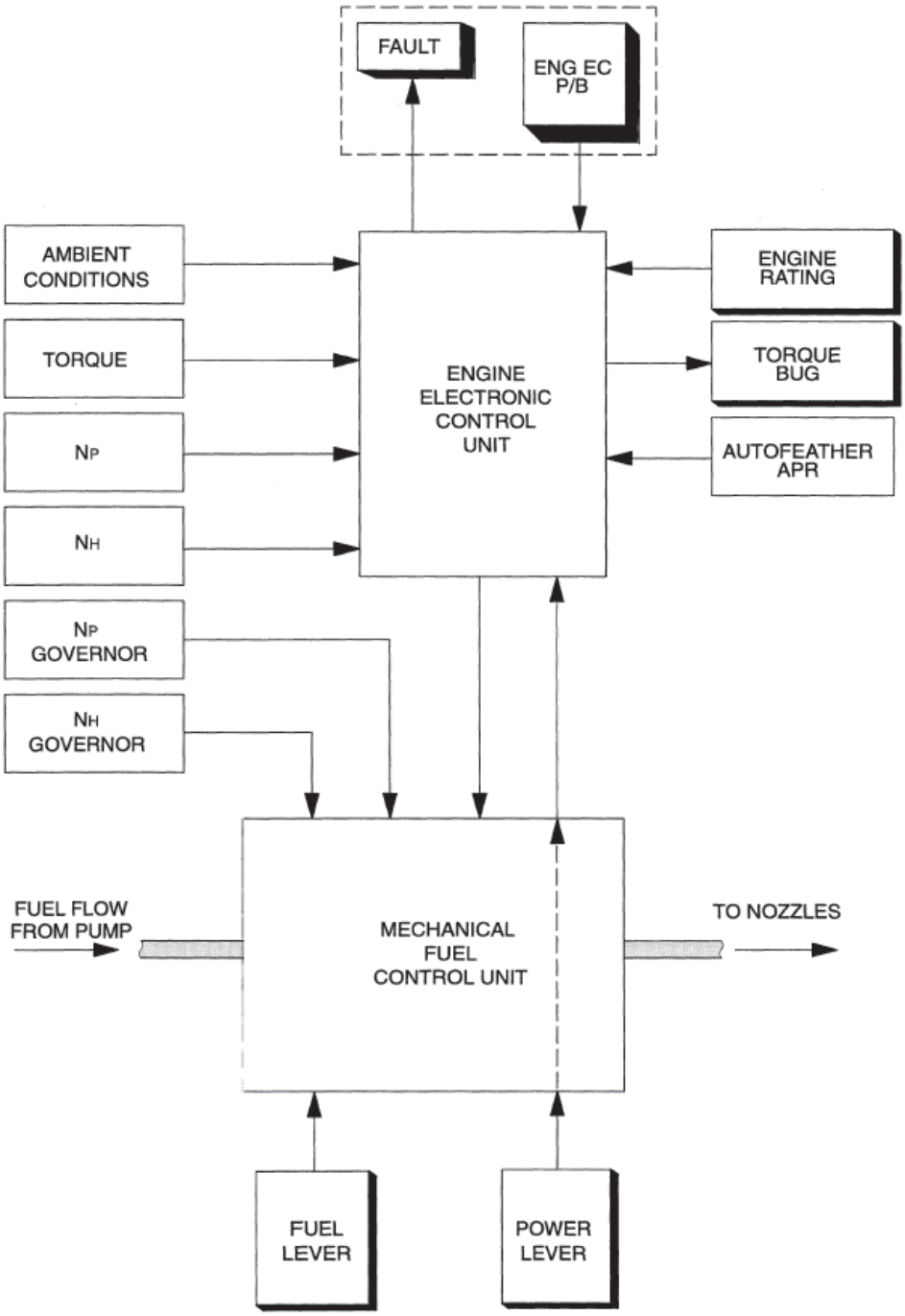
FAULT
ENG EC P/B
AMBIENT CONDITIONS
TORQUE
NP
NH
NP GOVERNOR
NH GOVERNOR
ENGINE ELECTRONIC CONTROL UNIT
ENGINE RATING
TORQUE BUG
AUTOFEATHER APR
FUEL FLOW FROM PUMP
MECHANICAL FUEL CONTROL UNIT
TO NOZZLES
FUEL LEVER
POWER LEVER

Controls and indicators

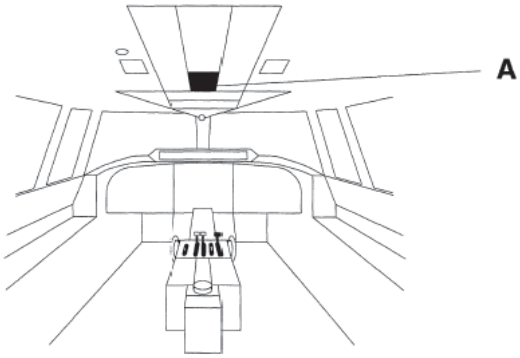

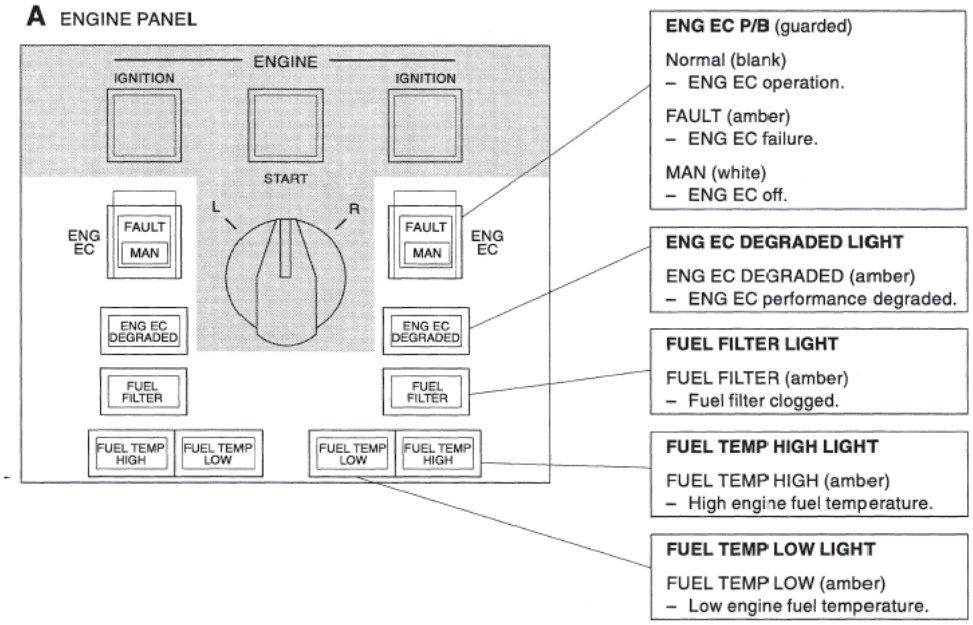

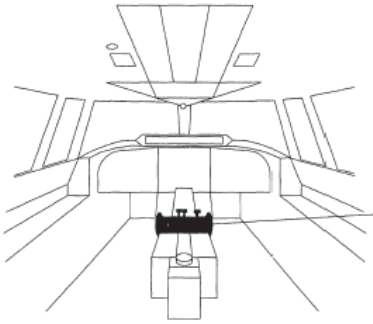

POWER LEVER

TO
- Detent.

FLT IDLE
- Stop/detent.

GND IDLE
- Detent.

REV
- Aft stop.

Power lever commands:
- Fuel metering system.
- Propeller control system.

GO–AROUND BUTTON

Depress momentarily:
GA engine rating selected (in flight only).

NOTE: For other functions of this button see section AFCS.

GROUND RANGE SELECTOR

Lift to retard from FLT IDLE to GND IDLE.

FUEL LEVER

SHUT
- Fuel shut–off valve closed.

START
- Fuel shut–off valve open.

OPEN
- Fuel shut–off valve open.

NOTE: Lift unlock knob to reposition the fuel lever.

FUEL LEVER LIGHT

Light comes on (white) when the FUEL lever is not shut and one of the following alerts is presented:
- Low oil pressure.
- High interturbine temperature.
- Engine failure.
- Engine fire.

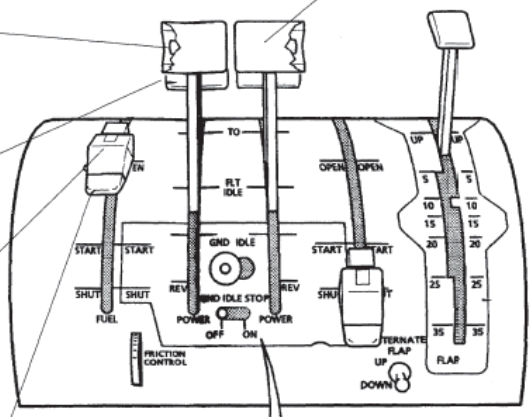

GROUND IDLE STOP KNOB

Pull to select ground idle stop on or off.

CAUTION: *Fingers can easily get caught between the fuel levers and the Ground Idle Stop when closing the fuel levers.*

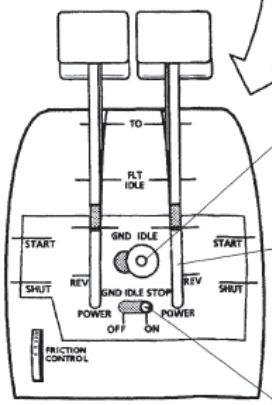

GROUND IDLE STOP KNOB INDICATOR

Flag indication:

Flag (white)
- Ground idle stop selected on.

ON:
- Ground idle stop selected on.
- No REV selection possible.

OFF:
- Ground idle stop selected off.

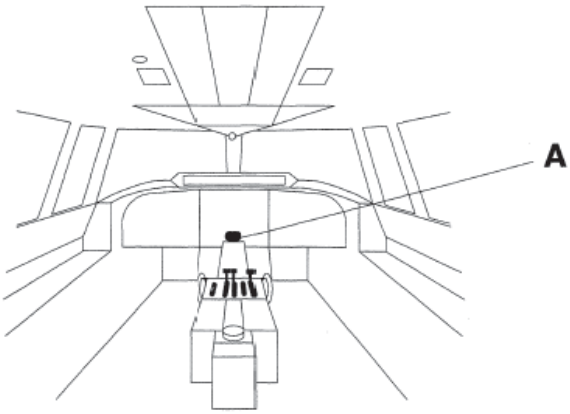

TEMPERATURE DISPLAY

Displays after FLX selection:
+ 25°C.
Reset with TEMP SELECTOR.
Display with any other mode selected: BLANK.

ENGINE RATING P/B's

TO, GA, FLX, CLB, CRZ, MCT
– Depress respective button to select the required engine rating.

NOTE:
1. *The selected rating determines the target torque and the propeller speed.*
2. *When FLX is selected, an assumed temperature can be entered.*
3. *In flight the GA rating can also be selected via the go–around button(s) at the power lever(s).*
4. *Upon touchdown the GA rating is selected automatically.*
5. *On the ground the TO rating is selected automatically approx. 16 seconds after touchdown.*
6. *The selected rating is indicated by a green bar.*

A ENGINE RATING PANEL

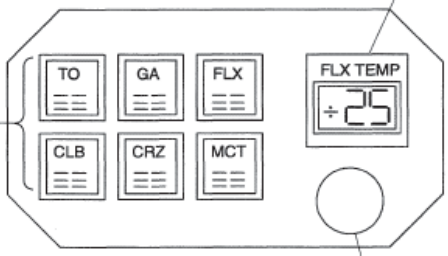

TEMPERATURE SELECTOR

To set assumed temperature after FLX selection.

Controls and indicators - Type I

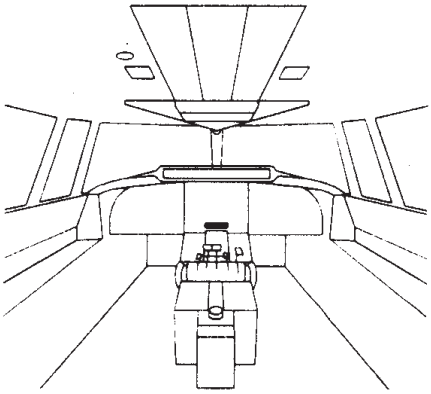

ENGINE RATING P/B'S

TO, GA, CLB, CRZ, MCT

– Depress respective p/b to select the required engine rating.

NOTES:

1. The selected rating determines the target torque and the propeller speed.
2. In flight the GA rating can also be selected via the go-around button(s) at the power lever(s).
3. Upon touchdown the GA rating is selected automatically.
4. On the ground the TO rating is selected automatically approx 16 seconds after touchdown.
5. The selected rating is indicated by a green bar.

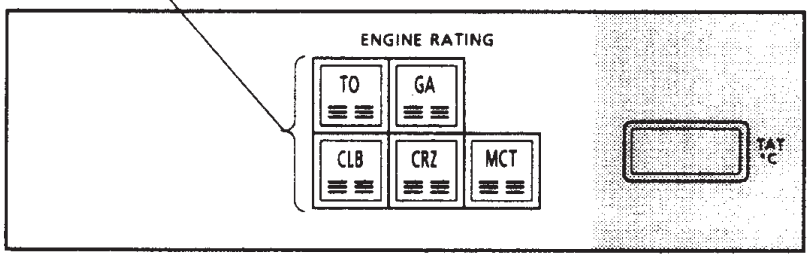

ENGINE RATING PANEL

Controls and indicators - Type II

Alerts

CONDITION(S) / LEVEL		AURAL	MWL/MCL	CAP	LOCAL
LOW FUEL TEMPERATURE	1				FUEL TEMP LOW
HIGH FUEL TEMPERATURE	1				FUEL TEMP HIGH
FUEL FILTER CLOGGED	1				FUEL FILTER
ENGINE EC DEGRADED PERFORMANCE	1				ENG EC DEGRADED

CONDITION(S) / LEVEL		AURAL	MWL/MCL	CAP	LOCAL
ENGINE EC FAILURE	2		CAUTION	L ENG EC OR R ENG EC	ENG EC FAULT ENG EC FAULT MAN
ERP FAILURE	2		CAUTION	ERP	

INSTRUMENTS

Description

Each engine has one set of instruments on the center main instrument panel. The following parameters are presented:

Propeller speed (NP)

NP is measured at the reduction gearbox, NP Is indicated as a percentage of maximum rpm (100 percent NP equals 1200 rpm),

Inter turbine temperature (ITT)

Sensors are located between the LP turbine and the Power turbine. ITT is indicated in degrees Celsius. When ITT exceeds 800ºC, a high ITT alert is presented. During air start, no ITT alert will be presented before one minute after opening the FUEL lever.

HP-spool speed (NH)

NH is indicated as a percentage of maximum RPM (100% NH equals 33 300 RPM). When NH drops below 60%, an engine-failure alert is presented. The alert is inhibited with FUEL lever SHUT.

LP-spool speed (NL)

NL is indicated as a percentage of maximum RPM (100 percent NL equals 27 700 rpm).

Torque

Torque sensors on the reduction gearbox drive-shaft provide for an indication of engine torque in percents. When the torque drops below 25% and the propeller autofeather system is armed, an engine-failure alert is presented. The alert is inhibited with FUEL lever SHUT. The target torque, as indicated by the target bug, is computed by the ENG EC. When the ENG EC is disconnected the target torque may be manually set by rotating the knob on the front of the instrument. When the knob is pulled the ENG EC input is disconnected. This is indicated by the adjacent MAN light.

For aircraft with high torque alert

When the actual torque exceeds 115%, a high torque alert on the CAP is presented.

Engine oil pressure

Engine oil pressure is indicated in PSI. When oil pressure falls below 40 psi, an oil pressure alert is presented. The alert is inhibited during engine start and engine failure.

Engine oil temperature

Engine oil temperature is indicated in ºC.

Fuel flow

The fuel flow displays are located at the fuel flow/aircraft weight indicator.

Controls and indicators

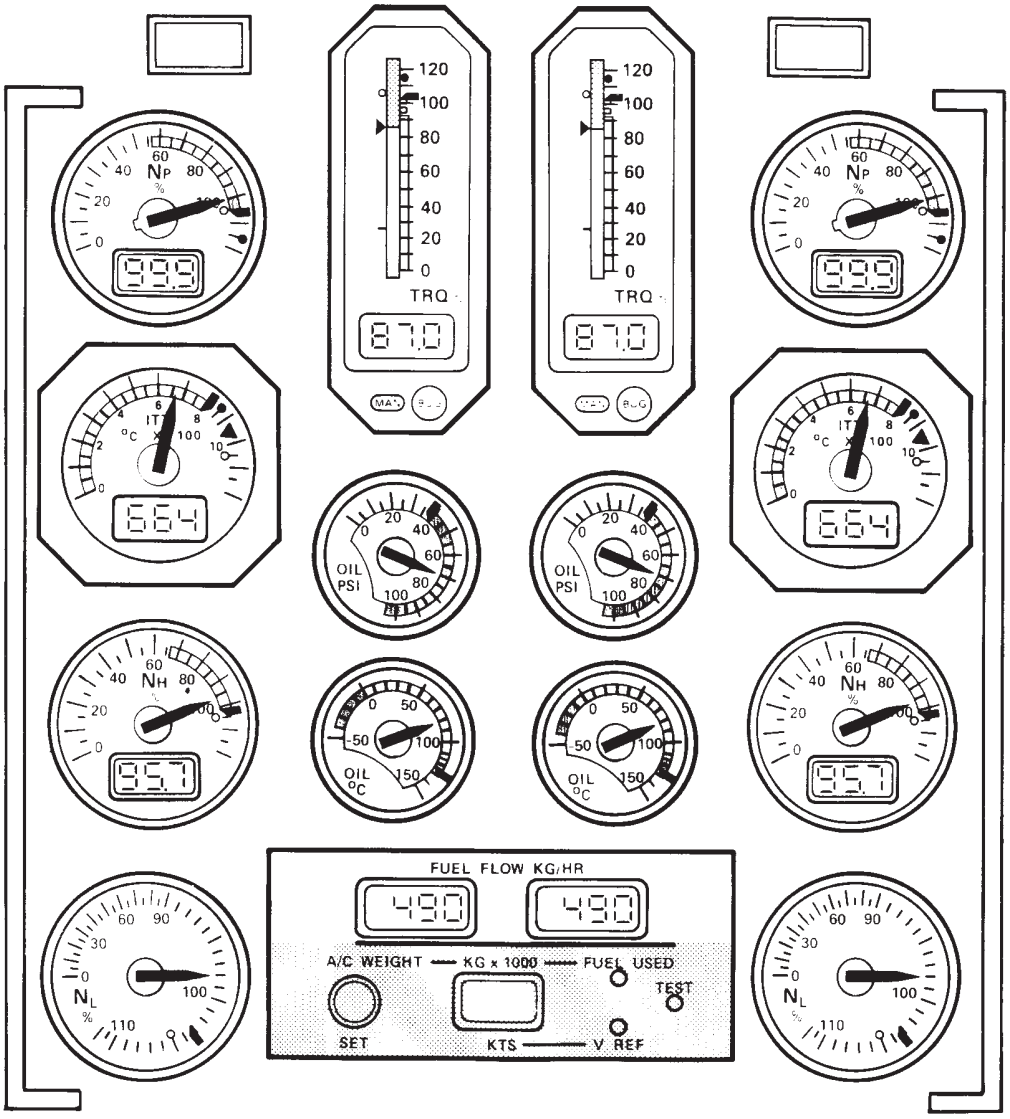

Controls and indicators - Type I

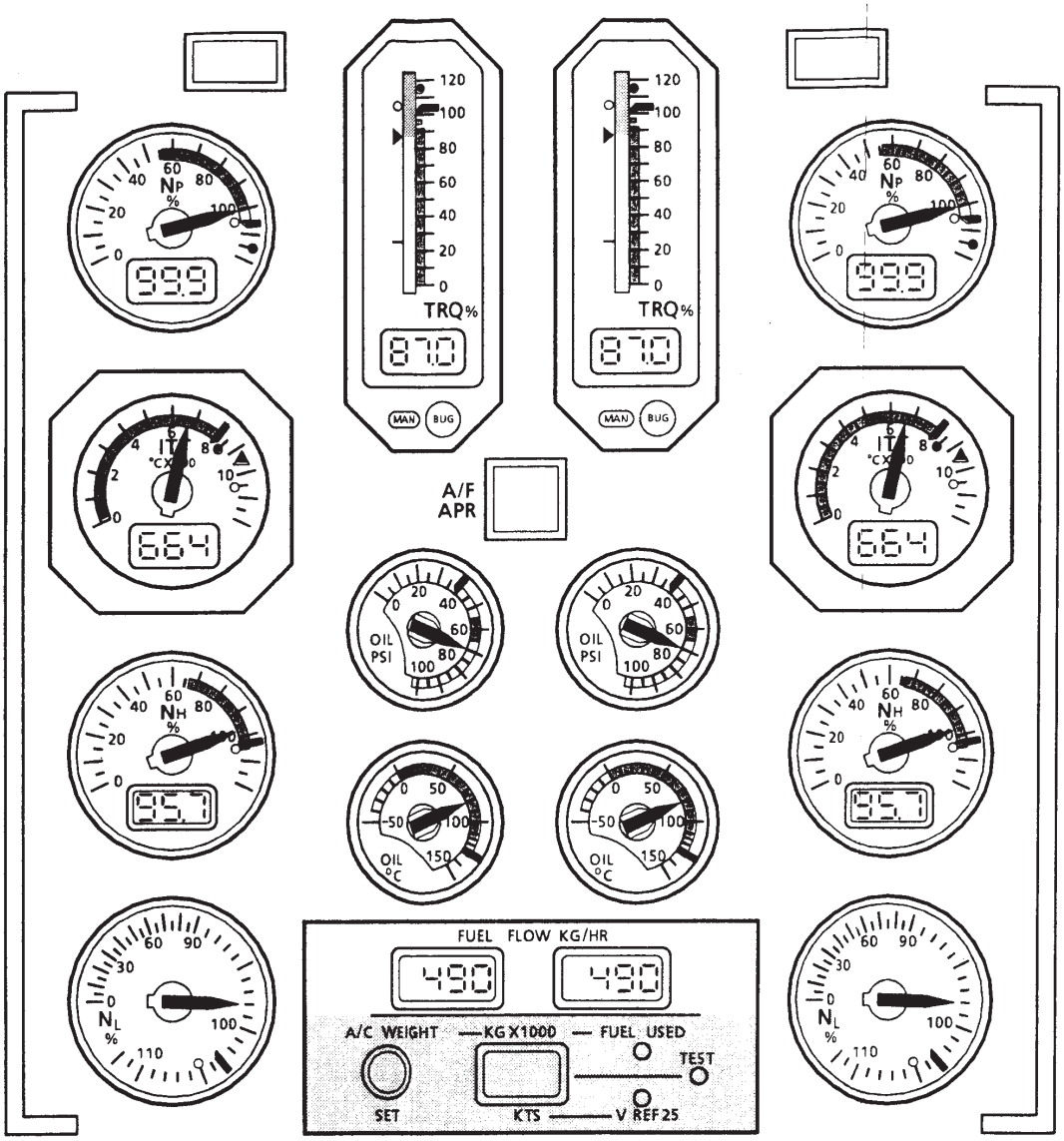

Controls and indicators - Type II

Alerts

CONDITION(S) / LEVEL		AURAL	MWL/MCL	CAP	LOCAL
LOW OIL PRESSURE	3		WARNING	L ENG OIL PR OR R ENG OIL PR	RELEVANT FUEL LEVER LIGHT (WHITE)
HIGH INTERTURBINE TEMPERATURE	3		WARNING	L ENG ITT OR R ENG ITT	RELEVANT FUEL LEVER LIGHT (WHITE)
ENGINE FAILURE	3		WARNING	L ENG OUT OR R ENG OUT	RELEVANT FUEL LEVER LIGHT (WHITE)

For aircraft with high torque alert

HIGH ENGINE TORQUE	2

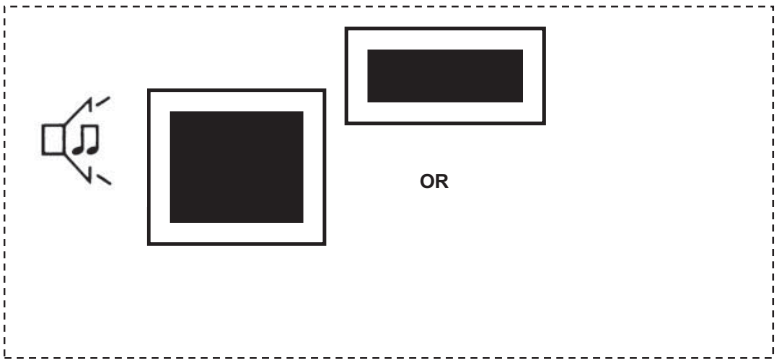

PROPELLER CONTROL

General

Each engine drives a variable-pitch constant-speed propeller. The pitch ranges from feathered, through zero pitch, to full reverse. Two propeller speed (NP) indicators are located at the center main instrument panel, one for each propeller. Two control ranges can be defined:

- Above flight idle: Constant speed control
- Below flight idle: Beta control

In flight power lever positions below flight idle are prevented by a flight idle stop. After touchdown, or with wheel spin-up, the flight-idle stop can be withdrawn by lifting the ground range selector.

Constant speed control

Propeller speed

Above flight idle, the Propeller Electronic Control unit, activated via the PROP EC pushbutton at the PROPELLER panel, controls NP by varying the blade angle. NP is controlled to 100 per cent during take-off (TO), maximum continuous (MCT), and go-around (GA). NP is controlled to 85 per cent during climb (CLB), cruise and descent (CRZ). Depending on POWER lever position and forward speed, NP can decrease to below the selected speed. Synchronizing and synchrophasing are enabled automatically.

NOTE: FLEX (FLX) is either not used or not installed

Propeller pitch

Propeller pitch in flight varies from +15 degrees (in approach and landing) to approximately +45 degrees. Propeller pitch is controlled by balancing oil pressure against the coarse seeking force that results from counterweights, which are attached to the roots of the blades. A propeller gearbox-driven HP pump, which is part of the overspeed governor is supplied with engine oil and provides the required oil pressure. In the event of oil pressure loss of the propeller driven HP pump, the counterweights will coarsen the blades to an angle of at least +55 degrees. At this blade angle, propeller overspeed cannot occur and wind-milling drag is minimized. The propeller-driven HP pump is driven separately from the engine-driven oil pump and consequently provides pressure as long as the propeller is wind milling. In case of an engine failure in flight the propeller will initially try to maintain its selected constant speeding NP, until the propeller is either manually or automatically feathered. A variable blade-angle stop is provided to prevent an inadvertent low blade angle in flight. The minimum blade-angle stop (+15 degrees) is operative with the POWER lever at flight-idle. The maximum blade-angle stop (+17 degrees) prevents an inadvertent fine pitch during high power settings.

Beta control

Below flight Idle, the POWER lever controls propeller pitch directly from approximately +15 degrees to the full reverse stop (-17 degrees). When the beta range is entered, a LO PITCH light, located at the center main instrument panel illuminates. The commands of the PROP EC are bypassed and NP is now controlled by POWER lever position and the ENG EC. NP is controlled at approximately 95% when the power lever is set to full reverse. Minimum NP is 80% when the GA engine rating is selected. With all the other engine ratings selected minimum NP is 62,5%.

Overspeed protection

In flight a propeller overspeed governor comes into operation at 104% NP. The gearbox driven governor will reduce the oil pressure to the pitch change mechanism. If NP is NOT reduced and NP reaches 108% NP the overspeed governor will reduce the fuel flow. On the ground when the propeller is beta controlled overspeed protection is accomplished at 108% NP by reducing the fuel flow. A propeller overspeed pushbutton is located at the test panel to test the governor operation while the engines are running.

Feathering

The propeller can be feathered automatically or manually. The propeller is feathered manually when the fuel lever is set to SHUT or START. During shut down on the ground, combined action of the counterweights and oil pressure is sufficient to feather the propeller. In flight additional oil pressure from an electrical driven feathering pump, which operates for 30 seconds and is used to obtain automatic or manual feathering. Pump operation is indicated by a FEATHER PUMP light. The feathering pump uses reserve engine oil. The autofeather system which, has automatic power reserve (APR) facility, can be inactive, standby or armed. Each condition will be presented by the autofeather light at the center main instrument panel. The autofeather system is on standby (STBY) when TO or GA is selected at the ERP, or when the landing gear is down, provided neither propeller is feathered. When in addition both power levers are set to TO and the actual torque reaches 50% the system will be ARMED.

A propeller will autofeather when:

- The autofeather system is ARMED.
- The actual engine torque drops below 25%.

Auto feathering results in an uptrim command (APR) to the ENG EC of the live engine. Automatic ignition of the engine of which the propeller is feathered is inhibited. The pilots are informed by an engine failure alert and the autofeather system will be disarmed. Two AUTOFEATHER TEST buttons are located at the test panel to check the system.

NOTE: FLEX (FLX) is either not used or not installed

Functional diagram

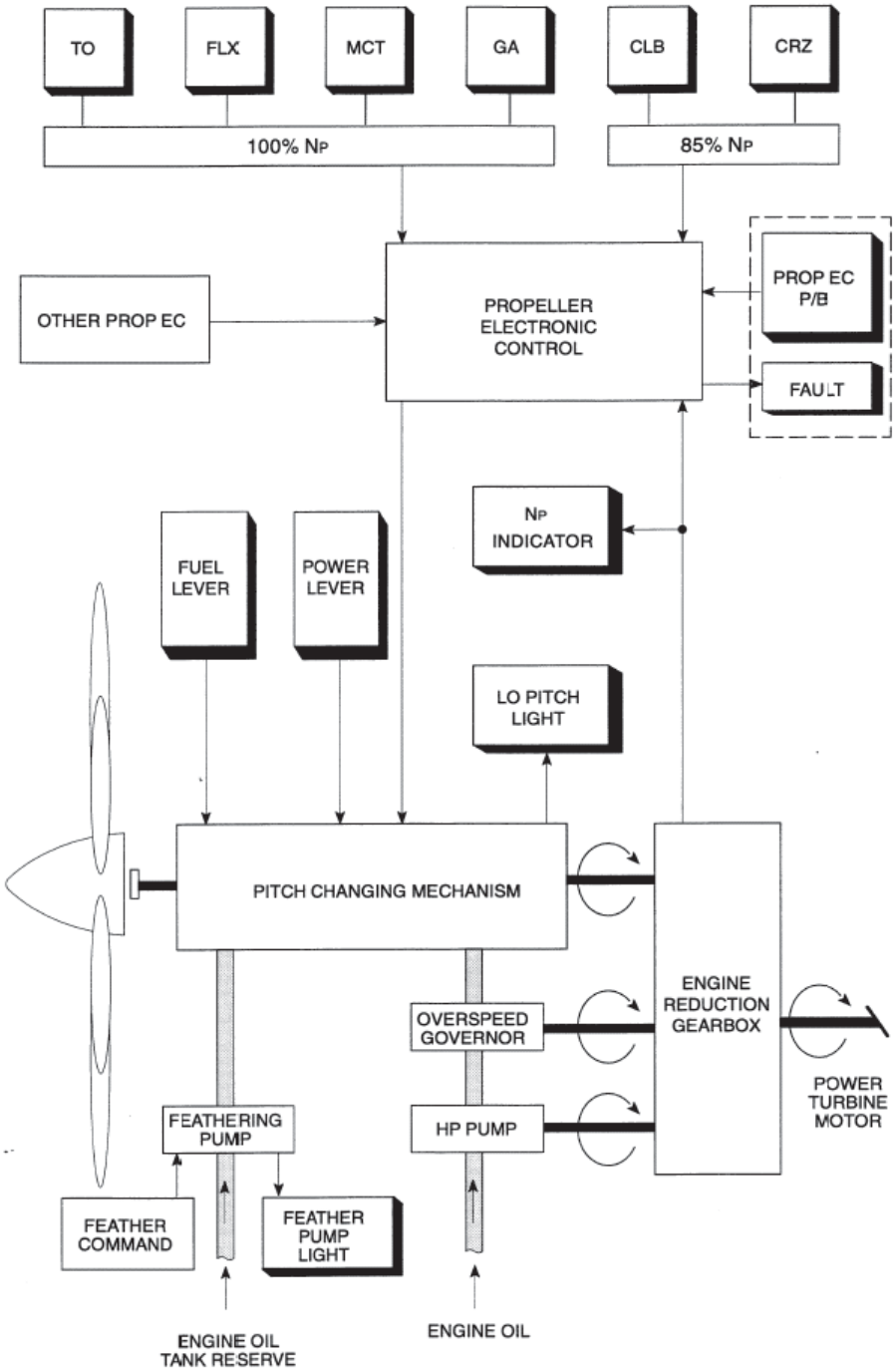

NOTE: FLEX (FLX) is either not used or not installed

Controls and indicators

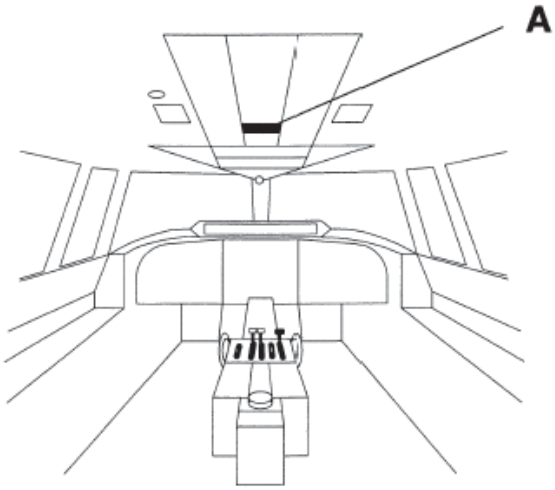

A PROPELLER PANEL

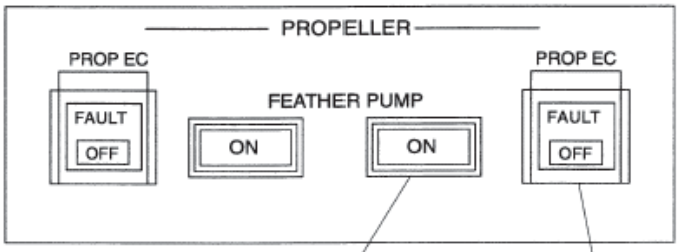

FEATHER PUMP LIGHT

ON (white)
– Feather pump in operation.

PROPELLER ELECTRONIC CONTROL P/B (guarded)

Normal (blank)
– PROP EC operative.

FAULT (amber)
– PROP EC failure.

OFF (white)
– PROP EC inoperative.

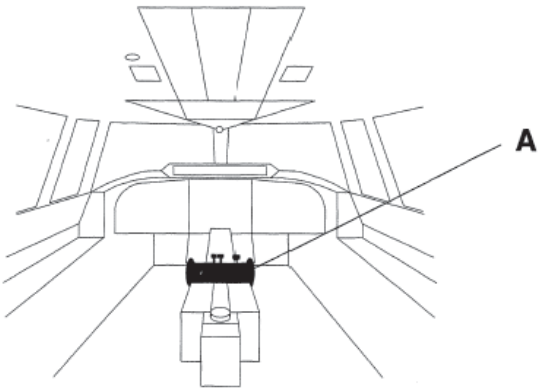

FUEL LEVER

OPEN
- Propeller control operative.

START
- Propeller feathered.

SHUT
- Propeller feathers during engine rundown.

POWER LEVER

TO
- Constant speed control.
- Low blade angle stop (17 degrees).

FLT IDLE
- Constant speed control.
- Low blade angle stop (15 degrees).

GND IDLE
- Beta control.
- Zero pitch.

REV
- Beta control.
- Maximum reverse blade angle (–17 degrees).

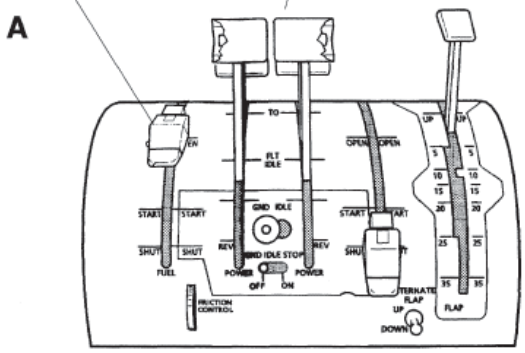

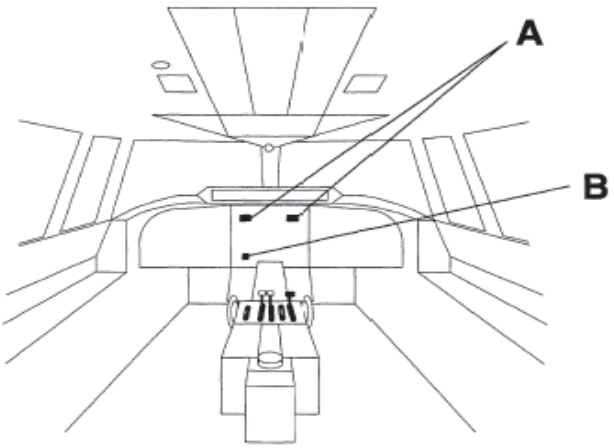

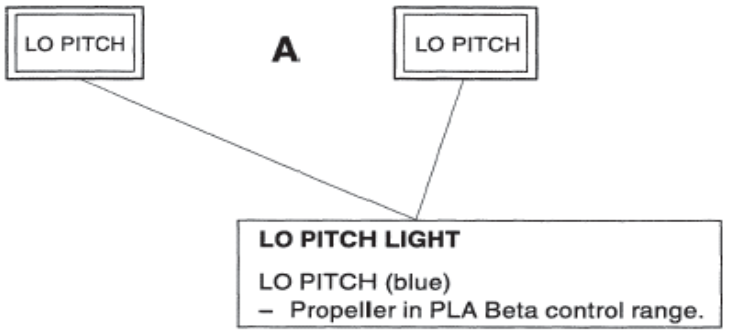

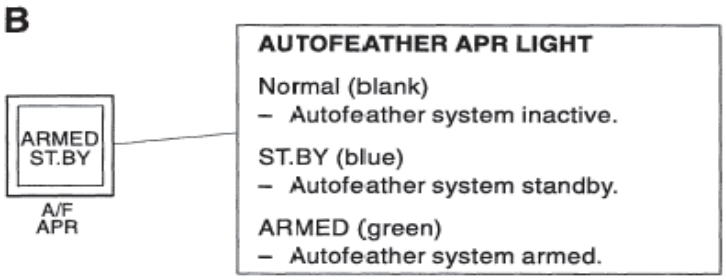

Controls and indicators – Type I

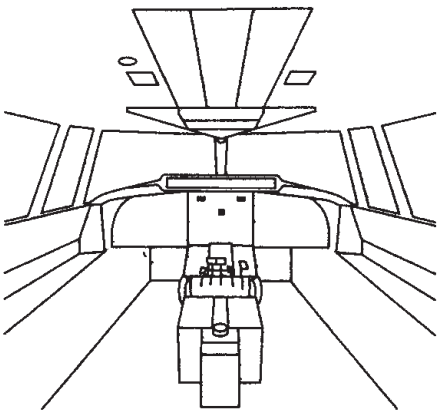

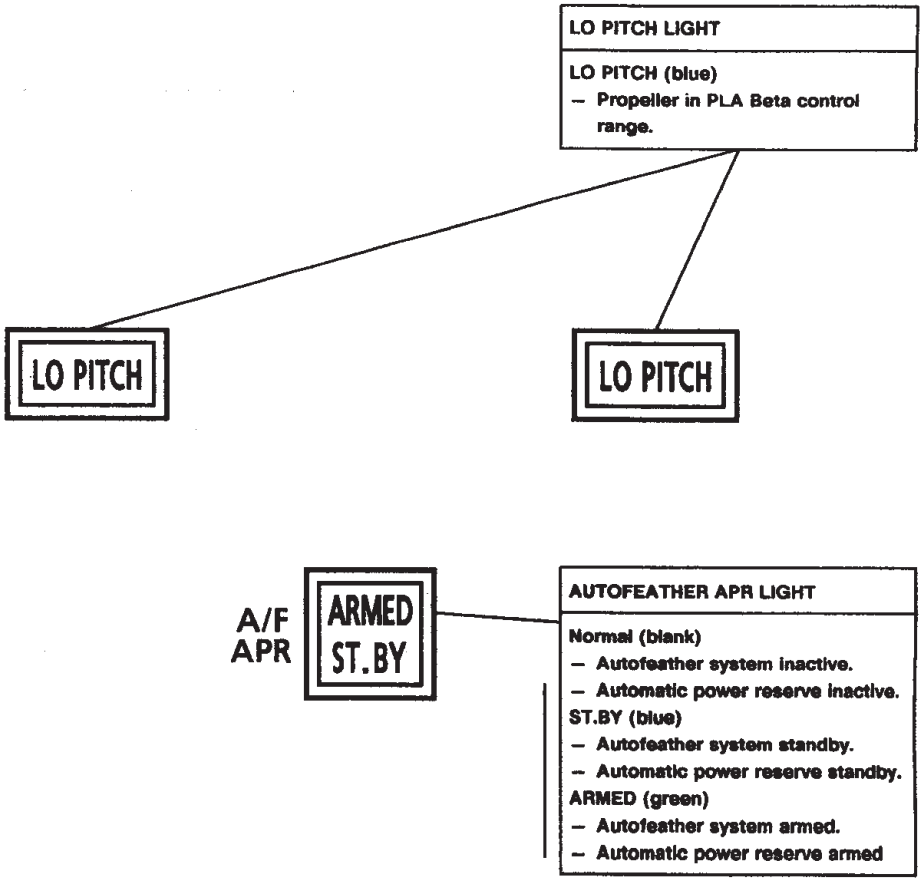

Controls and indicators – Type II

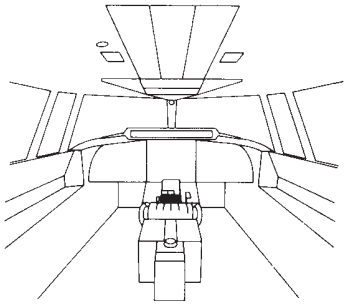

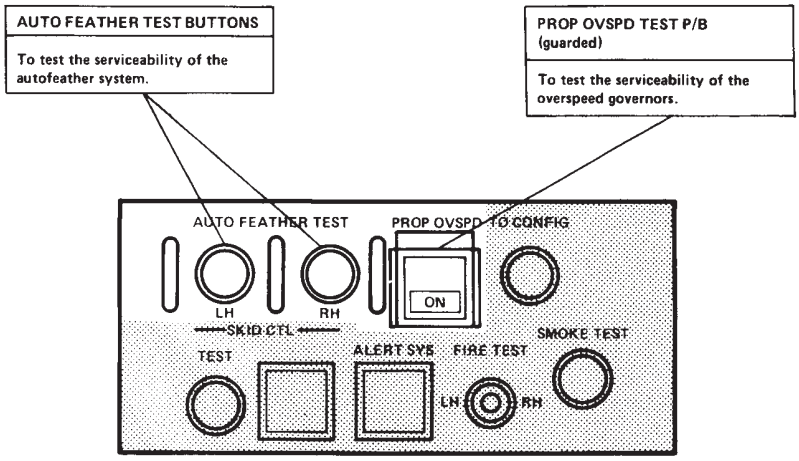
AUTO FEATHER TEST BUTTONS
To test the serviceability of the autofeather system.
PROP OVSPD TEST P/B (guarded)
To test the serviceability of the overspeed governors.
AUTO FEATHER TEST
PROP OVSPD TEST
TO CONFIG
LH
RH
ON
SKID CTL
SMOKE TEST
TEST
ALERT SYS
FIRE TEST
LH
RH

TEST PANEL

Alerts

CONDITION(S) / LEVEL		AURAL	MWL/MCL	CAP	LOCAL
PROP EC FAILURE	2		CAUTION	L PROP EC OR R PROP EC	PROP EC FAULT

SYSTEM OPERATION

General

Engine durability is directly related to ITT versus time. Rapid power changes may cause high temperature transients and are detrimental to turbine section life. Overtorque may require engine and gearbox overhaul. All torque levels are defined in percentages.

Engine ratings

Engine ratings are selected on the Engine Rating Panel (ERP). The ENG EC calculates the torque-bug setting for the particular ambient conditions. The PROP EC determines the NP for the engine rating selected. The pilot should set the torque to the target bug to obtain the required rating. This target-bug rating should not be exceeded deliberately except in an emergency situation.

Max Take-off (MTO)

This is the maximum power certified and is time limited.

Normal Take-off (TO)

This is the take-of power to be used normally. The torque bug is set for normal take-off when TO is selected on the ERP.

Automatic Power Reserve (APR)

APR is equal to max take-off power and will be selected automatically by the ENG EC in case of engine failure but only when the autofeather system is armed.

Flexible Take-off (FLX)

The benefit of flexible take-off power applies only to a very small envelope of temperature and pressure altitude and is as such not useful for the purpose of cost saving.

NOTE: FLEX (FLX) is either not used or not installed

Maximum Continuous (MCT)

The maximum continuous rating is the maximum power certified for continuous use.
This rating should only be used when required to ensure safe flight (engine failure).

Climb (CLB)

This is the normal climb rating.

Cruise (CRZ)

This is the normal cruise rating. For cruise flight at low altitudes this rating may provide a thrust to exceed V_{MO}. In this case reduce torque as required to maintain IAS at or below V_{MO}.

Maximum Go-Around (GA)

This is the maximum permissible power during go-around. Selection of GA on the ERP with the torque set to bug gives a thrust identical to maximum take-off thrust.

Engine control

General

Rated engine power is obtained by setting the power lever (PLA) to the take-off position (detent). The actual torque should match the target bug. The ENG EC defines the setting of the target bug in relation to the following inputs:

- Engine rating selected.
- Ambient pressure (altitude).
- Total engine inlet pressure.
- Total engine inlet temperature.

Target bug split

Sensor inaccuracy may cause differences in target bug values. Torque bug accuracy is best at low altitude and low airspeed as in take-off.

Torque indication during take-off

At 60 KIAS verify that the actual torque is not less than the required torque with a maximum of 92 per cent. However, due to sensor inaccuracy a two per cent deviation between actual torque and required torque is acceptable. This deviation may result in a four per cent target bug split. The required torque can be obtained from the QRH tables or AFM chapter PERFORMANCE.

If the actual torque is more than two per cent below the required torque, the take-off should be rejected.

Torque indications during climb and cruise

During flight at higher altitudes and high speeds the impact of sensor increases and the target bug split may be larger; up to six per cent is considered acceptable. A target bug split of more than six per cent should be recorded in the aircraft maintenance log. To aid trouble shooting, it is recommended to record under stabilized cruise conditions for both engines:

- Target bug setting (with PLA in the detent).
- Actual torque (digital read-out).
- Indicated airspeed.
- Altitude.
- TAT.

Engine ignition

Both ignition systems are activated automatically if an engine flames out provided the fuel lever is not SHUT and the flame-out did not result in an autofeather.

Engine start

Complete BEFORE STARTING CHECK. Obtain take-off torque from the tables in the QRH or AFM chapter PERFORMANCE. Note value on TAKE-OFF DATA CARD.

Start:
Engine selector.....L or R (hold momentarily)

On passing 20 per cent NH:
Fuel lever.....START
Monitor engine acceleration and ITT

When NH in green band:
Fuel lever..... OPEN
Start pushbutton ..... SWITCH OFF
Oil pressure .....CHECK ABOVE 40 PSI

Taxiing

Power to taxi is controlled by the PLA in the ground beta range with constant NP speed. Maximum taxi power selection is limited by the flight-control lock. If more than this maximum power is required, release the flight-control lock. If more than this maximum power is required, release the flight-control lock. If the power levers were moved into the flight range, lift the ground-range selector to select ground-idle. For taxiing with crosswind, select slightly more torque on the upwind engine. Differential power can be used for sharp turns.

Take-off

Perform the BEFORE TAKE-OFF CHECK.

During take-off
- Start clock (PNF)
- Release brakes
- Set PLA at TO detent
- Adjust PLA as necessary to align torque with bug

Check:
Torque .....BUG
NP ..... 100 per cent
APR/AF ..... ARM
Oil pressure .....GREEN BAND
Oil temperature.....GREEN BAND
ITT .....GREEN BAND

At 60 KIAS
Torque .....VERIFY WITH TO DATA
Observe the time limit.

Climb

Select CLB on ERP

Check:
NP ..... 85 per cent
Torque .....BUG

Cruise

Select CRZ on ERP

Check:
NP ..... 85 per cent
Torque .....BUG

When V_{MO} is reached, reduce torque as required.

Descent

Reduce torque as required.

Approach and go-around

In case of Go-Around:

Select GA rating by depressing the GA button at either power lever.
Set PLA at TO detent
TORQUE .....BUG

As soon as practicable:

CLB ..... SELECT
TORQUE .....BUG

Single engine approach and go-around

Before starting a single engine approach select GA rating on ERP.
This selection will arm the ENG EC for GA power at 100% NP.

In case of go-around:
Set PLA at TO detent
TORQUE .....BUG

After reaching V_{FTO}:
ERP .....MCT
PLA..... Retard slowly to match torque with bug

Landing and reverse

After landing ERP will reset automatically to GA rating which will result in 80% NP.
After landing, lift ground-range selector and reduce thrust to ground-idle. To select reverse, pull power levers back from ground idle. Maximum torque for full reverse is 90 per cent.
Approximately 16 seconds after touchdown (ground/flight switching) ERP will reset to TO.

Taxi-in and shutdown

Power lever ..... GND IDLE
Fuel lever.....START

Hold FUEL lever in START for 10 seconds or until torque indication drops to zero percent to ensure propeller to feather.

Fuel lever.....SHUT
Fuel pumps..... SWITCH OFF

NOTE:

- If oil quantity check is required, allow engine to stabilize, with fuel lever in start position, for at least 20 seconds before shutdown.
- Allow engine to operate at idle for at least one minute before shutdown (including taxi at low power or operation with FUEL lever in START).
- During shutdown, observe that engine decelerates freely.

Touch and go

After landing do NOT select ground idle.
Before advancing PLA select TO on the ERP.

Engine start with aircraft batteries

The first engine will be started with battery power only. The only available engine indications at that moment are NH, ITT and TRQ. When the first engine has started, the generator will feed all buses, so starting the second engine will be with generator power. Follow the normal engine start procedure as described above.

With BAT PWR ONLY the ERP will be in GA and the CAP will show an ERP FAULT indication. When the generator comes on line the ERP will automatically reset to TO and the fault indication will disappear.

Engine start with external DC power

Engine start with external DC power is identical to the engine start with external AC power, but during engine start of the first engine fuel flow indication is not available.

High ITT during take-off

Unequal engine bleed off-take may cause a large difference in ITT's during take-off. If during operation at high OAT, the ITT limit for NORMAL TO power is expected to be exceeded, bleed air of both engines should be switched off. In this case the ITT limit is 10 deg C lower than the normal TO limit.

Procedure

Before take-off:
LEFT AND RIGHT BLEED ..... OFF

After selection of CLB power:
LEFT AND RIGHT BLEED ..... ON

ENG EC OFF

In case the ENG EC is off (FAULT or MAN), the engine will be controlled by the Mechanical Fuel Control unit (MFC). This basic control does not incorporate propeller underspeed governing. During ground operation, NP may drop to a level below minimum IDG rpm, which may cause temporary loss of a generator. MFC operation might show a different PLA/torque relationship, so power lever stagger may be the result. More power lever adjustment will be required to keep the torque matched with the torque bug.

One engine with ENG EC Off

In case control of the torque bug by the ENG EC is inoperative, match the torque with the bug of the other engine. During MFC operation, the APR facility is inoperative; the take-off should be performed with maximum take-off power, which is selected by GA on the ERP.

Both engines with ENG EC Off

NOTE: In case control of both torque bugs by the ENG ECs is inoperative, set bugs manually according to torque tables in QRH.

Climb:

TORQUE ..... MATCH BUG
Adjust power levers to match torque with bugs.
Monitor torque during climb.

Cruise:

ENGINE RATING ..... CRZ
TORQUE ..... MATCH BUG
Adjust power levers to match torque with bugs.

Descent:

TORQUE ..... REDUCE AS REQD
Retard power levers to reduce torque.

Approach:

ENGINE RATING ..... GA
Select by depressing the GA button at either power lever.

Go-around:

POWER LEVERS..... TO
TORQUE ..... MATCH BUG
The PNF adjusts power levers to match torque with bugs.

Landing:

POWER LEVERS..... GND IDLE
REVERSE ..... IF REQD

Taxi:

ENGINE RATING ..... TO
NP ..... 60 PER CENT
Adjust power levers to set NP at approx 60 per cent.