ECLIPSE 500

Aircraft Overview

Do Not Use For Flight

1. Aircraft Overview

1.1 General

The Eclipse 500 is a twin-turbofan aircraft powered by two Pratt & Whitney Canada PW610F-A engines. It is a five- to six-place, low-wing, T-tail aircraft using conventional aircraft semi-monocoque structural elements joined together using both friction stir welding and mechanical fasteners. The primary aircraft structure is aluminum with limited use of composite materials in secondary structural areas such as fairing and floor panels.

The Eclipse 500 is an 'all electric' aircraft and uses conventional mechanical flight controls that do not require hydraulics, except for the master brake cylinders.

In general the management of the Eclipse 500 is divided into four functional areas:

1. Avio Integration (ACS and PFD)
2. Thrust Control (Throttles and Engine Control Systems)
3. Emergency Controls (Left Switch Panel Hard Switches)
4. Flight Controls (Mechanical Flight Control System)

The avionics system on the Eclipse 500 provides total aircraft integration through redundant computer systems that provide the pilot centralized control of most aircraft systems and functions. The Electronic Flight Instrument System (EFIS) consists of two 10.4 inch Primary Flight Displays (PFDs) and a 14.1 inch Multi Function Display (MFD). Referred to as Avio™, the Eclipse 500's avionics increase safety and reduce pilot workload.

1.2 Aircraft Dimensions

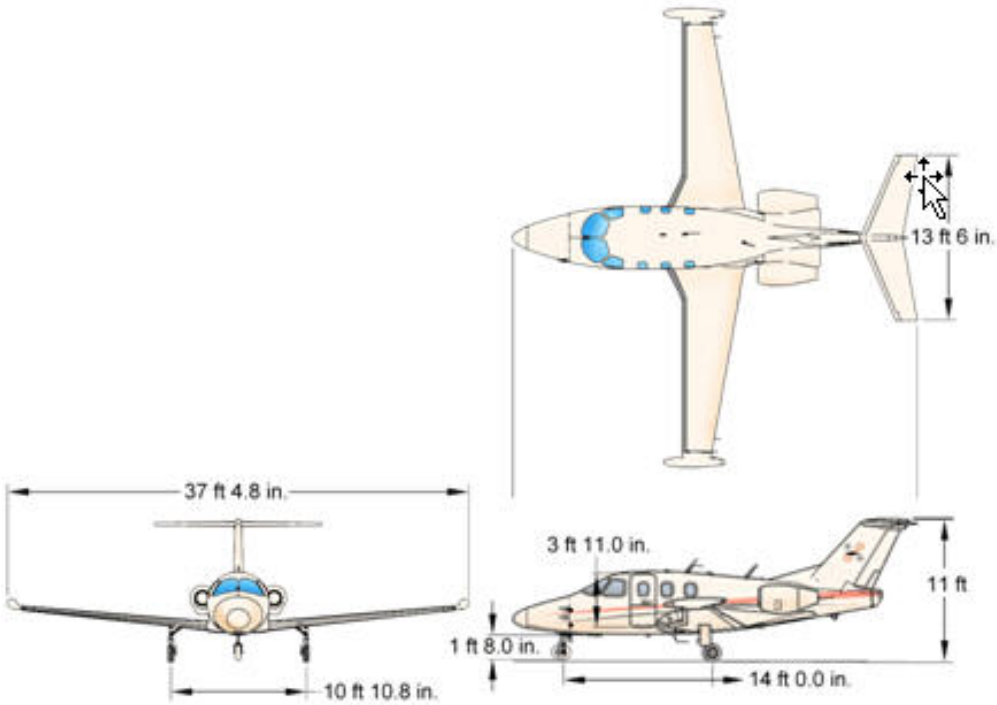

Aircraft Dimensions

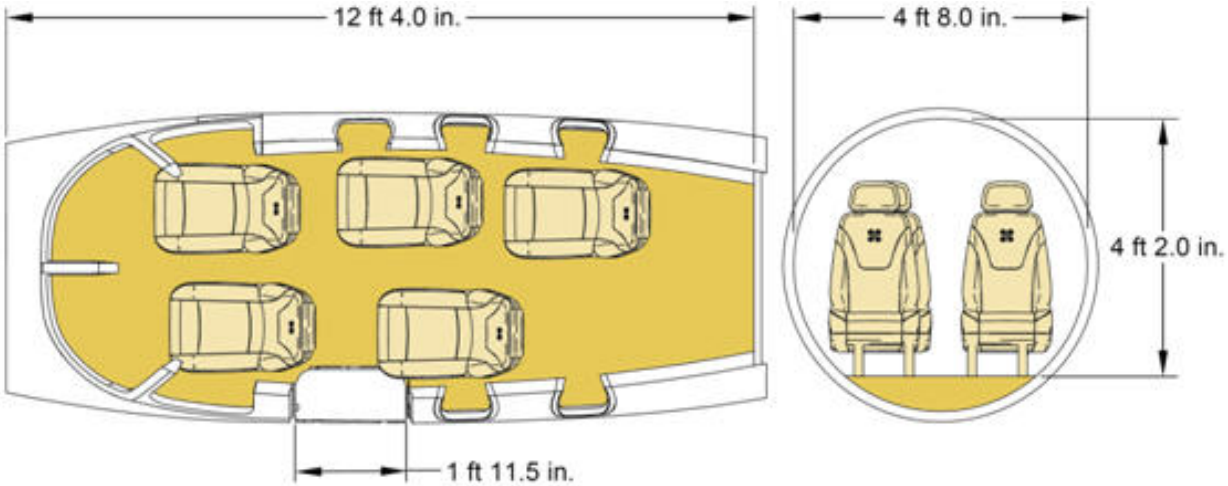

Cabin Dimensions

1.3 Seating Arrangements

Standard seating is a five place configuration; however an optional six seat is available. Seats may be removed from the aircraft to provide additional space.

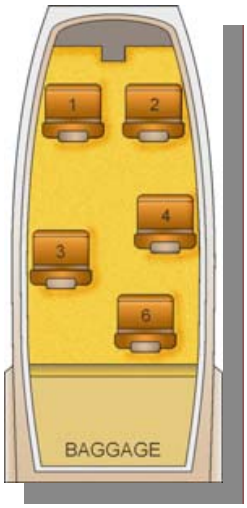

Standard Five Seat Configuration

Six Seat Configuration

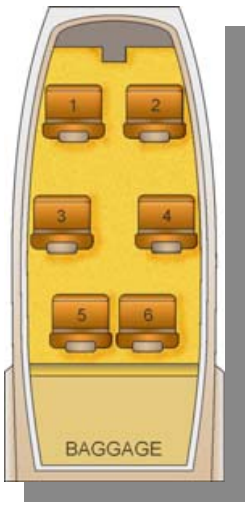

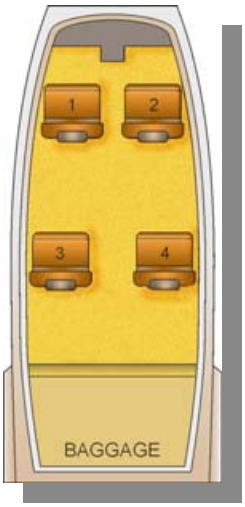

Four Seat Configuration

1.4 Performance and Capabilities

1.4.1 Performance

Below is a table of key performance data of interest to the pilot.

Performance Data

Performance		Design Speeds	
Max Cruise Speed (at 4,950 lbs, ISA conditions, 35,000 ft)	370 KTAS	V_s (Stall speed clean configuration)	90
NBAA IFR Range, 4 Occupants (at high speed, 200 lb Pilot + 3 170 lb Passengers)	1,125 nm	V_{SO} (Stall Speed landing configuration)	69
Time to Climb, 35,000 ft	19 min.	V_o (Operating maneuvering speed)	180
Max Climb rate (Both Engines, Takeoff Power)	3,314 fpm	V_{MO} (Max Operating Limit Speed)	275
Single engine climb rate	888 fpm	M_{MO} (Max Operating Mach Number)	0.64 M
		V_{FE} (Flaps TO)	200
		V_{FE} (Flaps LDG)	120
		V_{LE}	275
		V_{LO}	200
Limit Load Factors		**Operational Limitations**	
Flaps UP	+3.62/-1.45 g's	Max operating altitude	41,000 ft
		Max Cabin Pressure Differential	8.7 PSI
		Single engine service ceiling	25,000 ft

1.4.2 Aircraft Parameters and Capabilities

Below is a table detailing key aircraft parameters and capabilities of interest to the pilot.

Aircraft Parameters and Capabilities

Cabin		Weights	
Cabin Length (Pressure Vessel)	148 in	Max Ramp Weight	5,800 lbs
Height	50 in	Max Landing Weight	5,415 lbs
Width	56 in	Max Takeoff Weight	5,760 lbs
Aisle Width	9 in	Max Zero fuel Weight	4,860 lbs
Luggage Area	16 ft^3 / 260 lbs	Useful Load	2,266 lbs
Operating Pressure (8,000 ft cabin @ 41,000 ft)	8.33 psi	Total Fuel Capacity	1,540 lbs
Pressurized Volume	240 ft^3	Total Useable Fuel	1,516 lbs
Wing		**Power Plant**	
Wing Span	37.4 ft	Two Pratt & Whitney 610F turbofan engines	900 lbs Thrust
Wing Sweep	0° leading edge	**Design Life**	
Wing Area	144.4 ft^2	Hours	20,000 hours
Aspect Ratio	8.88	Cycles	20,000 cycles

1.5 Eclipse 500 Aircraft System

The Eclipse 500 Aircraft systems the is divided into four major functional areas

1. Avio Avionics Suite
2. Thrust Control
3. Essential Systems
4. Mechanical Flight Controls

1.5.1 Avio Avionics Suite

The Eclipse 500 integrated avionics system provides may of the required controls and displays, sensor data processing and aircraft subsystem monitoring and control. Details on this functional area of Avio are contained within chapter 2, “Avio Avionics Suite.”

1.5.2 Thrust Control

The Eclipse 500 is a twin turbofan jet powered by two Pratt & Whitney Canada PW610F-A high-bypass turbofan engines. These engines produce high fuel efficiency and lower noise output in comparison to an average turbojet engine. The control of thrust in the Eclipse 500 does not require Avio in order to continue to operate. The engine thrust control has three basic elements:

1. Throttles
2. Full Authority Digital Engine Control (FADEC) units
3. Fuel Metering Units (FMUs)

The use of dual FADEC channels, increases redundancy and heath monitoring capability. Thrust is manually set using two throttles or automatically set using the autothrottle system.

1.5.1 Essential Systems

The essential systems in the Eclipse 500 are designed to operate autonomously in the event failure occur and by design, do not require Avio in order to operate. These systems are

1. Battery power, and control of electrical contactors
2. Electrical Circuit Protection
3. Oxygen & Passenger Masks
4. Emergency Gear Extension
5. Cabin Pressurization Dump
6. Emergency Locator Beacon

1.5.2 Mechanical Flight Controls

The elevators, ailerons and rudders are all actuated by the pilot through the side sticks and rudder pedals by mans of pushrods, cables, bell cranks and pulleys.

1.6 Audio

1.6.1 Cabin Speakers

The Cabin Speakers are turned off during normal operations. However, by pressing the “SPKR” button on the Pilot’s (the left side) keyboard, the COM1/COM2 audio is sent to the Pilot’s speaker. By pressing the “SPKR” button again, the Pilot’s cabin speaker is turned off. An LED positioned just above the SPKR button on the Keyboard is illuminated to indicate that the speaker is selected. The volume control on the Pilot’s keyboard can be used to adjust the speaker volume.

The Copilot’s keyboard controls the audio sent to the Copilot’s speaker in the same manner as the Pilots controls.

Speaker functionality is outlined in Section 15.9 “Keyboard”

1.6.2 Handheld Microphones

There are two hand held microphones (Pilot’s and Copilot’s). Each handheld microphone has a built-in Push-To-Talk switch. There is a separate handheld microphone jack on each of the flight crew ’s armrests so that the handheld microphones (used primarily as backup for the headset microphones) can remain plugged in along with the headset or boom microphones.

The left handheld microphone is permanently wired to the Left PFD, and the right handheld microphone is permanently wired to the Right PFD. The COM SOURCE switch located on the left switch panel does not affect these microphones; they always remain connected to the on-side PFD.

When a member of the flight crew pushes the handheld Push-To-Talk button, the microphone audio is transmitted over COM1 or COM2, depending on the flight crew/member’s radio selection.

1.7 Emergency Equipment

1.7.1 Fire Extinguisher

In the event of a cabin or cockpit fire a “BC” rated halon fire extinguisher is located below the throttle quadrant. The safety pin should be checked prior to flight and may be retained with a plastic band to prevent inadvertent fire extinguisher activation. The halon extinguishing agent may make breathing difficult and use of the fire extinguisher should be accompanied with the use of an oxygen mask and smoke goggles (if available).

Fire Extinguisher

1.7.2 Emergency Exits

The aircraft has a designated emergency exit located on the right side of the aircraft to be used in the event that the primary (left-side) exit is rendered unavailable. This door weighs approximately 12 lbs. To open the door:

- Remove the cover
- Pull the red handle to release the door
- Pull the door in to rotate approximately 90°
- Place door through exit hatch and discard on aircraft wing.

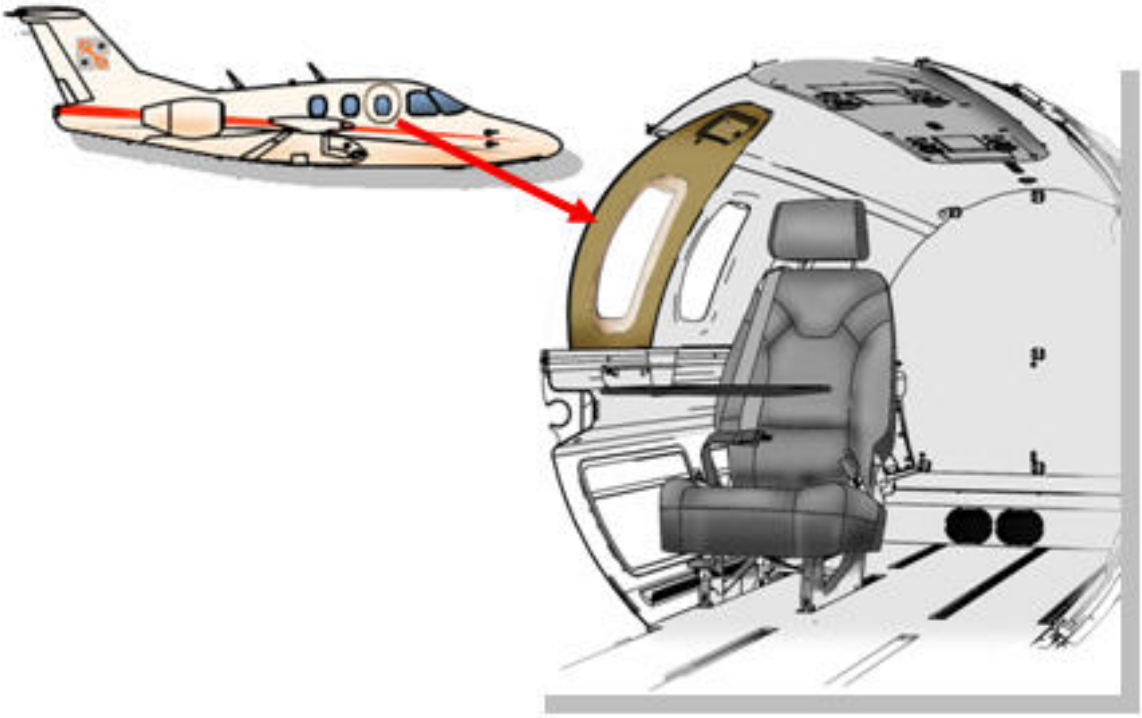

Emergency Exit

1.7.3 Oxygen

The airplane is equipped with an oxygen system for use by the pilots and passengers in the event of a loss of cabin pressurization or presence of smoke or fumes in the cockpit. The Eclipse 500 is equipped with either a 22 cubic foot oxygen bottle or an optional 40 cubic foot oxygen bottle. The 40 cubic foot bottle option also includes a right pilot seat quick donning mask. There are four constant flow oxygen masks for the rear passenger seats as well as a constant flow oxygen mask for the right front passenger/pilot seat.

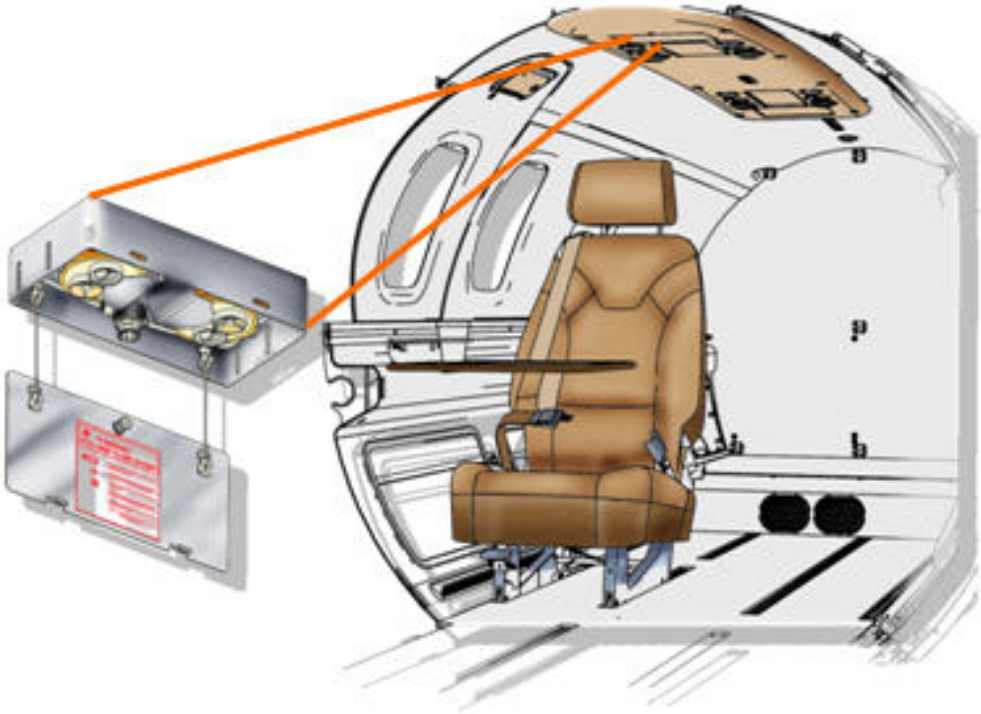

Passenger Oxygen