CHAPTER 18 – NAVIGATION SYSTEMS

LIST OF ILLUSTRATIONS

AIR TRAFFIC CONTROL TRANSPONDER SYSTEM

TRAFFIC ALERT AND COLLISION AVOIDANCE SYSTEM

GROUND PROXIMITY WARNING SYSTEM

WEATHER RADAR SYSTEM

THIS PAGE INTENTIONALLY LEFT BLANK

1. INTRODUCTION

The navigation systems contain the radios and controls used for navigation purposes. The navigation systems provided are as follows:

- Flight Management System (FMS) <1214>
- Global Positioning System (GPS) <1027>
- VHF Navigation (VNAV)
- Automatic Direction Finder (ADF)
- Distance Measuring Equipment (DME)
- Air Traffic Control Transponder System (ATC)
- Traffic Alert and Collision Avoidance System (TCAS)
- Enhanced Ground Proximity Warning System (EGPWS) <2040>
- Weather Radar System (WXR)

The two separate VHF systems provide for radio navigation. They have been designed and installed so that the failure of one system does not prevent the operation of the other. Both systems are connected to the onside and cross-side flight compartment displays and controls.

The navigation receivers are tuned by two radio tuning units and navigation data is displayed on the primary flight displays (PFDs) and multifunctional displays (MFDs).

Frequency selection is accomplished through two radio tuning units. In the event of a failure of one or both radio tuning units, radio communication and navigation can be controlled by a backup tuning unit.

Display control panels permit control over the multifunctional display format, navigation source and bearing source display.

Audio monitoring is provided by three audio control panels.

THIS PAGE INTENTIONALLY LEFT BLANK

1. FLIGHT MANAGEMENT SYSTEM

NOTE

For complete flight management system operating instructions, refer to the FMS-4200 Pilot's Guide

The flight management system (FMS) provides lateral navigation with advisory vertical guidance, flight plan creation and monitoring, enroute map display support, autopilot steering commands and control signals, radio navigation and radio communication tuning and control, and non-precision approach lateral navigation.

The FMS consists of two flight management computers and two control display units located in the center console. The flight management computers collect information from the navigation sensors and perform all computations, control and command functions. The control display units provides the pilot interface for data input and control functions, and provides display of functions, modes and flight data. Pictorial data is displayed on the multifunctional displays. A data loader is used to transfer data to and from the FMS. <1214>

The system uses all available sensors and provides the pilot with control of which sensors are used in the position computation. If no sensor data is available, the system continues to estimate a dead reckoning position using heading and true airspeed.

FMS Performance Database

The FMS performance database is advisory only.

Climb, cruise, and descent performance information stored in the FMS database allows the crew to predict time and remaining fuel at each waypoint of the flight plan, destination and alternate destination.

The performance data given in Flight Planning and Cruise Control Manual corresponds to the FMS database as follows:

Flight Planning and Cruise Control Manual	Performance Database Part Number
CSP C-015 (Metric Version) Revision 1, Jun 12/02	815-5913-001

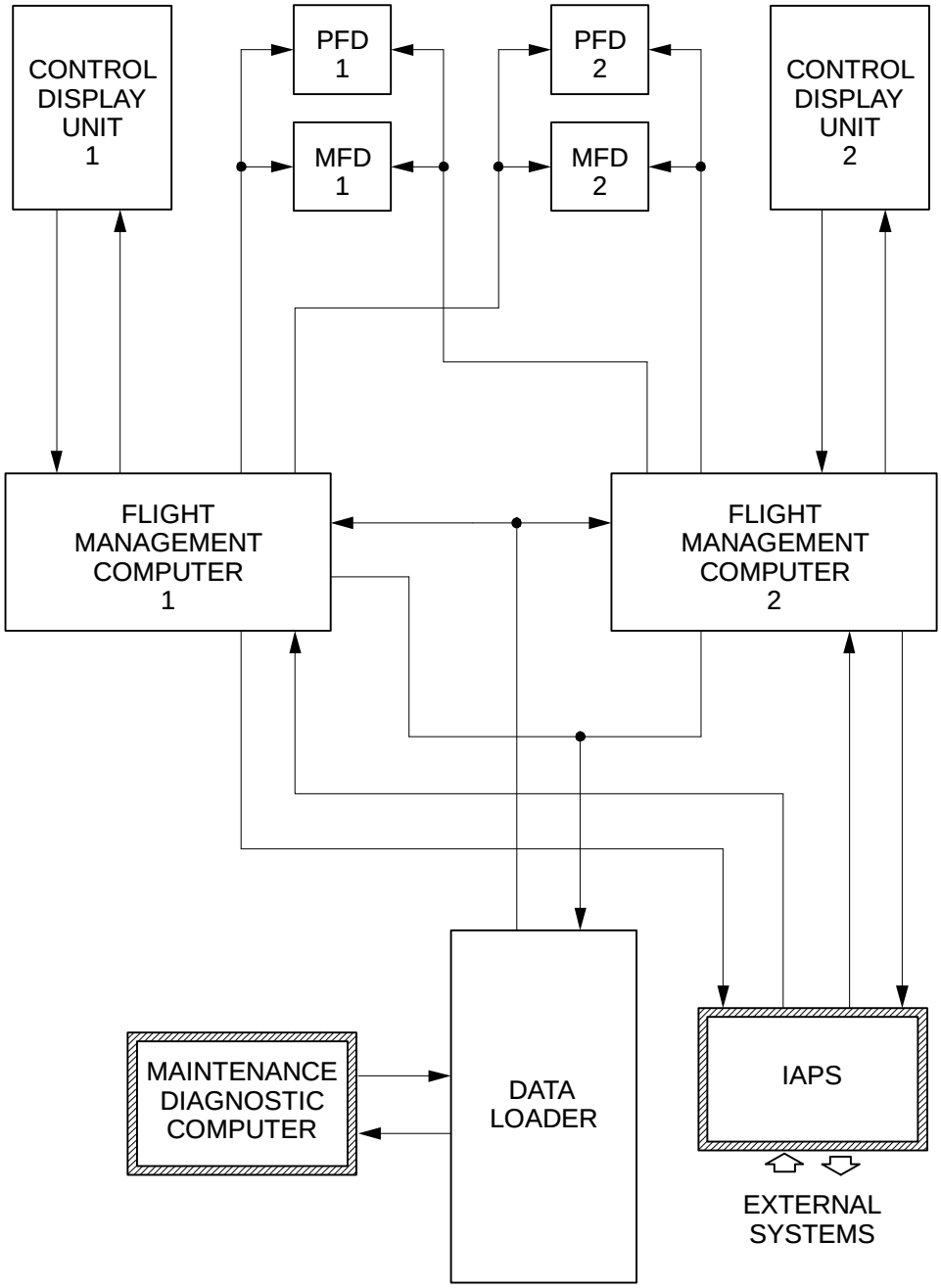

Flight Management System Block Schematis <1214>
Figure 18–20–1

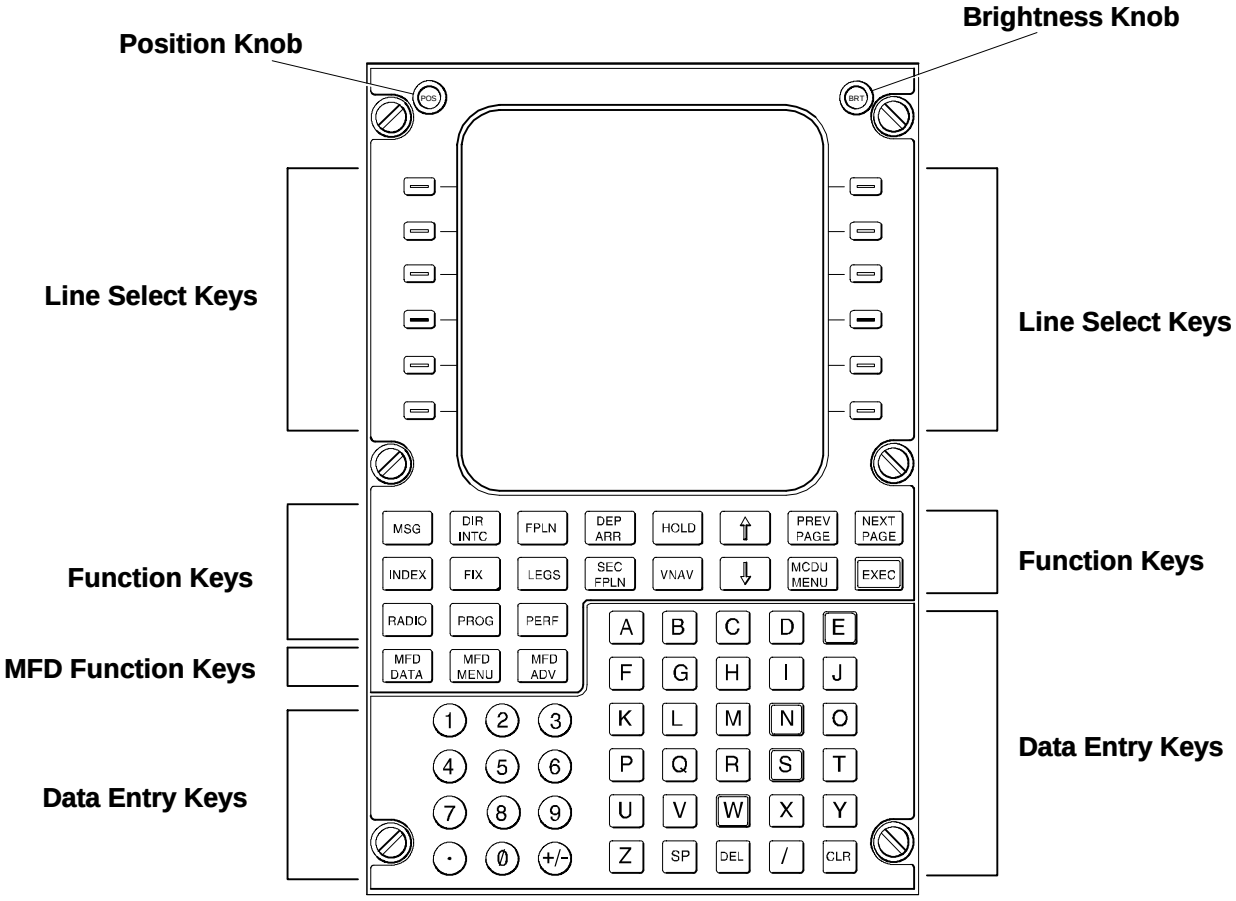

Control Display Unit
Center Pedestal (Upper)

Flight Management System Control Display Unit<1214>
Figure 18–20–2

A. System Circuit Breakers

SYSTEM	SUB-SYSTEM	CB NAME	BUS BAR	CB PANEL	CB LOCATION	NOTES
Flight Management System	Control Display Unit	CDU 1	DC BUS 1	1	H9	

1. GLOBAL POSITIONING SYSTEM <1027>

The Global Positioning System (GPS) is a satellite navigation system that computes the position of the aircraft relative to orbiting satellites. The GPS provides highly accurate three-dimensional position, velocity and time information to the integrated avionics processor system (IAPS).

The GPS consists of two antennas and two receivers. The antennas supply signals to their respective receivers. The receivers process the signals and supply continuous navigation updates to the inertial reference system (IRS) and to the flight management system (FMS). The FMS uses the GPS and other available navigation and position sensors to provide navigation, position information and guidance. <1212><1025><1027>

The FMS control display units provides the pilots with access to GPS data and control settings. GPS information is displayed on the multifunctional displays. For more information, refer to the FMS Pilot's Guide. <1214>

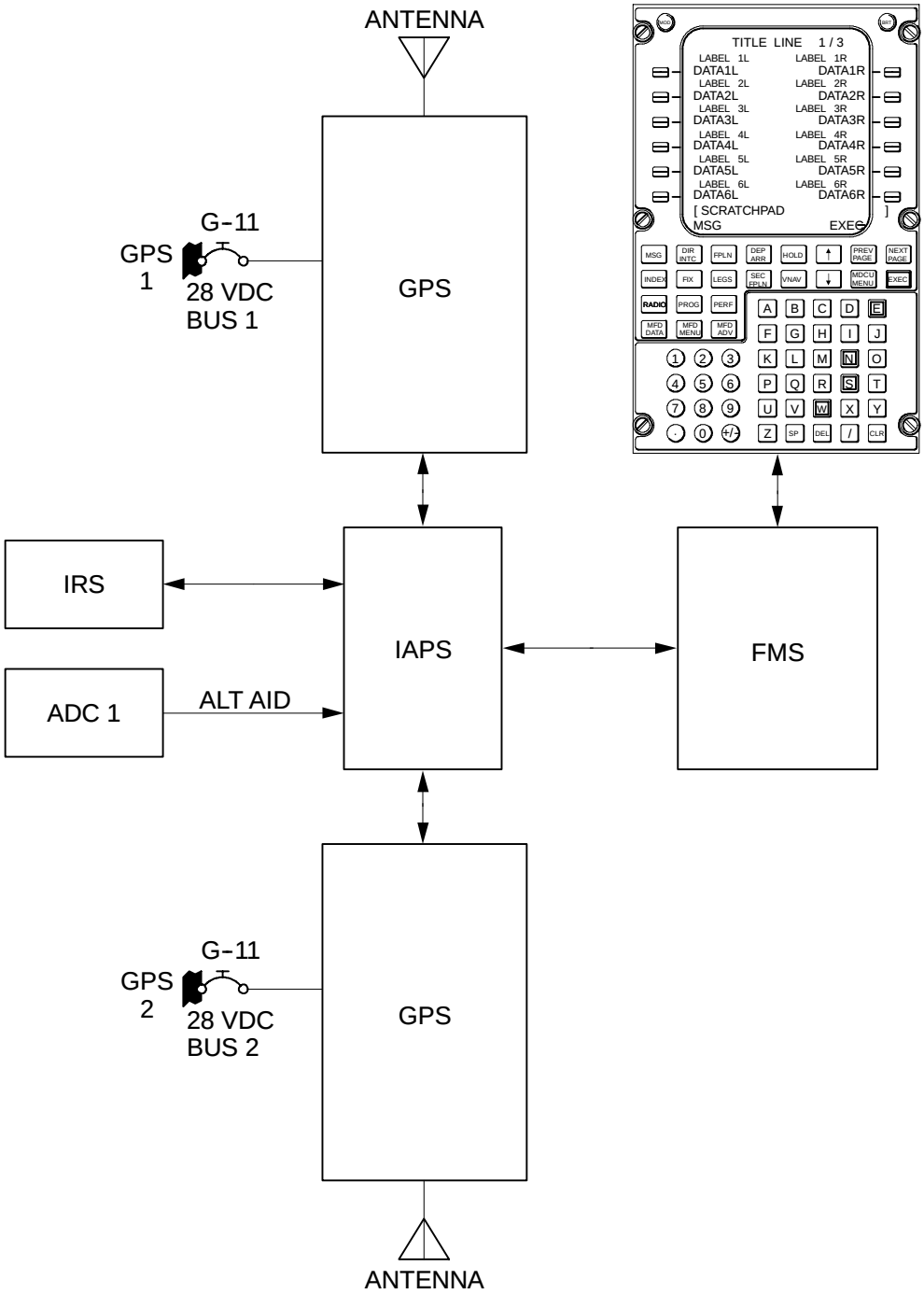

Dual Global Positioning System <1025,1027,1212>
Figure 18-25-1

A. System Circuit Breakers

SYSTEM	SUB-SYSTEM	CB NAME	BUS BAR	CB PANEL	CB LOCATION	NOTES
Global Positioning System	Receiver	GPS 1	DC BUS 1	1	G11	
		GPS 2	DC BUS 2	2	G11	<1027>

THIS PAGE INTENTIONALLY LEFT BLANK

1. VHF NAVIGATION

There are two VHF navigation systems installed on the aircraft and are identified as VHF/NAV 1 and VHF/NAV 2. The systems provide the following functions:

- VHF omnidirectional range (VOR)
- Localizer/glideslope (LOC/GS)
- Marker beacon (MB)

The VHF/NAV receivers are installed in the avionics compartment and contain the logic to control the VOR/LOC receiver, glideslope receiver and the marker beacon receiver.

Frequency tuning and mode selection is done by two radio tuning units (RTU), a single backup tuning unit or the FMS control display unit. The radio tuning units are the primary radio communication system radio tuning source (Refer to Chapter 05-30-01 for additional information).

The VOR/LOC receivers operate in the following frequency ranges:

- VOR frequencies - All even frequencies from 108.00 to 111.90 MHz and all frequencies from 112.00 to 117.95.
- LOC frequencies - All odd frequencies from 108.10 to 111.95 MHz

The NAV receivers monitor the selected VOR stations and provide enroute and terminal area navigation. The VOR data is displayed on the pilots and copilots PFD and MFD.

In LOC and GS modes, the NAV receivers supply final approach guidance data. Localizer signals are monitored for horizontal deviation and glideslope signals are monitored for vertical deviation. When the the navigation receiver is tuned to a localizer frequency, the paired glideslope frequency is automatically tuned. The LOC/GS data is displayed on the pilots and copilots PFD and MFD.

The Marker Beacon system provides information on distance to the runway. The MB antennas receive signals from the outer, middle and inner MB ground transmitters. The signals are then supplied to the MB receivers. MB information is displayed on the pilots and copilots PFD. MB sensitivity can be adjusted at the radio tuning units.

The VHF/NAV system also supplies VOR/LOC and MB station identification to the audio integrating system.

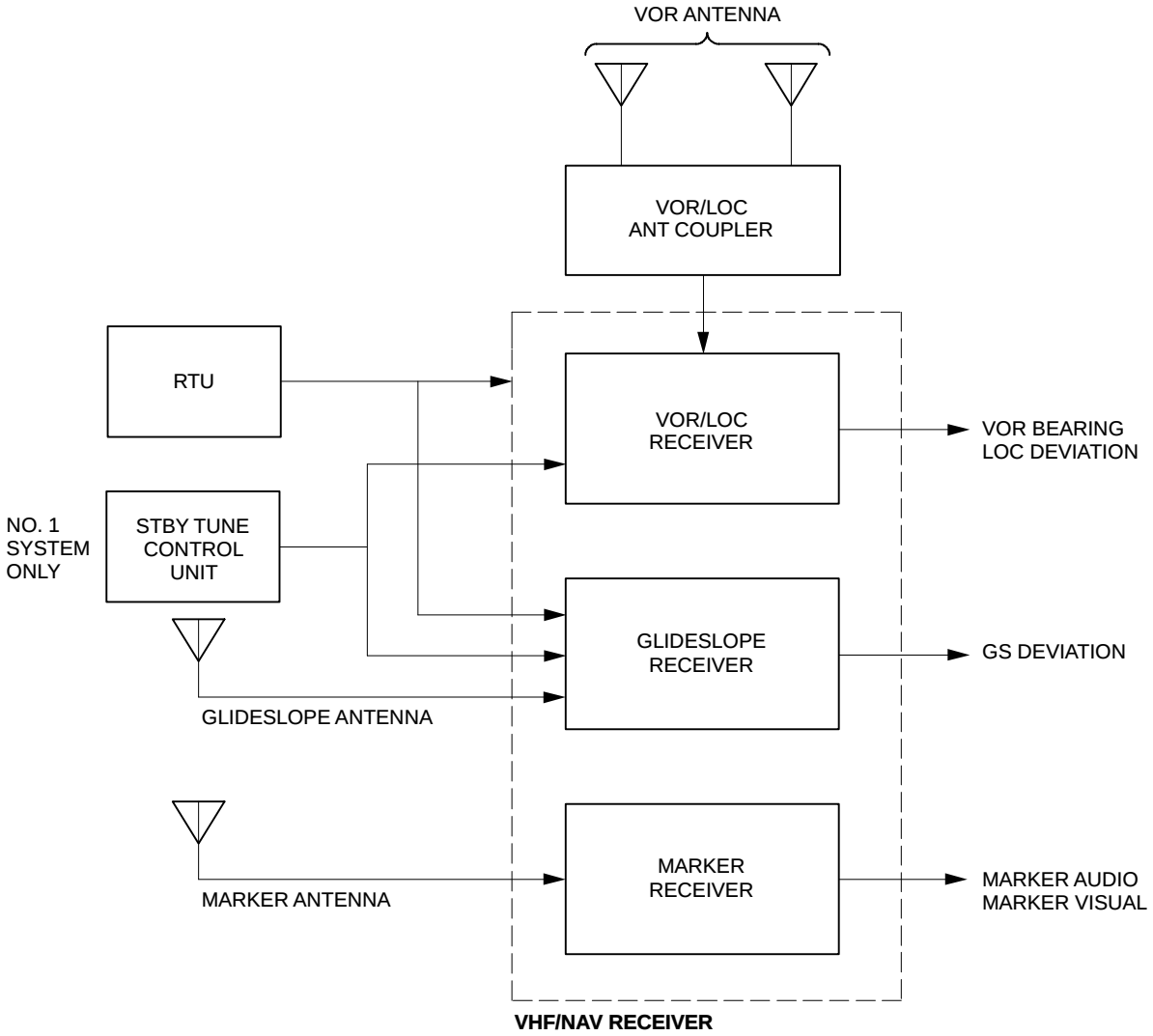

VHF/NAV System
Figure 18–30–1

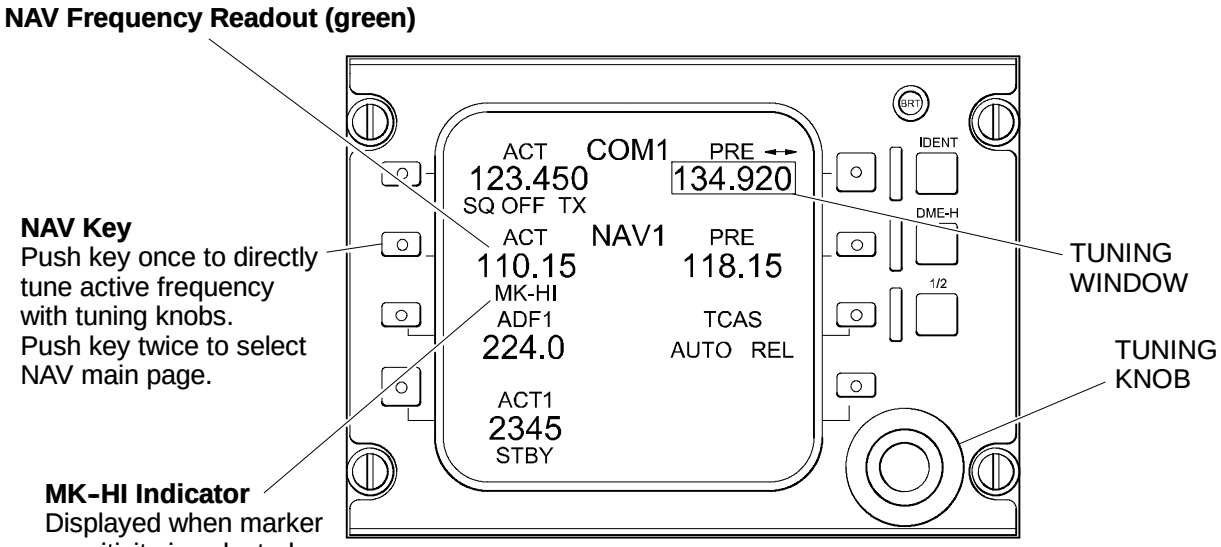

Radio Tuning Unit – Top Level Page
Center Pedestal

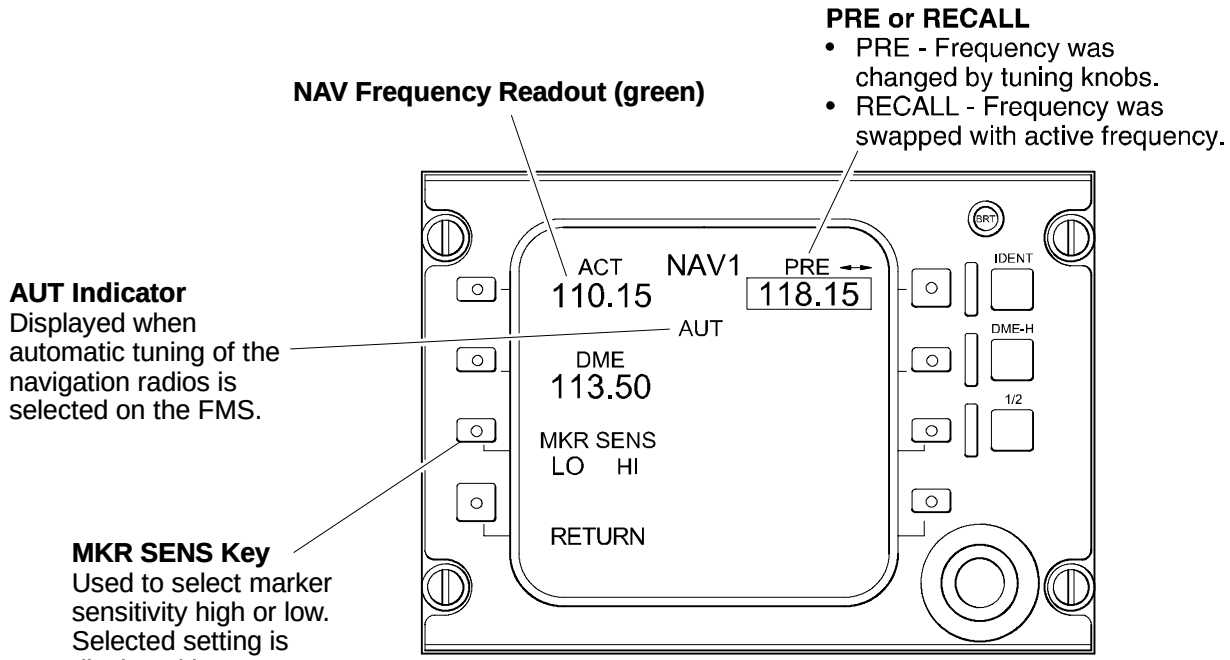

Radio Tuning Unit – NAV Main Page
Center Pedestal

VHF Navigation – Radio Tuning Unit <1012>
Figure 18–30–2

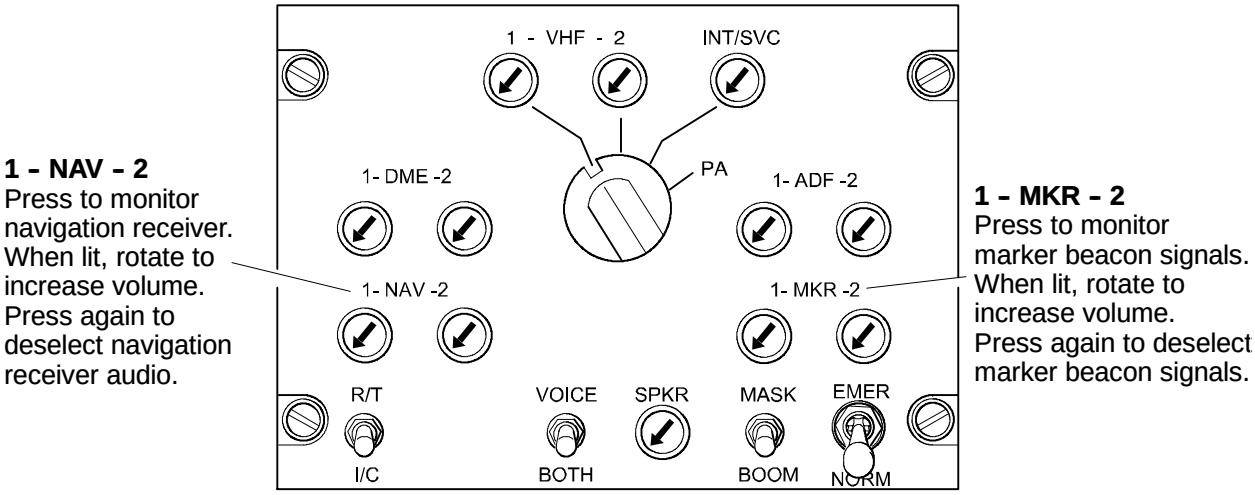

1 - NAV - 2
Press to monitor navigation receiver. When lit, rotate to increase volume. Press again to deselect navigation receiver audio.

1 - MKR - 2
Press to monitor marker beacon signals. When lit, rotate to increase volume. Press again to deselect marker beacon signals.

Audio Control Panel
Center Pedestal

NAV SOURCE
Used to select navigation source. Clockwise rotation will be FMS1, VOR/LOC1, OFF, VOR/LOC2 and FMS2.

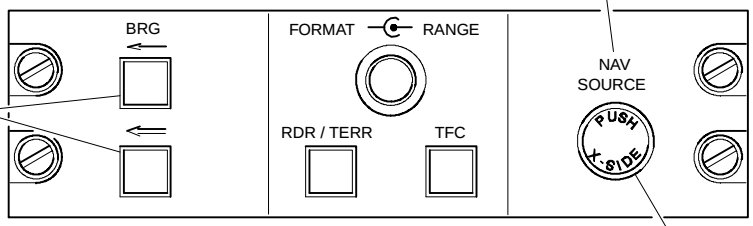

BRG
Used to select next waypoint that bearing pointer will indicate direction to.

Display Control Panel
Pilot's and Copilot's Side Panels

PUSH X-SIDE
Used to display opposite side navigational source on MFD.

VHF Navigation < 2040>
Figure 18-30-3

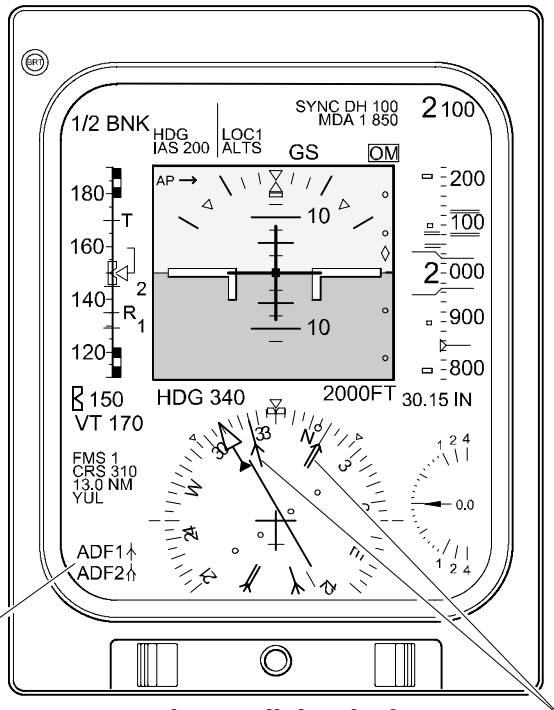

Primary Flight Display
Pilot's and Copilot's Instrument Panels

Bearing Source
Indicates navigation source selected to obtain bearings. Single line (bearing No. 1) is magenta. Double line (bearing No. 2) is cyan.

Bearing Pointers
Indicates direction of selected bearing. Single line (bearing No. 1) is magenta. Double line (bearing No. 2) is cyan.

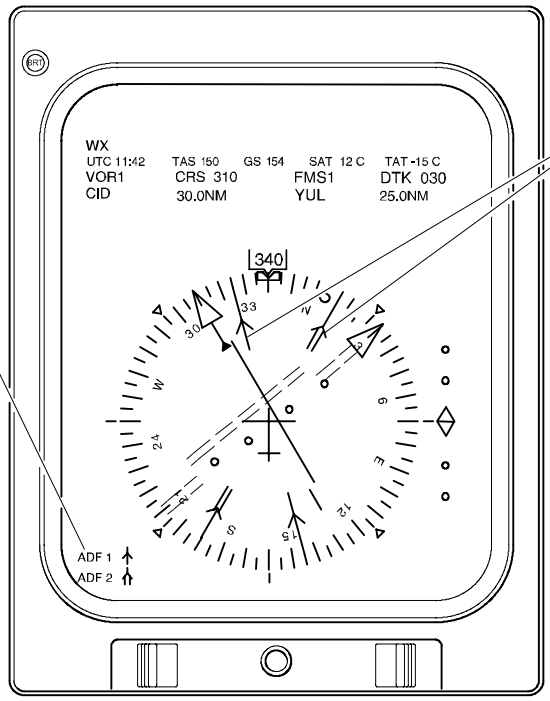

Multifunction Display - HSI Mode
Pilot's and Copilot's Instrument Panels

VHF Navigation Bearing Source<1015>
Figure 18-30-4

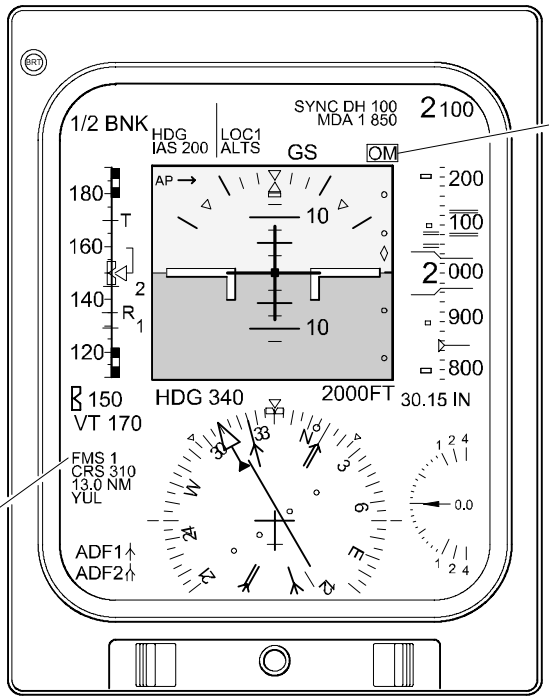

Marker Beacon Indicator

- OM - Outer marker (cyan)
- MM - Middle marker (yellow)
- IM - Inner marker (white)

Navigation Source Indicator
Indicates navigation source setting of navigation source knob on display control panel.

Primary Flight Display
Pilot's and Copilot's Instrument Panels

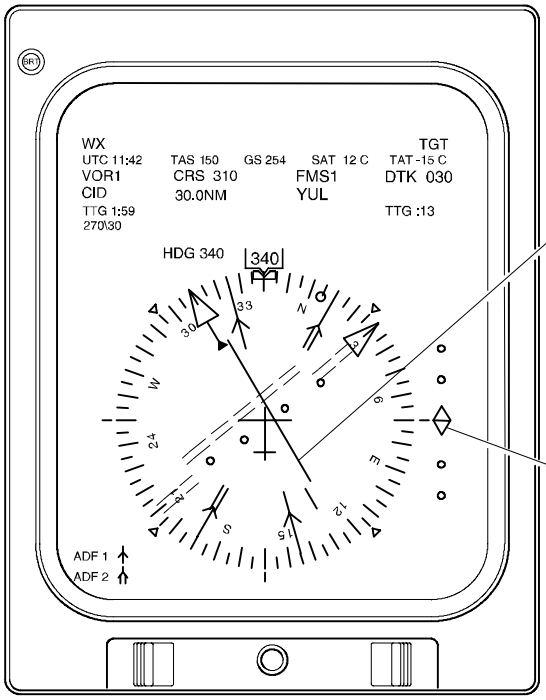

Lateral Deviation Bar
Indicates lateral deviation from selected course. Color matches navigation source.

Vertical Deviation Indicator
Indicates vertical deviation pointer from selected course. Color matches navigation source. Flashes during excessive deviation.

Multifunction Display - HSI Mode
Pilot's and Copilot's Instrument Panels

VHF Navigation Deviation/Source Indication<1015>
Figure 18-30-5

Vertical Deviation Flag (red)
Indicates a glideslope failure when ILS is the navigation source. Vertical deviation scale and pointer are removed.

Lateral Deviation Flag (red)
Indicates a localizer failure when LOC is the navigation source.

Navigation Source Flag (red)
Indicates failure of the selected navigation source.
Lateral deviation scale, lateral deviation bar and to/from indicator are removed.

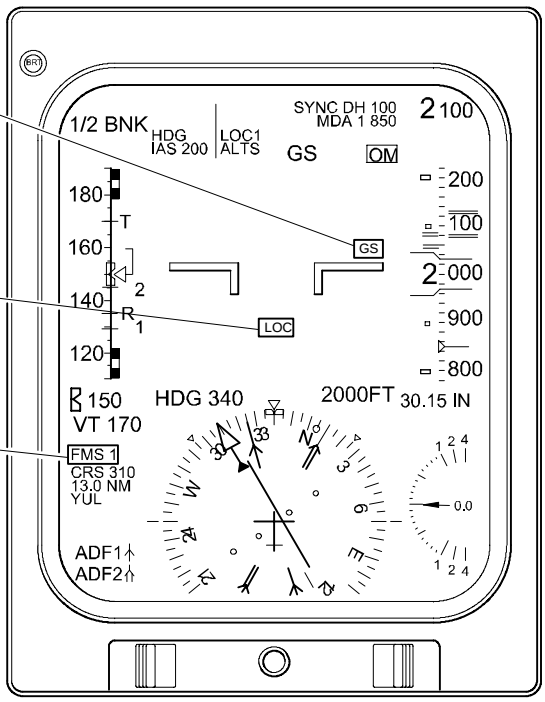

Primary Flight Display
Pilot's and Copilot's Instrument Panels

VHF Navigation Vertical Deviation Flag <1015>
Figure 18–30–6

A. System Circuit Breakers

SYSTEM	SUB-SYSTEM	CB NAME	BUS BAR	CB PANEL	CB LOCATION	NOTES
VHF Navigation	Receiver	VHF NAV 1	DC ESSENTIAL	2	V6	
		VHF NAV 2	DC BUS 2		H11	

1. AUTOMATIC DIRECTION FINDER

The automatic direction finder (ADF) system is a dual, low frequency radio system designated as ADF 1 and ADF 2. The ADF system is used indicate relative bearing from the aircraft to a selected ground station.

The transmitting stations can be nondirectional beacons (NDBs) or standard amplitude modulation (AM) broadcast stations in the frequency range of 190.0 to 1799.5 kHZ. Frequency tuning and ADF mode selections is made through the radio tuning units. Frequency tuning can also be made on the FMS control display unit. Station audio is controlled through the audio control panels.

Bearing selection can be made on either the pilot and copilots display control panel (DCP). The bearing-to-station data is displayed on the HSI portion of the pilot and copilots primary flight display (PFD) and on the multifunctional displays (MFD). in HSI, navaid sector and present position map formats,

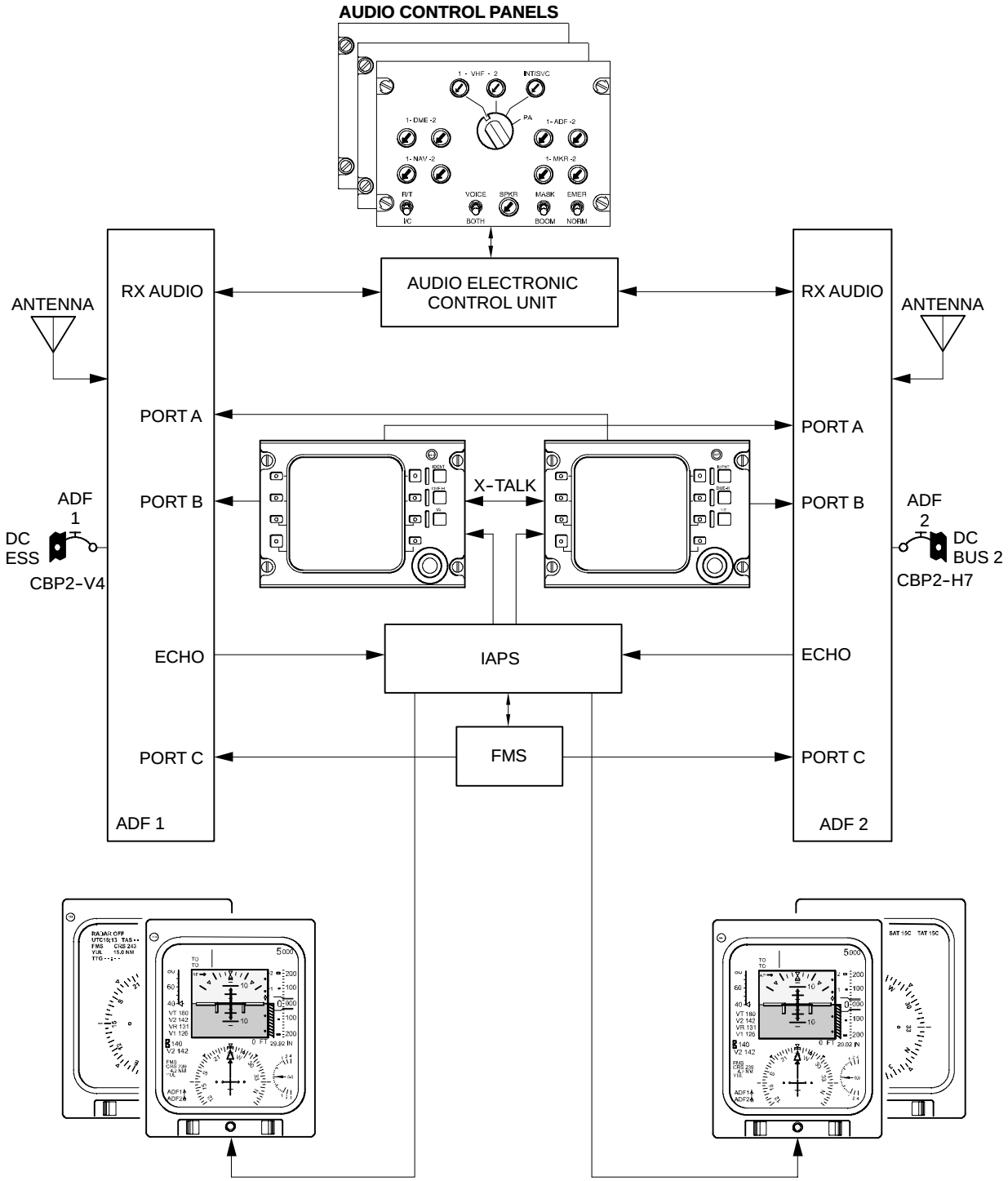

Automatic Direction Finder System Interface <1015>
Figure 18-40-1

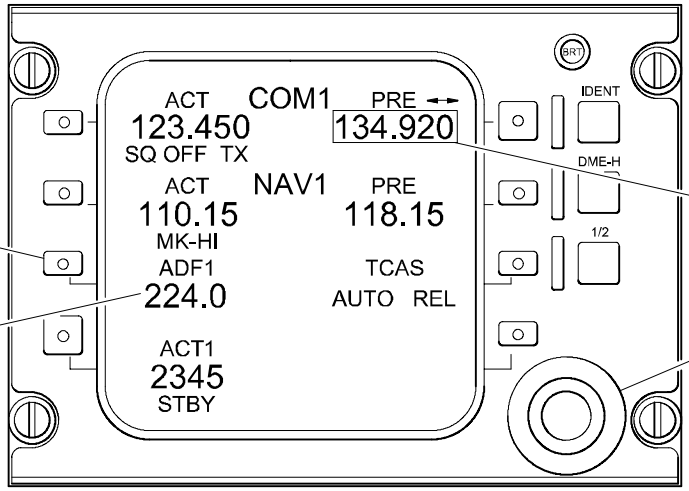

Radio Tuning Unit – Top Level Page
Center Pedestal

ADF Mode Key
Used to select either ADF or antenna functions.
Selected setting is displayed in cyan.
- ANT - Used for range navigation, optimum station tuning, or monitoring commercial broadcast.
- ADF - Used to select directional antenna. Bearing to selected station is displayed as a pointer on the HSI portion of the primary flight display and the multifunction display.

ADF Tone Key
Used to select tone circuit on or off. When selected on, an aural signal is superimposed on the unmodulated carrier wave to aid in precise frequency selection. Selected setting is displayed in cyan.

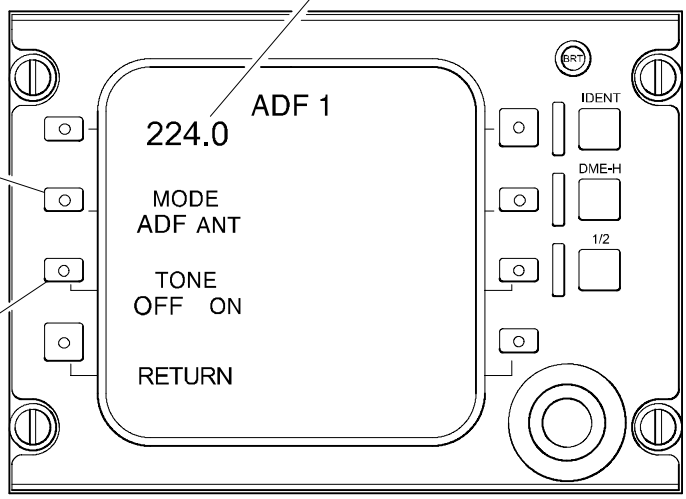

Radio Tuning Unit – ADF Main Page
Center Pedestal

Automatic Direction Finder (ADF) – Radio Tuning Unit <1012>
Figure 18–40–2

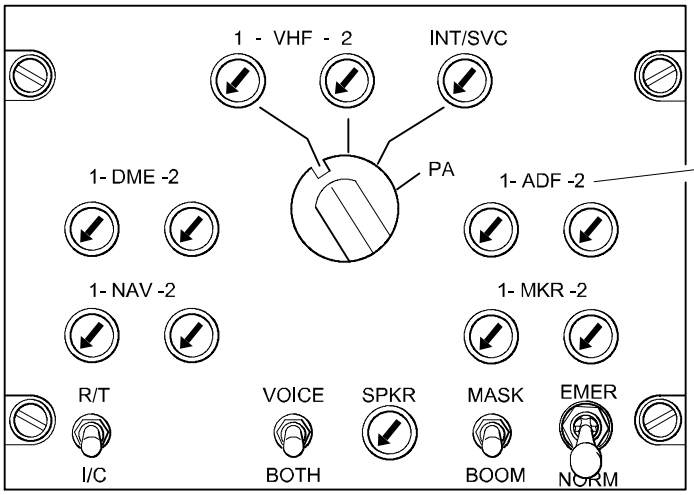

1 - ADF - 2
Press to monitor selected ADF receiver. When lit, rotate to increase volume. Press again to deselect ADF receiver audio.

Audio Control Panel
Center Pedestal

BRG
Used to select next waypoint that bearing pointer will indicate direction to.

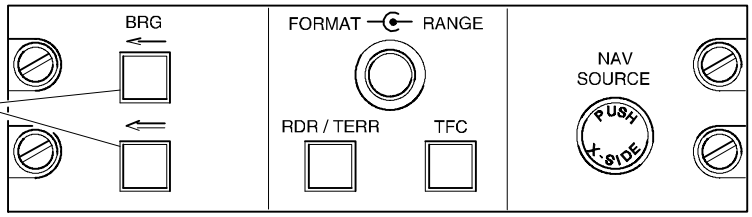

Display Control Panel
Pilot's and Copilot's Side Panels

Automatic Direction Finder – Controls <2040>
Figure 18–40–3

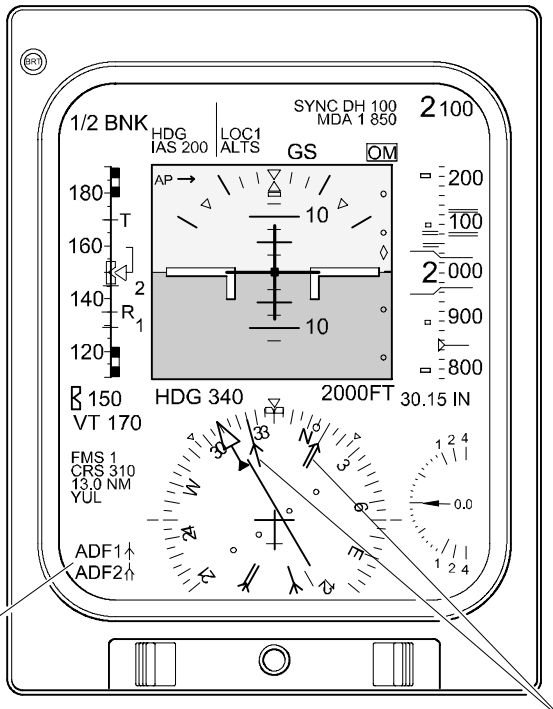

Primary Flight Display
Pilot's and Copilot's Instrument Panels

Bearing Source
Indicates navigation source selected to obtain bearings. Single lined (bearing No. 1) is magenta. Double lined (bearing No. 2) is cyan.

Bearing Pointers
Indicates direction of selected bearing. Single lined (bearing No. 1) is magenta. Double lined (bearing No. 2) is cyan.

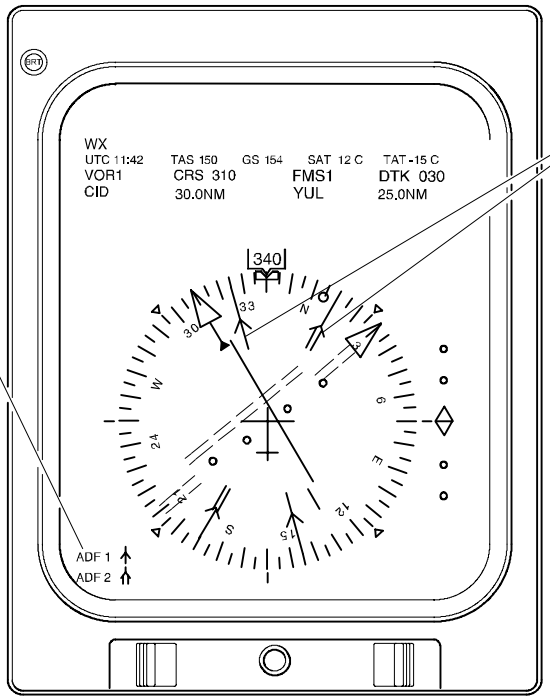

Multifunction Display - HSI Mode
Pilot's and Copilot's Instrument Panels

Automatic Direction Finder – Controls <1015>
Figure 18–40–4

A. System Circuit Breakers

SYSTEM	SUB-SYSTEM	CB NAME	BUS BAR	CB PANEL	CB LOCATION	NOTES
Automatic Direction Finder	Receiver	ADF 1	DC ESSENTIAL	2	V4	
		ADF 2	DC BUS 2		H7	

1. DISTANCE MEASURING EQUIPMENT

There are two identical distance measuring equipment (DME) systems installed in the aircraft. The DME system computes and displays the straight line distance between the aircraft and a selected DME ground station. The DME system also provides ground speed, time to station and station identification.

There are two DME transceivers installed in the avionics compartment that operate in the frequency range of 962 to 1213 MHz with a range of 300 nautical miles. Each transceiver has three channels that can track up to three stations simultaneously. Channel 1 of each DME is paired with the onside VOR and can be manually tuned by either the radio tuning units, backup tuning unit or the FMS. The other two channels are automatically tuned by the FMS for multisensor navigation. If Autotune is selected on the control display unit, the FMS will automatically tune VOR/DME channel 1.

The DME transceivers interrogate the ground stations by transmitting a 63 MHz pulse signal at a specific repetition rate. The ground station replies by transmitting an exact replica of the signal it recieved. When a reply is received by the DME, it measures the elapsed time between transmit signal and the reply, then computes slant distance, ground speed and time-to-go.

DME hold allows the pilot to use DME channel 2 for distance measuring and allows the normally paired VOR frequency of channel 1 to be tuned to a different VOR frequency for bearing information.

Frequency tuning and DME hold selections are through the radio tuning units. The DME frequency channels are paired with the VHF navigation channels. The frequency selection is done with the pilot's or copilot's RTUs in the frequency range of 108.00 to 117.95 MHz. Station audio is monitored through the audio control panels. Visual indications of tuned stations, distance readouts and DME hold indications are provided on the primary flight displays and multifunctional displays.

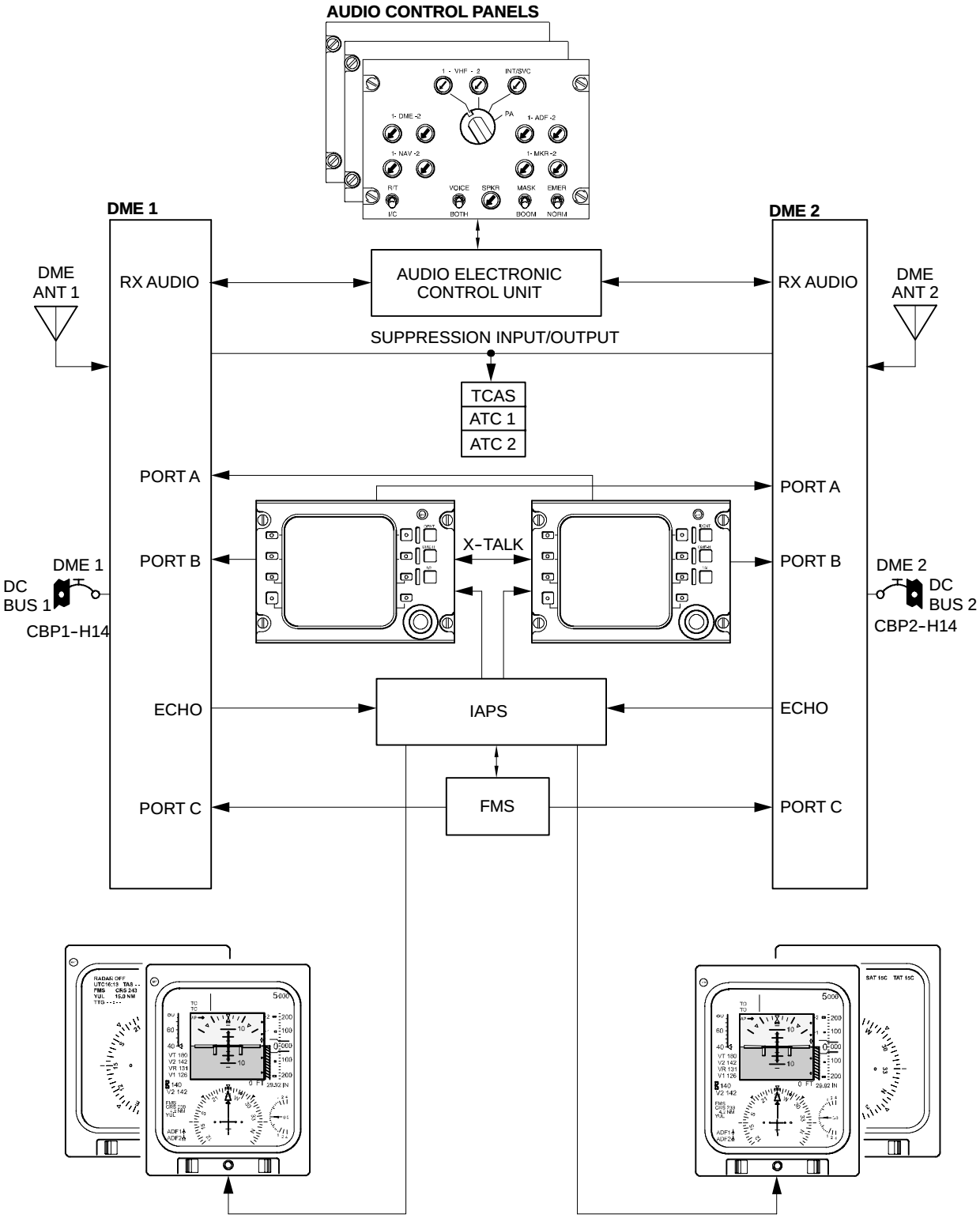

Distance Mesuring Equipment System Interface <1015>
Figure 18–50–1

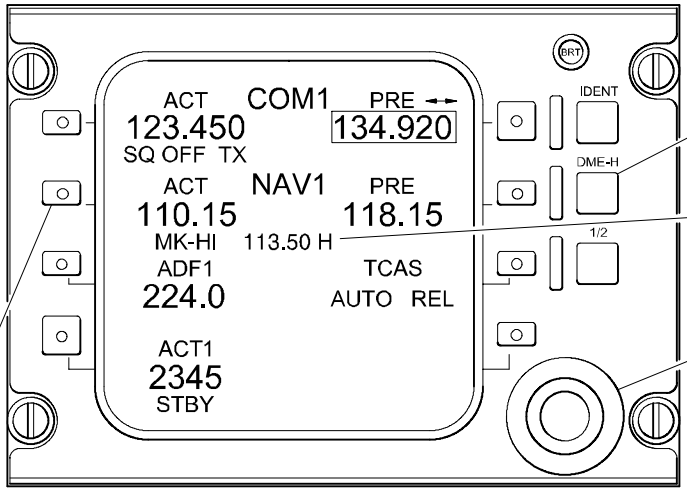

DME-H
Holds DME to current NAV frequency and allows NAV receiver to be independently re-tuned.

DME hold Indicator (yellow)
Displayed when DME hold has been selected.

TUNING KNOB

NAV Key
Push key twice to select NAV main page.

Radio Tuning Unit - Top Level Page
Center Pedestal

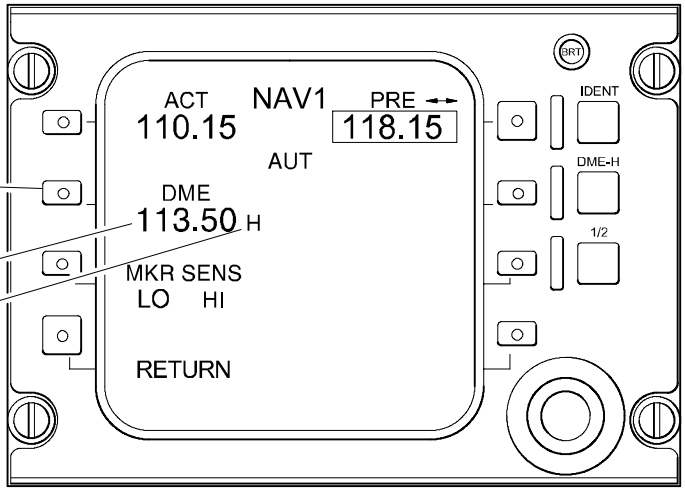

Frequency Change Key
Push key once to directly tune DME transceiver with tuning knob.

DME Frequency Readout (green)

DME hold Indicator (yellow)
Displayed when DME hold has been selected.

Radio Tuning Unit - NAV Main Page
Center Pedestal

Distance Measuring Equipment Radio Tuning Unit<1012>
Figure 18-50-2

1 - DME - 2
Press to monitor selected DME transceiver. When lit, rotate to increase volume. Press again to deselect DME station identification audio.

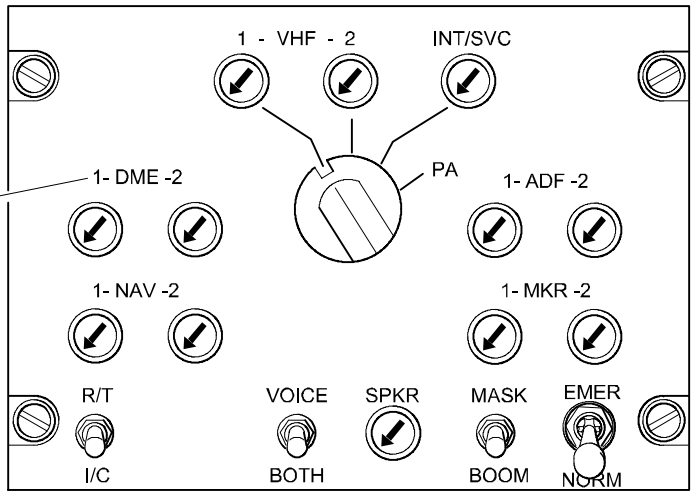

Audio Control Panel
Center Pedestal

Distance Readout
Indicates distance to tuned navaid or next waypoint, in nautical miles. Color matches navigation source.

DME Hold (H) Symbol (yellow)
When DME hold is selected, H replaces NM legend on distance readout. Not displayed if FMS is navigation source.

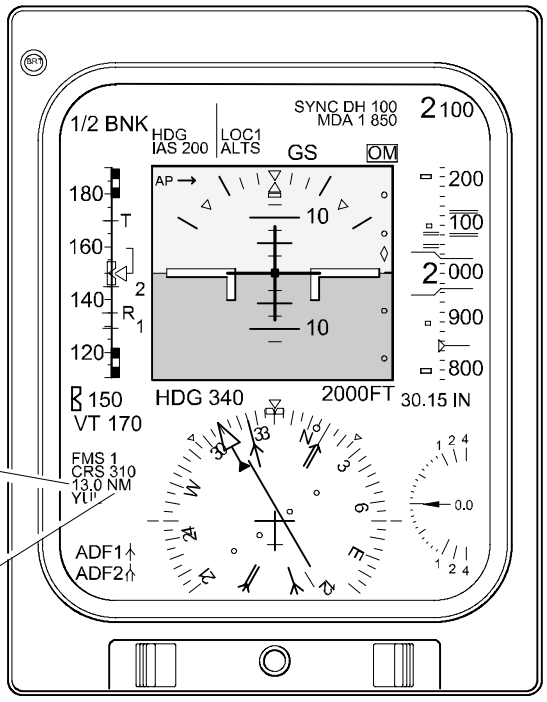

Primary Flight Display
Pilot's and Copilot's Instrument Panels

Distance Measuring Equipment <1015>
Figure 18–50–3

Distance Readout
Indicates distance to tuned navaid or next waypoint, in nautical miles. Color matches navigation source.

Ground Speed Readout (white)
Color of GS prefix matches navigation source.

Time To Go
Indicates time to tuned navaid or next waypoint. Color matches navigation source.

DME Hold (H) Symbol (yellow)
When DME hold is selected, H replaces NM legend on distance readout. Not displayed if FMS is navigation source.

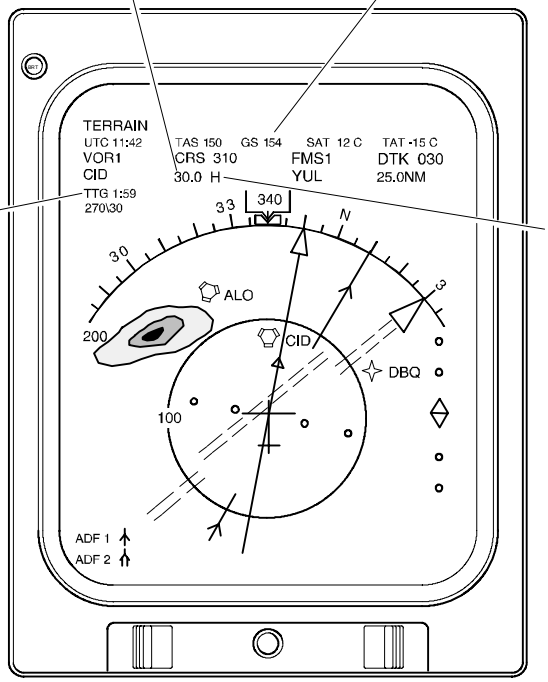

Multifunction Display – Navaid Sector Mode
Pilot's and Copilot's Instrument Panels

Distance Measuring Multifunction Display
Figure 18–50–4

A. System Circuit Breakers

SYSTEM	SUB-SYSTEM	CB NAME	BUS BAR	CB PANEL	CB LOCATION	NOTES
Distance Measuring Equipment	Transceiver	DME 1	DC BUS 1	1	H14	
		DME 2	DC BUS 2	2	H14	

1. AIR TRAFFIC CONTROL TRANSPONDER SYSTEM

The two air traffic control transponders (ATC 1 and ATC 2) provide ground radar beacon systems with coded identification responses in the following modes:

- Mode A – Aircraft identify reporting
- Mode C – Altitude reporting
- Mode Select (S) – Data link with other mode S transponders for the traffic alert and collision avoidance system (TCAS).

Mode S data link includes air-to-air, ground-to-air (data uplink or comm A), air-to-ground (data downlink or comm B), and multisite (ground station to ground station) messages.

Transponder activation is made on the backup tuning unit.

Transponder codes are set on the top level page of the radio tuning units and can also be set using the FMS control display unit. ATC identification is selected using the IDENT button on the radio tuning unit.

ATC SEL
Used to select ATC transponders.
- 1 – ATC 1 transponder is activated and ATC 2 transponder is on standby.
- STBY – Both transponders are on standby.
- 2 – ATC 2 transponder is activated and ATC 1 transponder is on standby.

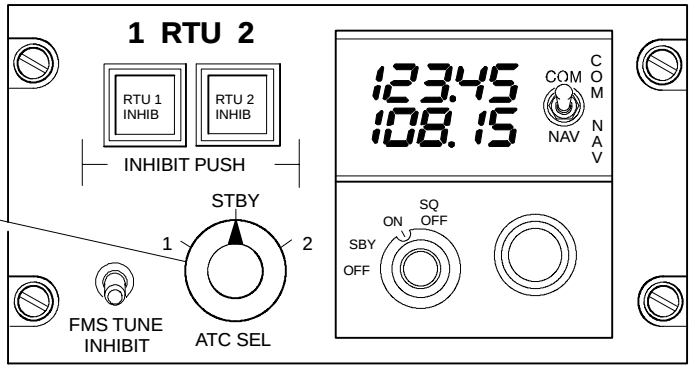

Backup Tuning Unit
Center Pedestal

Air Traffic Control Transponder System – Controls
Figure 18–60–1

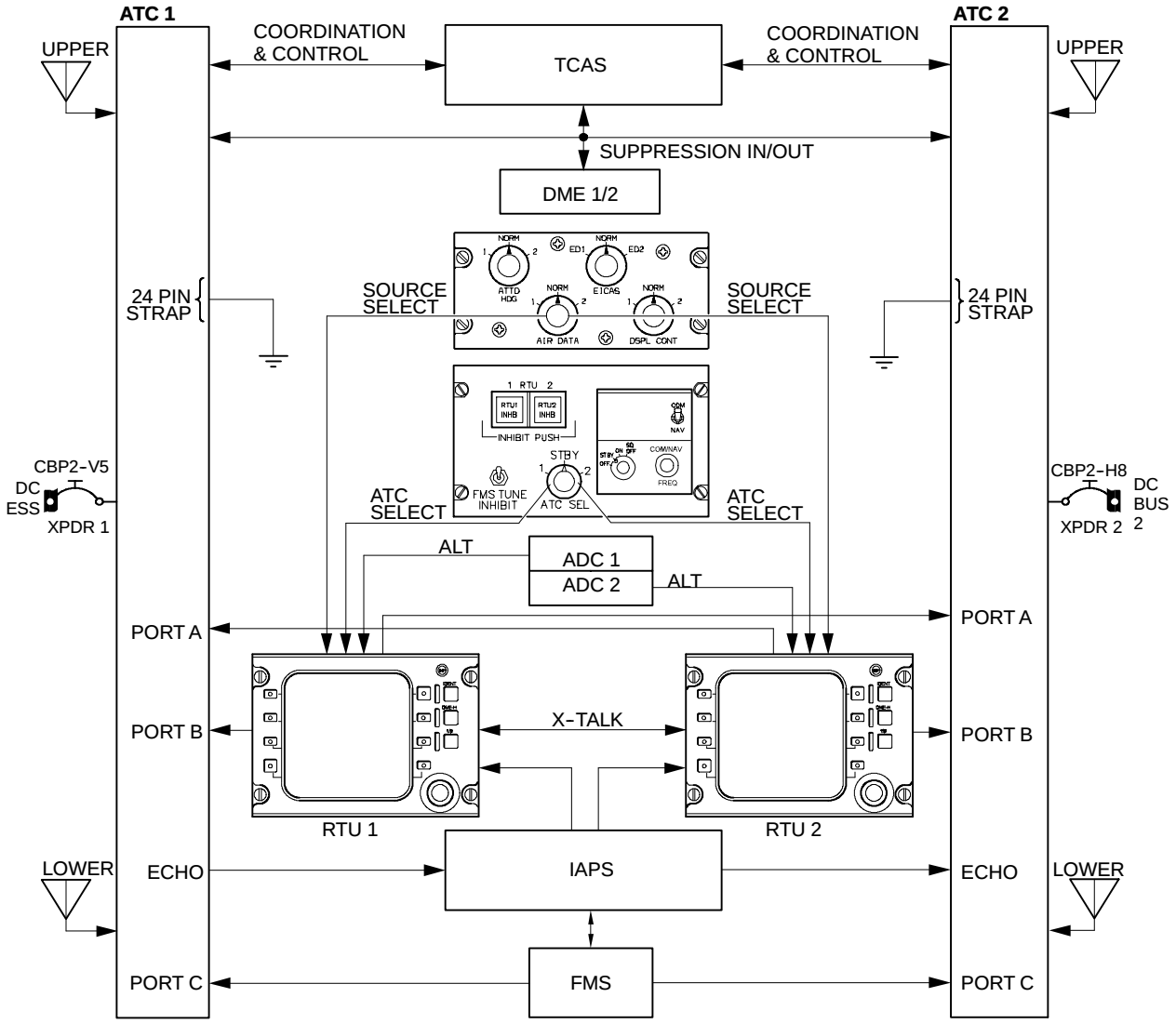

ATC Transponder Interface
Figure 18-60-2

2. MODE S TRANSPONDER (FLIGHT ID) <1096>

Mode S also has the capability to display either a 4-digit squawk code or the flight identification (FLT ID) on line 4 of the RTU Top Level Page. Selection of either the squawk code or the FLT ID for display on the Top Level Page is made on the ATC Main Page.

To access the ATC Main Page from the Top Level Page, the ATC Line Select Key is pressed twice. Once the Main Page is displayed, the DISPLAY Line Select Key is pressed to select either the SQUAWK or FLT ID (the selected function will be displayed larger). The selected function is then displayed on line 3 of the Main Page, line 4 of the Top Level Page and on the FLT ID Page. To modify the squawk code or the FLT ID on the Top Level Page, the ATC Line Select Key is pressed, which will cause a tune window to surround the left character. The small Tuning Knob is then used to change the character displayed in the tune window. The RTU then waits 2 seconds after knob rotation stops before locking in the new character. Rotating the large tune knob cycles the tune window from character to character.

To access the FLIGHT ID Main Page from the ATC Main Page, the FLT ID key is pressed twice. On the FLIGHT ID Main Page, the RTU displays an Active and Preset Flight ID. By pressing the top right line-select key the ACTIVE and Preset FLT ID will swap when the tune window is on a Preset Flight ID character.

The FMS can also display the FLIGHT ID on the ”RADIO TUNING PAGE” page 2 of 2, adjacent to the top right line select key on the CDU. To input the FLIGHT ID data:

(a) Press the top right line select key on the CDU so that the selection box highlights the FLIGHT ID information field.

(b) Input the FLT ID data, via the CDU keypad, where it will appear on the bottom left corner of the page (in brackets).

(c) After the FLT ID has been inputted, press the top right line select key and check that the proper FLT ID appears adjacent to the top right line select key.

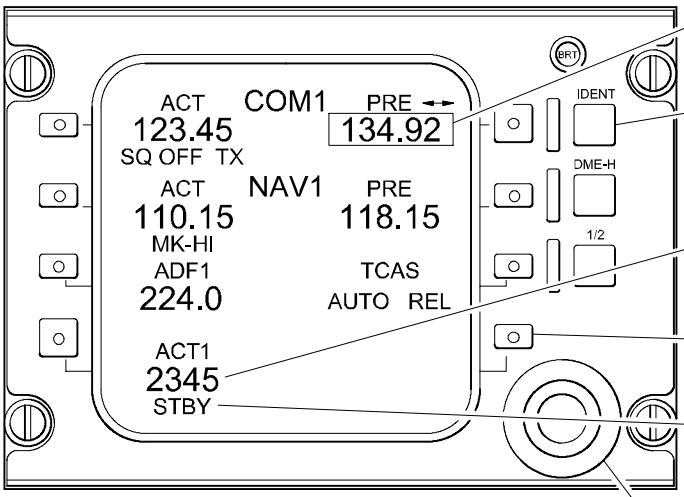

Tuning Window (white)

IDENT
Pushed at ATC request; causes an additional identification pattern on ATC ground radar screen.

Transponder Code (green)
Turns white when selected to standby.

ATC Key
Push key once to tune frequency with tuning knob. Push key twice to select ATC main page.

Mode Messages (cyan)
- STBY – Both transponders are in standby mode. Code turns white.
- ALT OFF – Mode C selected off.
- ID – Identification has been selected.
- R – Transponder is responding to an interrogation.

Tuning Knob

Radio Tuning Unit – Top Level Page
Center Pedestal

Air Traffic Control Transponder System – Radio Tuning Unit
Figure 18–60–3

Mode C, altitude reporting selection is made on the ATC main page of the radio tuning unit.

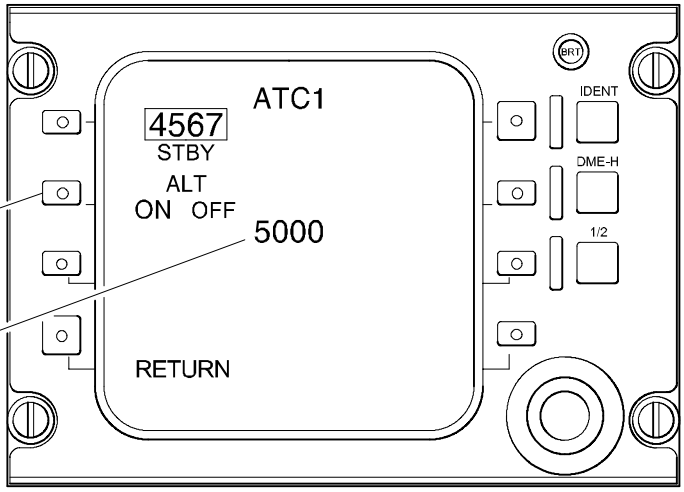

Altitude Reporting
Used to turn altitude reporting feature on and off. Selected setting is displayed in cyan.

Reported Altitude

Radio Tuning Unit – ATC Main Page
Center Pedestal

Air Traffic Control Transponder System –
Radio Tuning Unit – ATC Main Page
Figure 18–60–4

A. System Circuit Breakers

SYSTEM	SUB-SYSTEM	CB NAME	BUS BAR	CB PANEL	CB LOCATION	NOTES
Air Traffic Control	Transponder	XPDR 1	DC ESSENTIAL	2	V5	
		XPDR 2	DC BUS 2		H8	

THIS PAGE INTENTIONALLY LEFT BLANK

1. TRAFFIC ALERT AND COLLISION AVOIDANCE SYSTEM

The traffic alert and collision avoidance system (TCAS) is an airborne system that interrogates the air traffic control transponders of nearby aircraft to identify and display potential and predicted collision threats. TCAS surveillance range is up to 40 nautical miles and can detect and track up to 30 aircraft simultaneously. The system computes range, bearing and closure rates of other transponder equipped aircraft.

A mode “S” Transponder is installed on the aircraft. The transponder provides air-to-air communications for coordinating the resolution maneuvers between TCAS equipped aircraft. The TCAS system provides no indication of traffic conflicts if the intruder aircraft is without an operative transponder.

TCAS provides symbology that depicts surrounding airplanes in terms of relative altitude, range, clock position, and vertical rate. The flight compartment displays also provide data on closure rates. The system displays four types of traffic.

TCAS DISPLAY THREAT LEVELS AND DATA TAGS

SYMBOL	COLOR	THREAT LEVEL	THREAT LEVEL DEFINITION	CAUSE
+01 ↓ ■	RED	Resolution Advisory (RA)	Intruding aircraft 25 seconds from closest point of approach	Intruding aircraft is above by 100 feet and descending at least 500 feet per minute
+00 ●	AMBER	Traffic Advisory (TA)	Intruding aircraft 40 seconds from closest point of approach	Intruding aircraft level with and not climbing or descending
◆ -12 ↑	CYAN	Proximate Traffic	Any traffic within surveillance range and ±1,200 feet vertical	Traffic below 1,200 feet and climbing at least 500 feet per minute
+27 ↓ ◇	CYAN	Other Traffic	Any traffic within TCAS range limit	Traffic above 2,700 feet and descending at least 500 feet per minute

Traffic Collision Avoidance System – Threat Level and Data Tags
Figure 18–70–1

The display control panels are used to activate TCAS and to set range display. Weather radar data can be overlaid on the multifunctional display, in TCAS mode.

TCAS mode and altitude format are displayed on the top level page of the radio tuning units and can also be overlaid on any map display. Testing and setting changes are made on the TCAS main page.

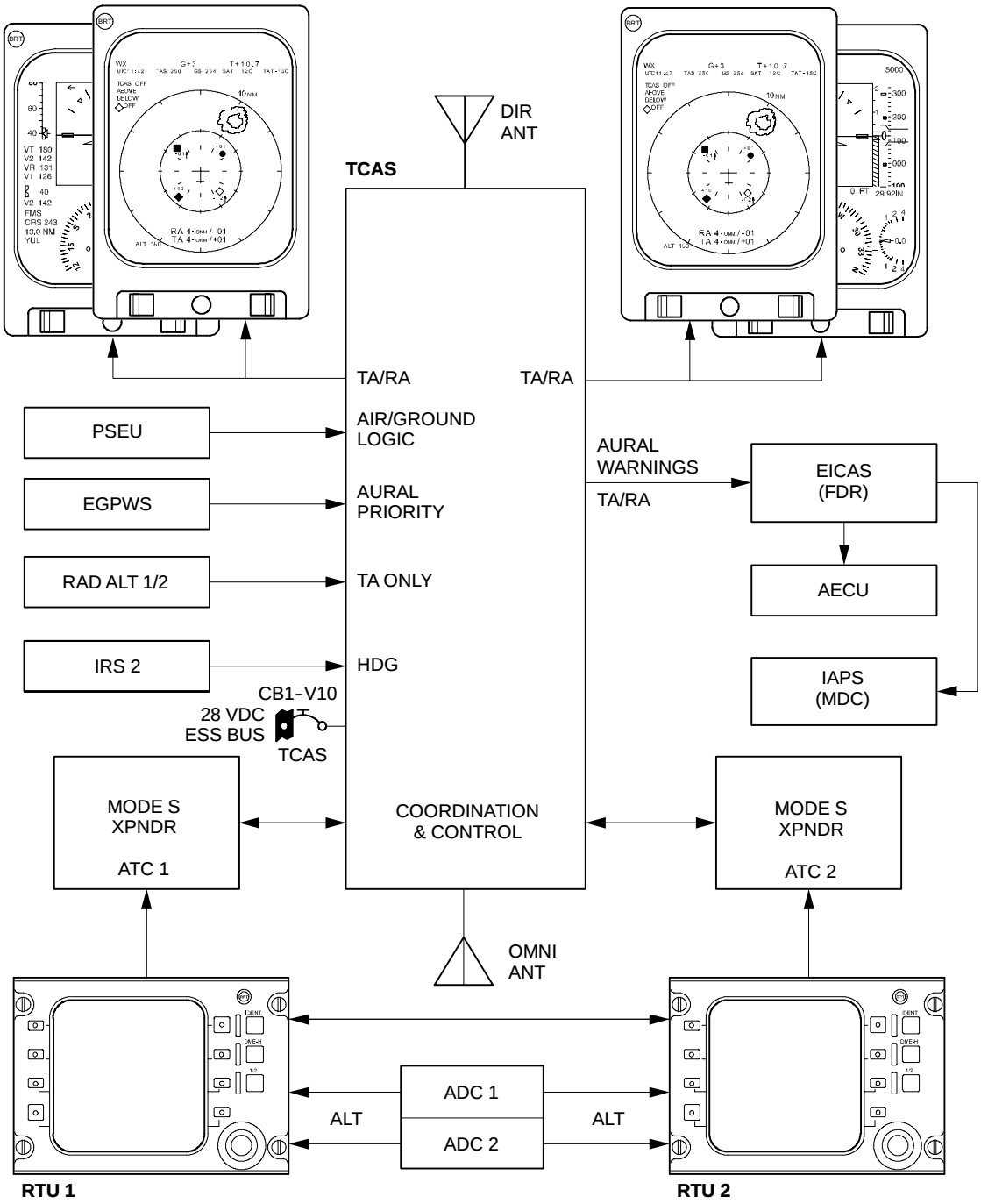

Traffic Colision Avoidance System Interface
Figure 18–70–2

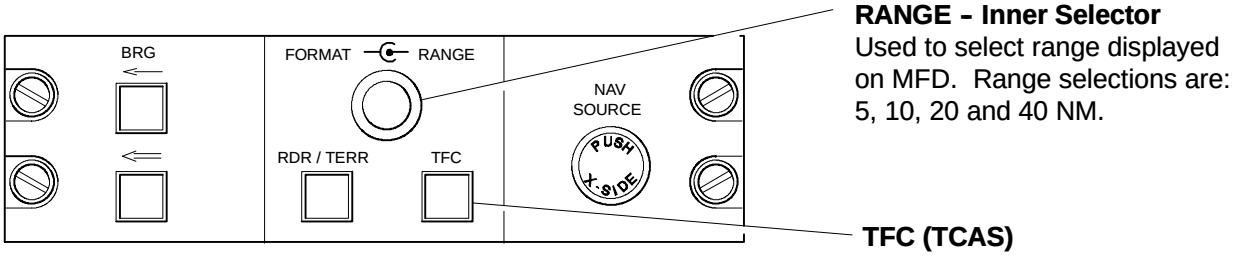

Display Control Panel
Pilot's and Copilot's Side Panels

Traffic Collision Avoidance System – Controls <2040>
Figure 18–70–3

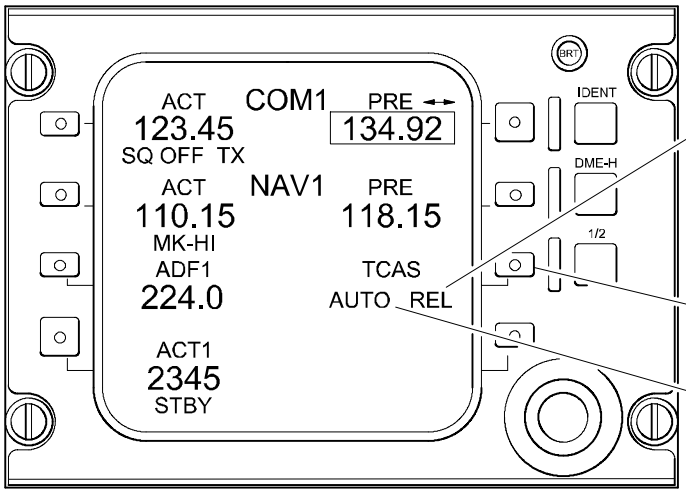

Altitude Format (cyan)
Displays the selected altitude format. (relative or absolute)

TCAS Key
Used to select TCAS main page.

TCAS Mode (cyan)
Displays the selected TCAS mode.

Radio Tuning Unit – Top Level Page
Center Pedestal

Mode Selection
Used to select TCAS mode. Selected mode is displayed in cyan.
- AUTO – All advisories are displayed.
- STBY – All interrogations are inhibited.
- TA ONLY – Only traffic advisories are displayed.

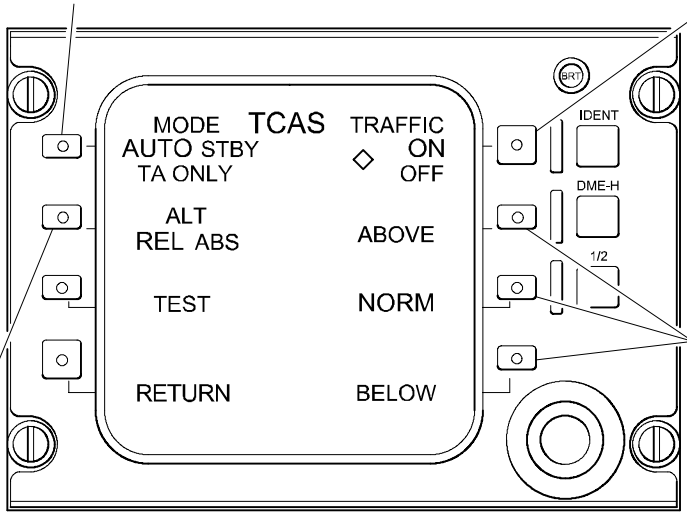

Traffic Selection
Used to select traffic display mode. Selected setting is displayed in cyan.
- ON – Displays all transponder traffic (advisory, proximate and others).
- OFF – Displays advisory traffic only.

Altitude Range
Used to select surveillance airspace relative to own air plane altitude. Selected setting is displayed in cyan.
- ABOVE – 9,900 feet above and 2,700 feet below.
- NORM – 2,700 feet above and below.
- BELOW – 2,700 feet above and 9,900 feet below.

Radio Tuning Unit – TCAS Main Page
Center Pedestal

Altitude Format
Used to select altitude format.
- REL – Relative to own airplane altitude.
- ABS – Absolute with respect to barometric altitude.

Traffic Collision Avoidance System – Radio Tuning Unit
Figure 18–70–4

A. Traffic Advisory

The traffic advisory (TA) is issued to indicate the relative positions of intruding airplanes that are about 45 seconds from the closest point of approach.

The traffic advisory allows the flight crew an opportunity to visually locate the intruding aircraft. The advisory is always displayed on the PFDs or can be displayed on the TCAS page of the MFD if selected from the display control panel.

Traffic advisory will be displayed automatically when the airplane is 1000 feet or below, and will revert to pre-selected mode automatically when the airplane is above 1000 feet.

B. Resolution Advisory

Resolution advisories (RA) will direct the flight crew to resolve a threat by executing an aircraft maneuver that will increase separation. This occurs when the TCAS computer predicts that the intruding aircraft is within about 30 seconds from the closest point of approach.

Resolution advisories are displayed on the vertical speed indicator (VSI) portion of the PFD. The VSI shows the appropriate vertical maneuver to avoid the threat. The VSI provides vertical guidance to maintain safe vertical separation as follows:

- Corrective RAs – Fly from the red zone to the green zone.
- Preventive RAs – Do not fly into the red zone.

The vertical maneuver is also accompanied by TCAS voice warnings.

NOTE

The TCAS resolution advisory programs are based on the pilot initiating the RA maneuver within approximately 5 seconds. If an additional corrective resolution advisory is issued (e.g. a reversal), the maneuver must be initiated within 2.5 seconds.

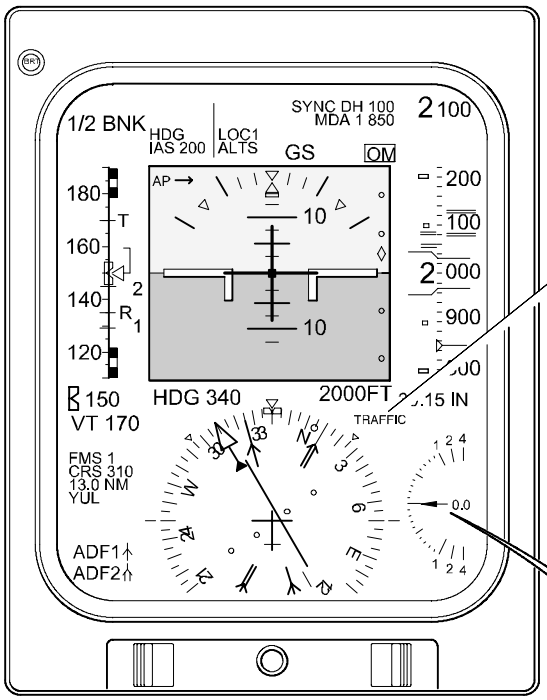

Primary Flight Display
Pilot's and Copilot's Instrument Panels

TCAS Message Area

- TRAFFIC (red) – Indicates TCAS resolution advisory (flashes for first 10 seconds).
- TRAFFIC (amber) – Indicates TCAS traffic advisory (flashes for first 10 seconds).
- TCAS FAIL (amber) – Indicates TCAS system failure.
- TCAS RA FAIL (amber) – Indicates PFD is unable to display TCAS resolution advisory.
- TA ONLY (white) – Indicates that TCAS has been selected to traffic advisory only mode, or has been automatically selected when the aircraft is below 1,000 feet. Flashes amber when traffic advisory is present.
- TCAS OFF (white) – Indicates that TCAS has been selected to standby mode.
- TCAS TEST (white) – Indicates that TCAS system is in test.

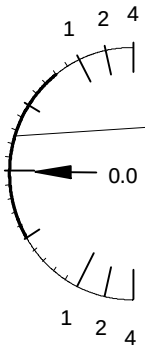

Resolution Advisory
Arc on vertical speed scale displays collision avoidance instructions.

- Red band – Range to be avoided.
- Green band – Target range or range to be maintained.

NOTE:

Vertical speed pointer and readout turn red when a TCAS resolution advisory is issued and speed is not within corrective limits.

Traffic Collision Avoidance System – Primary Function Display Indications <1015>
Figure 18–70–5

TCAS Mode (white)
Displays mode selected on radio tuning unit.
- TCAS OFF – Mode selected to standby.
- TA ONLY – Mode selected to traffic advisory only.

Altitude Range (white)
Displays altitude range selected on radio tuning unit.

Range Readout (white)
Indicates range selected at the display control panel.

TCAS TEST (white)
Indicates TCAS system is in test.

TCAS FAIL (amber)
Indicates TCAS system failure.

TCAS DISPLAY FAIL (amber)
Indicates TCAS display mode is not available.

TCAS No Bearing Table
Displayed when intruder bearing information can not be detected or calculated. Indicates intruder type, range and altitude. Traffic advisory displayed in amber and resolution advisory displayed in red. Only two nearest intruders are displayed.

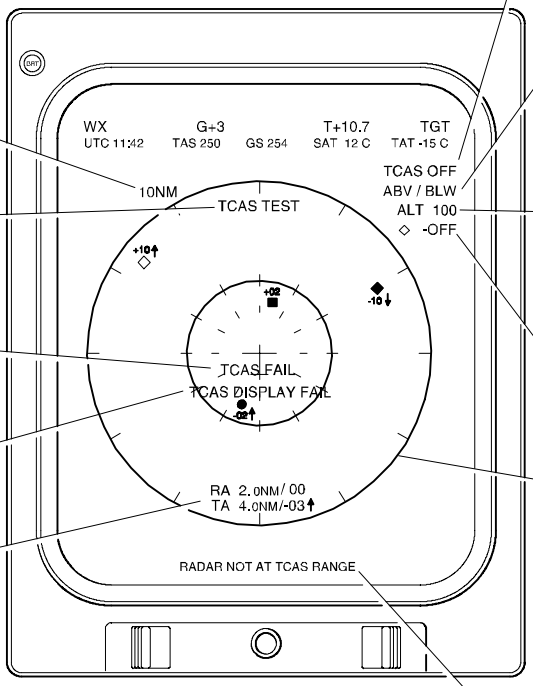

Multifunction Display – TCAS Mode
Pilot's and Copilot's Instrument Panels

Current Altitude (white)
Displays current altitude in thousands of feet, when altitude format is selected to absolute.

Traffic Selection (white)
Displayed when other traffic is selected off.

Range Rings (white)
Outer ring indicates range selected at the display control panel. Inner ring indicates half range (not available at 5 NM range selection). Inner markings indicate 3 mile range (not available at 40 NM range selection).

RADAR NOT AT TCAS RANGE (cyan)
Weather radar control has been transferred and range disagrees with TCAS range.

NOTES

1. Weather radar can be displayed on the MFD when in TCAS mode (range: 5,10, 20 and 40 nm).
2. TCAS can be overlaid on any map display mode.
3. During an electrical transient, TCAS display range may default to 10 nm.

Traffic Collision Avoidance System – Multifunction Display Indications
Figure 18–70–6

C. Aural Warning

The system provides appropriate aural warnings to the flight crew when the TCAS computer analysis of an aircraft signal predicts a penetration of TCAS protected airspace. The voice warnings cannot be cancelled or reduced in volume.

TA voice warning is TRAFFIC – TRAFFIC

RA voice warnings are:

- CLIMB, CLIMB, CLIMB
- DESCEND, DESCEND
- MONITOR VERTICAL SPEED
- CLIMB – CROSSING CLIMB, CLIMB – CROSSING CLIMB
- DESCEND – CROSSING DESCEND, DESCEND – CROSSING DESCEND
- INCREASE CLIMB, INCREASE CLIMB
- INCREASE DESCENT, INCREASE DESCENT
- CLIMB – CLIMB NOW, CLIMB – CLIMB NOW
- DESCEND – DESCEND NOW, DESCEND – DESCEND NOW
- MAINTAIN VERTICAL SPEED, MAINTAIN
- MAINTAIN VERTICAL SPEED, CROSSING MAINTAIN
- ADJUST VERTICAL SPEED, ADJUST

The clear advisory is CLEAR OF CONFLICT

Test voice messages are TCAS SYSTEM TEST OK or TCAS SYSTEM TEST FAIL.

D. System Circuit Breakers

SYSTEM	SUB-SYSTEM	CB NAME	BUS BAR	CB PANEL	CB LOCATION	NOTES
Traffic Alert and Collision Avoidance System	Transmitter / Receiver	TCAS	AC ESSENTIAL	1	V10	

THIS PAGE INTENTIONALLY LEFT BLANK

1. ENHANCED GROUND PROXIMITY WARNING SYSTEM (EGPWS) <2040>

The enhanced ground proximity warning system (EGPWS) is used to help prevent accidents caused by unsafe flight maneuvers in proximity of terrain or severe windshear. The EGPWS computer generates alerts and warnings by comparing the actual aircraft position (programmed by the FMS) to terrain features and obstacles that are stored in the computer database. The aural alerts, messages and visual annunciations are generated when the boundaries of the following alerting envelopes are exceeded: <2040>

- Mode 1 Excessive descent rate
- Mode 2 Excessive terrain closure rate
- Mode 3 Altitude loss after take-off
- Mode 4 Unsafe terrain clearance
- Mode 5 Below glideslope alert
- Mode 6 Callouts (descent below minimums, altitude callouts and bank angle alert)
- Mode 7 Windshear detection and alerting
- Terrain clearance floor and terrain / obstacle awareness alerting and display

Radar or terrain information is displayed on the multifunctional displays by pressing the RDR/TERR button on the display control panel.

NOTE

In the event of a momentary loss of AC electrical power, the TERRAIN FAIL status message may be displayed while the GPS satellites are reacquired (approximately 75 seconds) and the FMS aircraft position is re-entered.

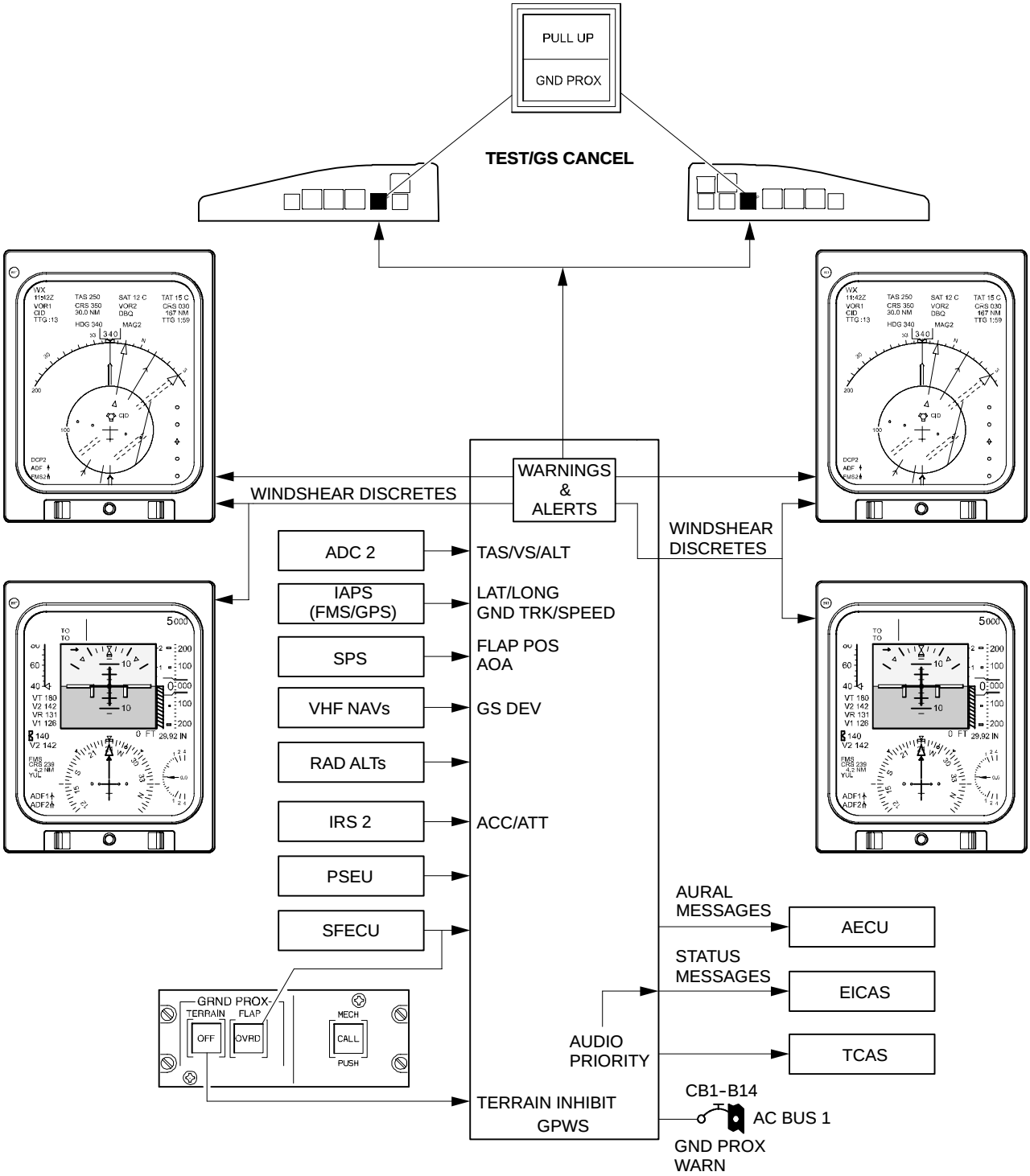

Ground Proximity Warning System Interface Diagram <1015, 1025,2040>
Figure 18–80–1

NOTE

The GRND PROX TERRAIN switch should be selected OFF when within 15nm of an airport that has no approved instrument approach procedures or an airport that is not in the GPWS database.

Ground Proximity Warning Panel
Centre Pedestal

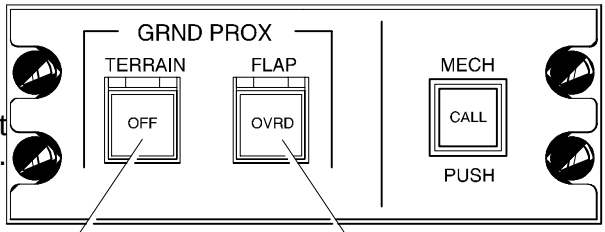

GRND PROX TERRAIN (Guarded)
Used to inhibit the terrain map display (terrain clearance floor and terrain / obstacle awareness alerting and display functions). Basic GPWS modes (1-6) and windshear mode (7) remain active.
- OFF light indicates inhibit is selected.

GRND PROX FLAP (Guarded)
Used to mute TOO LOW FLAPS or TERRAIN aurals.
- OVRD light indicates override is selected.

PULL UP / GND PROX
PULL UP - Flashes (red) during ground proximity warnings. Will stop flashing when airplane has recovered from warning envelope.
GND PROX - Flashes (amber) during ground proximity cautionary alerts. Will stop flashing when airplane has recovered from the caution envelope. Switch is also used to initiate GPWS system test (on ground), or to provide the glideslope cancel function (when airborne).

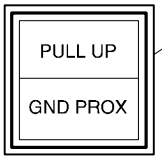

Left and Right Glareshield

RDR / TERR
Used to alternately select or deselect a radar or terrain on the MFD display.

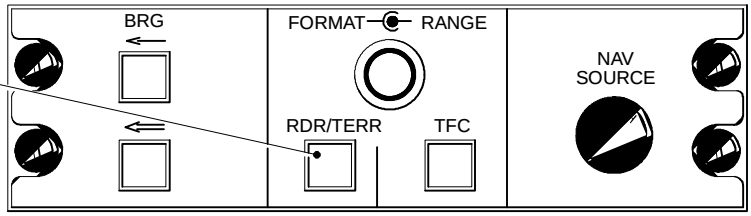

Display Control Panel
Pilot's and Copilot's Side Panels

Ground Proximity Warning System <2040>
Figure 18-80-2

A. Mode 1 - Excessive Descent Rate

Mode 1 is used for the approach phase of flight and is independent of the aircraft configuration. Mode 1 alerts are generated when the aircraft has an excessive descent rate close to the terrain. Mode 1 has two boundaries. Penetration of outer boundary activates the GND PROX lights and generates a SINKRATE, SINKRATE aural alert. Penetrating the inner boundary activates the PULL UP lights and the repeated (WHOOP, WHOOP) PULL UP aural, until the inner warning boundary has been exited. <2040>

B. Mode 2 - Excessive Terrain Closure Rate

Mode 2 alerts are generated when the aircraft is closing with terrain at an excessive rate. Mode 2 has two sub-modes referred to as Mode 2A and Mode 2B.

Mode 2A is active during climbout, cruise, and initial approach (flaps not in landing configuration and the aircraft is not on glideslope centerline). Penetrating the outer boundary activates the GND PROX lights and generates the TERRAIN, TERRAIN aural. Continued penetration of the envelope will activate the PULL UP lights and generate a repeated (WHOOP, WHOOP) PULL UP aural. <2040>

Upon leaving the PULL UP warning area, if terrain clearance continues to decrease, the TERRAIN aural will be generated until terrain clearance stops decreasing. The GND PROX lights will remain on until 300 feet of barometric altitude has been achieved, or 45 seconds has elapsed, or the GND PROX FLAP OVRD has been selected, or the flaps are in a landing configuration. <2040>

Mode 2B is activated when flaps are in landing configuration, when making an ILS approach with glideslope and localizer deviation less than 2 dots, and for the first 60 seconds after take-off. Penetration of the Mode 2B boundary with either gear or flaps not in a landing configuration, activates the GND PROX lights and generates a TERRAIN, TERRAIN aural. If the aircraft continues to penetrate the boundary the PULL UP lights are activated and a (WHOOP, WHOOP) PULL UP aural is repeated until the warning envelope is exited. <2040>

If the aircraft penetrates the Mode 2B boundary with both gear and flaps in a landing configuration, the GND PROX lights are activated and a TERRAIN aural is repeated until the envelope is exited. <2040>

C. Mode 3 - Altitude Loss After Take-off

Mode 3 provides alerts when the aircraft loses a significant amount of altitude after take-off, or low altitude go-around with gear or flaps not in a landing configuration. The amount of altitude loss permitted before an alert is generated depends on the height of the aircraft above the terrain.

The alert activates the GND PROX lights and generates a DON'T SINK, DON'T SINK aural. The DON'T SINK, DON'T SINK aural is only repeated if the altitude loss continues. The GND PROX lights will go out once a positive rate of climb is achieved. <2040>

D. Mode 4 - Unsafe Terrain Clearance

Mode 4 provides alerts for insufficient terrain clearance with respect to phase of flight, configuration and speed. Mode 4 has three sub-modes referred to as Mode 4A, Mode 4B and Mode 4C.

Mode 4A is active during cruise and approach with the gear and flaps not in the landing configuration. The boundary for Mode 4A is 500 feet radio altitude and increases linearly with airspeed, to a maximum of 1000 feet radio altitude. If the envelope is penetrated at less than 190 knots, the GND PROX lights flash and the TOO LOW GEAR aural alert is generated. If the envelope is penetrated at more than 190 knots, the GND PROX lights flash and a TOO LOW TERRAIN aural alert is generated. <2040>

Mode 4B is active during cruise and approach, with gear down and flaps not in the landing configuration. The boundary for Mode 4B is 245 feet radio altitude and increases linearly with airspeed, to a maximum of 1000 feet radio altitude. If the envelope is penetrated at less than 159 knots, the GND PROX lights flash and the TOO LOW FLAPS aural is generated. The flight crew may override the TOO LOW FLAPS alert by selecting the GND PROX FLAP OVRD. If the envelope is penetrated at more than 159 knots, the GND PROX lights flash and the TOO LOW TERRAIN aural alert is generated. <2040>

Mode 4C is active during the take-off phase with either gear or flaps not in the landing configuration. Mode 4C alerts the pilot when the terrain is rising more steeply than the aircraft is climbing. Mode 4C is based upon a minimum terrain clearance floor, that increases with radio altitude. If the aircraft radio altitude decreases to the value of the minimum terrain clearance floor, the GND PROX lights flash and the TOO LOW TERRAIN aural is generated. <2040>

The GND PROX lights will continue to flash until the alert envelope is exited. Subsequent alerts will only occur if the envelope penetration increases by 20%. <2040>

E. Mode 5 - Below Glideslope Alert

Mode 5 provides two levels of alerting during airplane descents below the glideslope on front course ILS approaches.

The first alert level occurs when the aircraft is more than 1.3 dots below the glideslope and is called a “soft” alert. The GND PROX lights flash and the GLIDESLOPE aural is generated at approximately one half the volume of other aurals. <2040>

The second alert level occurs when the aircraft is below 300 feet radio altitude and is more than 2 dots below the glideslope and is called a “hard” alert. The GND PROX lights flash and the GLIDESLOPE aural is generated at the normal aural volume. <2040>

The GND PROX lights will go out once the glideslope deviation is less than 1.3 dots. <2040>

Mode 5 can be inhibited by pushing either PULL UP / GND PROX light while the aircraft is below 2000 feet radio altitude. Modes 1 through 4 aurals have priority over Mode 5 aurals. <2040>

F. Mode 6 - Callouts

Mode 6 provides different combinations of programmable advisory callouts covering the following:

- Transition through approach minimums
- Altitude Callouts on Approach
- Excessive Bank Angle

(1) Transition through approach

Mode 6 provides audio alerts for descent below minimums altitude, DH or MDA, and prompts a voice warning. The function is enabled between 1000 and 10 feet radio altitude for DH callouts and when corrected altitude exceeds the MDA value by 200 feet. The landing gear must be down to activate the callouts.

(2) Altitude Callouts

The altitude callout function generates aurals for descent below predetermined altitudes. Altitude callouts are generated only once and are reset by ascending to 1000 feet, or in the event that a transition from approach mode to take-off mode occurs.

(3) Excessive Bank Angle Alerting

If enabled, excessive bank angle alerting is a function of roll angle with respect to altitude above ground level. Upon penetration of the alert envelope boundaries, the BANK ANGLE, BANK ANGLE aural is generated. The aural is issued once, and then only repeated if the roll angle increases by 20%.

G. Mode 7 - Windshear Detection and Alerting

Mode 7 monitors for windshear conditions during take-off and final approach between radio altitudes of 10 to 1500 feet.

Windshear warnings are triggered for tail wind and down draft conditions. Windshear warnings generate a siren, a WINDSHEAR, WINDSHEAR, WINDSHEAR aural and a red WINDSHEAR warning on the primary flight displays (PFDs).

Windshear alerts are triggered for headwind and updraft conditions. Windshear alerts generate a amber WINDSHEAR alert on the PFDs.

Flight director command bars provide escape guidance automatically when a windshear warning occurs or when the TOGA (take-off/go-around) switch(s) on the thrust levers are pressed. Pitch limit indicators (alpha-margin indicators) will appear on both primary flight displays for a windshear warning or alert.

The autopilot is automatically disengaged two seconds after windshear warning (if autopilot not already disengaged). During those two seconds, the autopilot will follow the windshear escape guidance.

Windshear warnings take priority over all other aural alerts and warnings, except a stall warning.

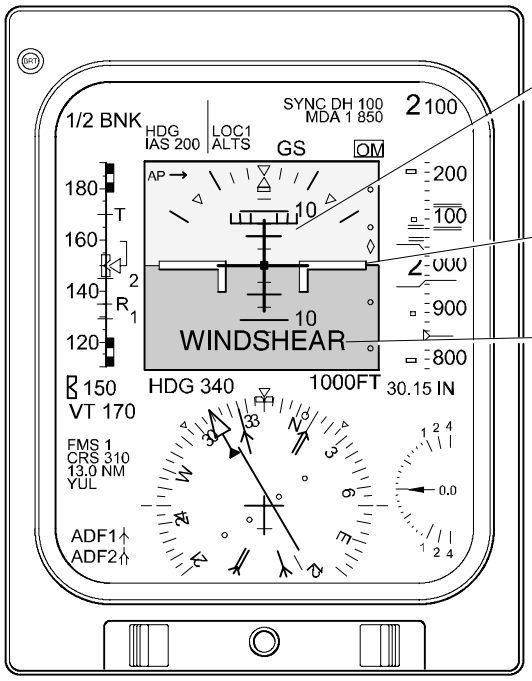

Pitch Limit Marker (amber)
(alpha-margin indicator)
Displayed during windshear warning or alert. Displays amount of pitch attitude change that can be made before the airplane reaches stall angle of attack.

Flight Director Command Bars (magenta)
Provide escape guidance during a windshear warning or when TOGA is selected on thrust levers.

Windshear Message
Flashes (amber) then comes on steady to indicate that the airplane is entering an increasing performance windshear condition.
Flashes (red) then comes on steady to indicate that a severe decreasing performance windshear condition has been encountered. Accompanied by aural warning.

(SIREN)
WINDSHEAR
WINDSHEAR
WINDSHEAR

Primary Flight Display
Pilot's and Copilot's Instrument Panels

WindshearGround Proximity Warning System –
Detection and Alerting <1015, 2040>
Figure 18–80–3

H. Terrain / Obstacle Awareness Alerting and Display <2040>

The terrain awareness alerting function uses airplane geographical position, aircraft altitude, and a terrain database to predict potential conflicts between the aircraft flight path and the terrain.

The terrain awareness alerting continuously computes terrain clearance envelopes ahead of the aircraft. Two envelopes are computed, one corresponding to a terrain caution alert level and one corresponding to a terrain warning alert level.

Terrain data is displayed on the multifunctional displays by pressing RDR / TERR on the display control panel. The terrain display can be overlaid on the multifunctional display in navaid sector and present position map formats. The terrain display is depicted as variable density dot patterns in green, yellow or red. The density and color are a function of how close the terrain is relative to airplane altitude. When the conditions for either a terrain awareness caution or warning are detected, the terrain display automatically “pops-up” on both multifunctional displays and the range defaults to 10nm.

Terrain more than 2000 feet below the airplane, or within 400 feet (vertical) of the nearest runway elevation is not displayed.

At altitudes safely above all terrain within the display range chosen, the terrain displayed regardless of the aircraft altitude. Two elevation numbers (in hundreds of feet MSL) indicating the highest and the lowest terrain currently being displayed are overlaid on the display. Terrain within 400 feet (vertical) of the nearest runway elevation is not displayed. <2040>

When the airplane penetrates the caution envelope boundary, the GND PROX lights flash and the CAUTION TERRAIN, CAUTION TERRAIN aural is generated. Terrain caution areas are shown in solid yellow on the terrain display.

When the aircraft penetrates the warning envelope boundary, the PULL UP lights flash and the TERRAIN, TERRAIN, PULL UP aural is generated. Terrain warning areas are shown in solid red on the terrain display.

An obstacle database is included within the terrain database. When an obstacle caution threat is detected the GND PROX lights flash and a CAUTION OBSTACLE, CAUTION OBSTACLE aural is generated. Obstacle cautions are shown in solid yellow on the terrain display. When an obstacle warning threat is detected the PULL UP lights flash and an OBSTACLE, OBSTACLE, PULL UP aural is generated. Obstacle warnings are shown in solid red on the terrain display.

I. Terrain Clearance Floor <2040>

Terrain clearance floor is an increasing terrain clearance envelope around the nearest runway directly related to the distance from that runway. Terrain clearance floor alerts are based upon current airplane position, nearest runway centre point position, radio altitude, and a database of hard-surfaced runways whose length is greater than 3500 feet. Terrain clearance floor compliments Mode 4 alerts by covering insufficient terrain clearance even when in a landing configuration.

Penetration of the alert envelope activates the GND PROX lights and generates a TOO LOW TERRAIN aural. The aural will occur once upon initial envelope penetration and one time thereafter for each 20% degradation in altitude. The GND PROX lights remain on until the aircraft exits the alert envelope.

Terrain Display Annunciations

- TERRAIN (cyan) - Terrain display has been selected.
- TERRAIN TEST (cyan)- GPWS is in self test.
- TERRAIN NOT AVAIL (white) - Terrain has been selected for display but the estimated navigation accuracy is insufficient.
- TERRAIN OFF (white)- Terrain has been selected for display but terrain functions have been manually inhibited.

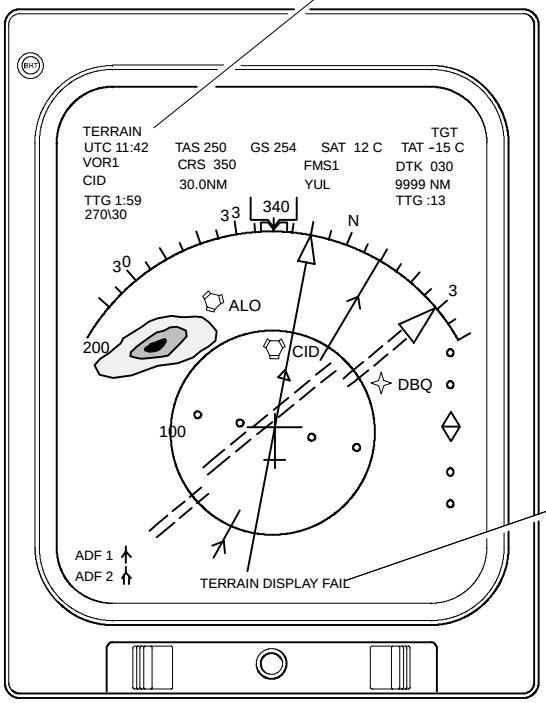

TERRAIN DISPLAY FAIL (amber)
Terrain has been selected for display and the required data is either failed, missing, or invalid.

TERRAIN RANGE XXX NM (amber)
Terrain range disagrees with display control panel range.

Multifunction Display - Navaid Sector Mode
Pilot's and Copilot's Instrument Panels

Ground Proximity Warning System Terrain Display <2040>
Figure 18–80–4

WINDSHEAR FAIL status (white)
Indicates a failure in the windshear detection system.

GPWS FAIL status (white)
Indicates a failure in the basic ground proximity warning modes.

GS CANCEL status (white)
Indicates that glideslope Mode 5 alerts have been inhibited.

TERRAIN FAIL status (white)
Indicates a failure in the terrain map display.

TERRAIN OFF status (white)
Indicates that the terrain map display has been selected and the terrain functions have been inhibited.

TERRAIN NOT AVAIL status (white)
Indicates that the terrain map display is not available due to position inaccuracy.

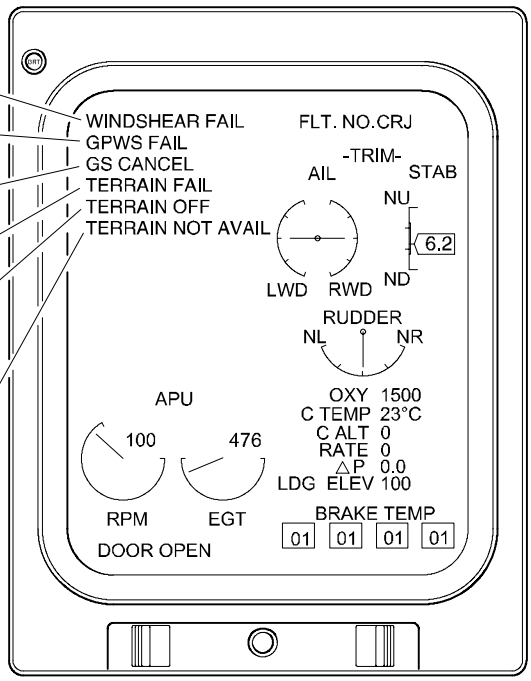

Status Page

Ground Proximity Warning System Status Page <2040>
Figure 18–80–5

J. System Circuit Breakers

SYSTEM	SUB-SYSTEM	CB NAME	BUS BAR	CB PANEL	CB LOCATION	NOTES
Ground Proximity Warning System	Computer	GND PROX WARN	AC BUS 1	1	B14	

THIS PAGE INTENTIONALLY LEFT BLANK

1. WEATHER RADAR SYSTEM

The weather radar system provides the flight crew with a color-coded display of radar detectable precipitation and ground mapping along the airplane's flight path. System range is up to 320 nautical miles and up to 60 degrees on either side of the airplane's flight path. The display control panel is used to select the weather radar format on the multifunctional displays (MFDs). Weather radar data can also be overlaid in navaid sector, present position map and TCAS modes. Control is provided using the weather radar control panel.

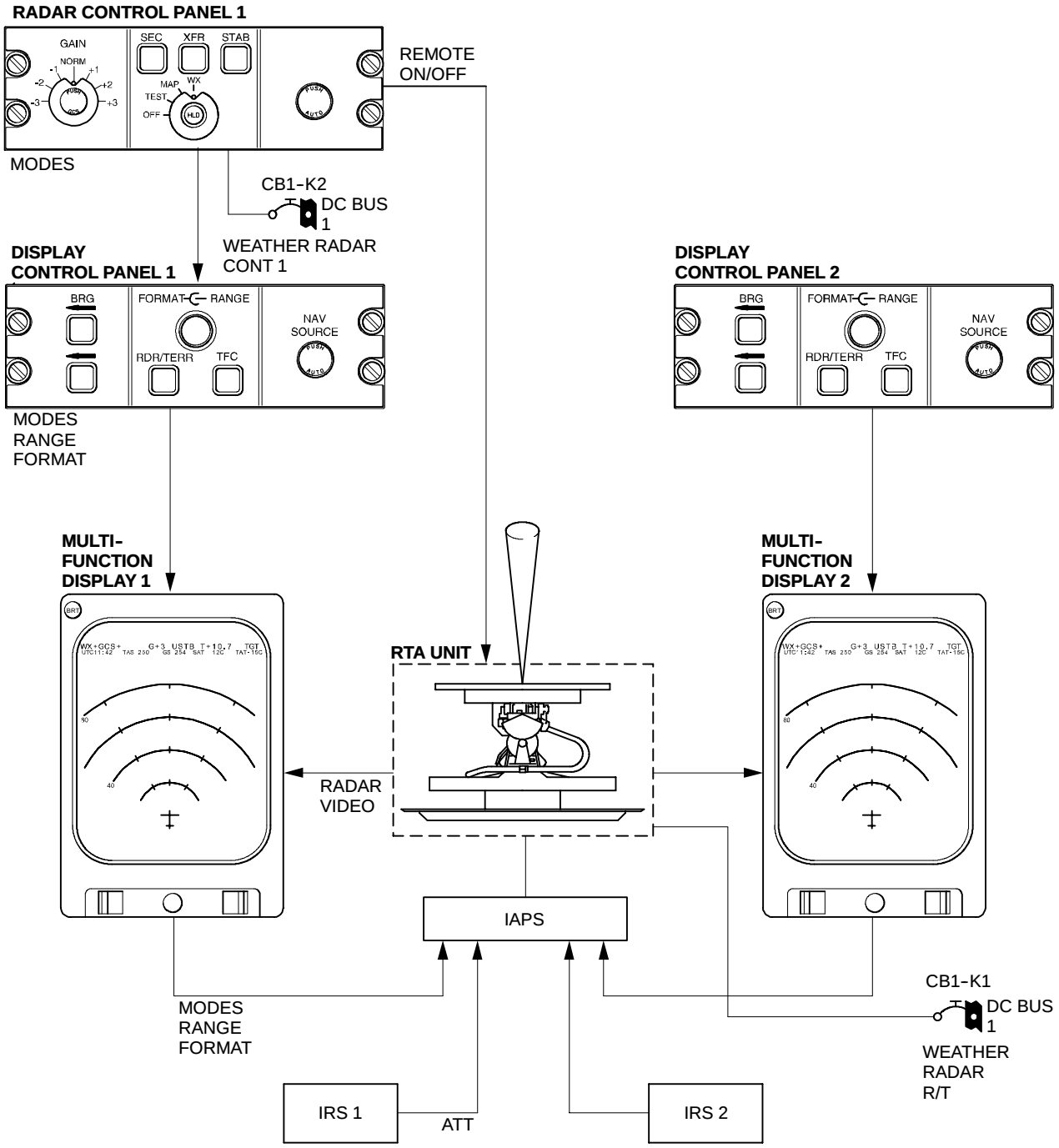

Weather Radar System <1025, 2040>
Figure 18-90-1

XFR
Used to transfer control of display range to opposite side display control panel. Controlling side range values are displayed in white and non-controlling side values are displayed in yellow.

STAB
Used to deselect radar stabilization by disconnecting attitude reference signal in the event of an attitude system failure.

SEC
Used to select 30° sector scan instead of the normal 60° sector scan. Display refresh or update rate doubles.

TILT
Used to change antenna tilt up or down angle for desired radar scanning. Tilt limits are ±15°.

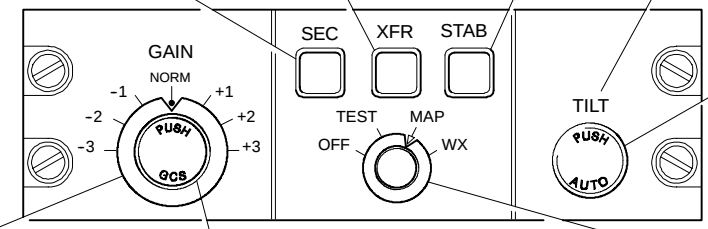

AUTO
When pushed in, tilt is automatically adjusted for changes made in altitude or range.

Weather Radar Control Panel
Center Pedestal

GAIN
Used to control receiver gain.
- NORM - Display colors accurately present detected rainfall levels.
- -1, -2, -3 Positions: Reduces sensitivity to eliminate weaker weather targets.
- +1, +2, +3 Positions: Increases sensitivity to enable crew to differentiate between rainfall levels.

GCS
When pressed in during WX mode, ground cluster suppression (GCS) reduces the intensity of ground returns and permits clearer definition of precipitation. Suppression lasts approximately 12 seconds. Any mode or range change cancels GCS.

Mode Select
Used to select radar mode of operation.
- OFF - Removes power from the transmitter and places radar in standby mode.
- TEST - Starts radar self-test. Test pattern displayed on MFD.
- MAP - Ground targets are displayed on MFD in cyan, green, yellow or magenta (depending on strength).
- WX - Detectable weather displayed in green, yellow, red or magenta (depending on estimated rainfall rate).

Weather Radar System Control Panel
Figure 18-90-2

The colors used on the radar display to represent rainfall intensity are as follows:

DISPLAY COLOR	RAINFALL RATE INCHES/HR (MM/HR)	VIDEO INTEGRATED PROCESSOR (VIP) CATEGORIZATIONS		
		STORM CATEGORY	VIP LEVEL	RAINFALL RATE INCHES/HR (MM/HR)
MAGENTA	> 2.0 (> 51)	EXTREME	6	> 5.0 (> 127)
		INTENSE	5	2.0 – 5.0 (51 – 127)
RED	0.47 – 2.0 (12 – 51)	VERY STRONG	4	1.02 – 1.97 (26 – 50)
		STRONG	3	0.48 – 1.02 (12 – 26)
YELLOW	0.16 – 0.47 (4 – 12)	MODERATE	2	0.1 – 0.48 (2.5 – 12)
GREEN	0.04 – 0.16 (1 – 4)	WEAK	1	0.01 – 0.1 (0.25 – 2.5)

Radar Mode (cyan)
- RADAR OFF – Loss of weather radar input.
- STBY – Weather radar in standby mode.
- WX – Weather radar mode.
- MAP – Ground mapping mode.
- TEST – Radar test mode.

Receiver Gain (cyan)
Indicates selected gain. Prefixed by a “”G”.

USTB (amber)
Indicates an attitude system failure. Turns cyan when radar stabilization has been deselected.

+GCS (cyan)
Indicates that ground clutter suppression has been selected.

Antenna Tilt (cyan)
Indicates antenna tilt angle. Prefixed by a ””T”. Suffixed by an “”A” if auto tilt is enabled.

Radar Status Line

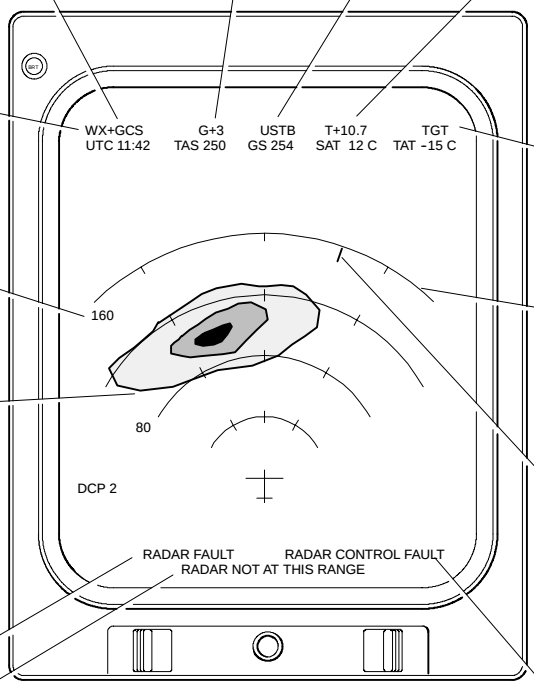

TGT
Indicates target alert.

Range (white)
Indicates range as selected on display control panel.

Range Arcs (white)
Indicates range increments. Marks placed at 30° intervals.

Radar Returns
Indicates rainfall intensity or ground targets. A yellow arc is displayed when the radar cannot accurately determine rainfall levels.

Dynamic Sweep Mark (cyan)
Represents position of weather radar antenna.

RADAR FAULT (cyan)
Internal fault detected.

Multifunction Display – Weather Radar Mode
Pilot’s and Copilot’s Instrument Panels

RADAR NOT AT THIS RANGE (cyan)
Radar control has been transferred and range disagrees with display control panel range.

RADAR CONTROL FAULT (amber)
Radar range disagrees with display control panel range.

Weather Radar System – MFD Indications
Figure 18–90–3

A. System Circuit Breakers

SYSTEM	SUB-SYSTEM	CB NAME	BUS BAR	CB PANEL	CB LOCATION	NOTES
Weather Radar	Receiver / Transmitter	WEATHER RADAR R/T	DC BUS 1	1	K1	
	Control	WEATHER RADAR CONT 1			K2	