Brake Energy Considerations in Flight Operations

Rob Root
Flight Operations Engineering
Boeing Commercial Airplanes
September 2003

Introduction

- Brake energy limitations may not be common for most operators, and so are not well understood
- Certification of brakes has changed significantly in recent years
- Misconceptions about brake energy abound
- Incidents associated with high brake energy continue to occur…

A more detailed look at the subject is warranted

Brake Anatomy

- Brake assembly composed of rotors, stators, hydraulic pistons and a pressure plate
- Rotors, stators alternate to form "heat stack"

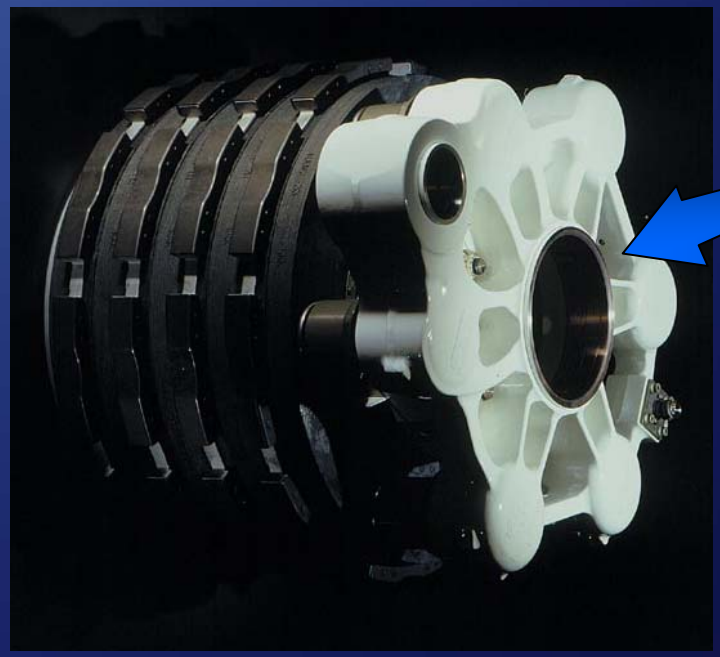

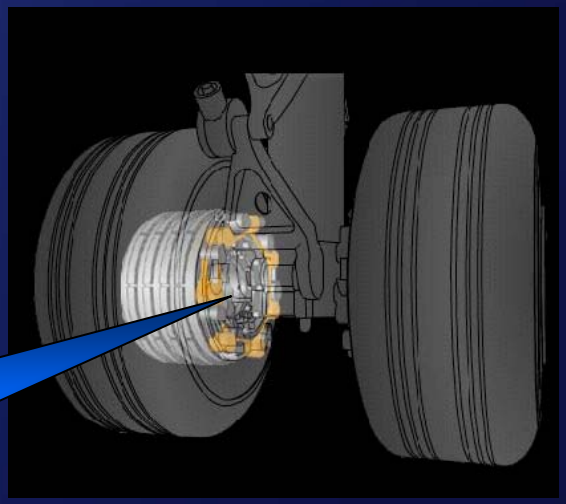

Brake Application

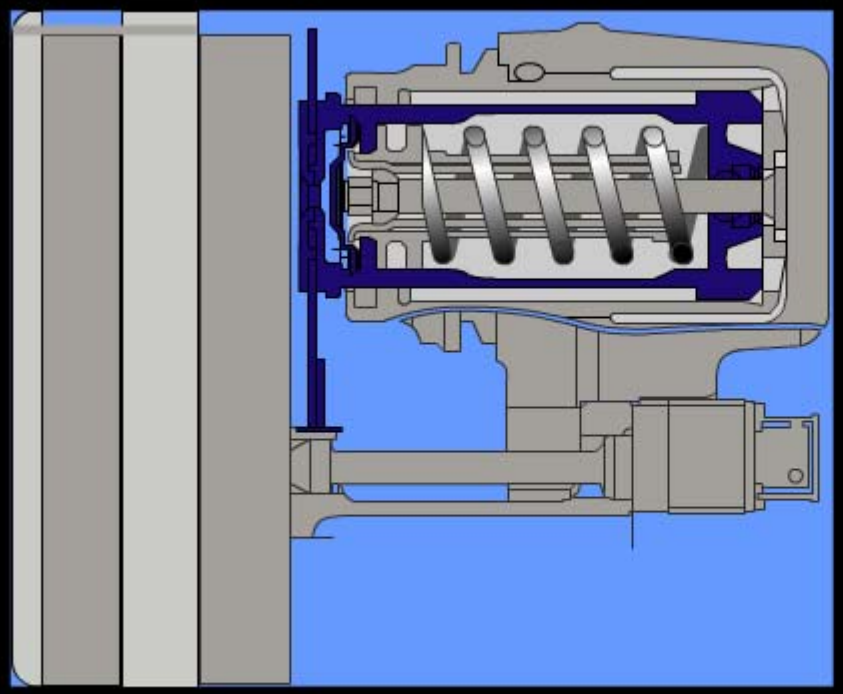

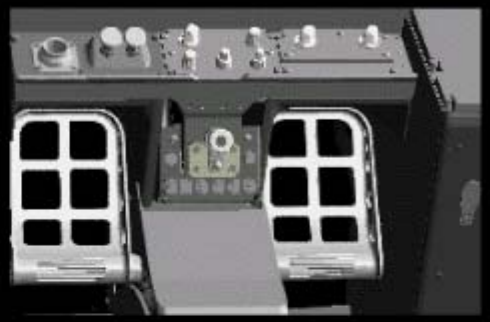

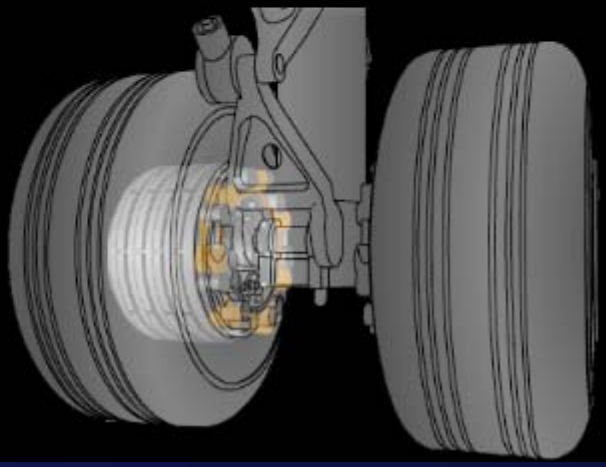

Brakes As Energy Converters

- Kinetic Energy → Heat Energy

$$\frac{1}{2} m_{aircraft} V_G^{\,2} \Rightarrow cm_{heatsink}\Delta T$$

Aerodynamic Drag

Reverse Thrust

Where m = mass,

V_G = groundspeed

c = specific heat of heat sink material

T = temperature

Sources of Brake Energy…

- Normal landings
- Taxi (especially downhill)
- Multiple taxi stops
- Rejected Takeoffs
- Non-normal landings (e.g. flaps up landing)
- Poor taxi technique
- “Dragging” brake(s)

Adverse Consequences…

Potential Problems Related to Excessive Brake Energy

- Fire
- Fade
- Seizure/Welding
- Failure of brakes or associated components
- Fuse Plug Melt

Adverse Consequences…

Fire

In a very extreme case, excessive brake temperatures could result in uncontained fire:

- A severe fire could jeopardize the safe evacuation of the airplane following a landing or rejected takeoff…
- Uncontained brake fire could also result in severe airplane damage or even hull loss…

Adverse Consequences…

Fade

- Once a certain total absorbed brake energy is exceeded, the brakes' ability to generate stopping force may diminish:

The brakes' fade characteristics <u>are</u> reflected in the certified performance

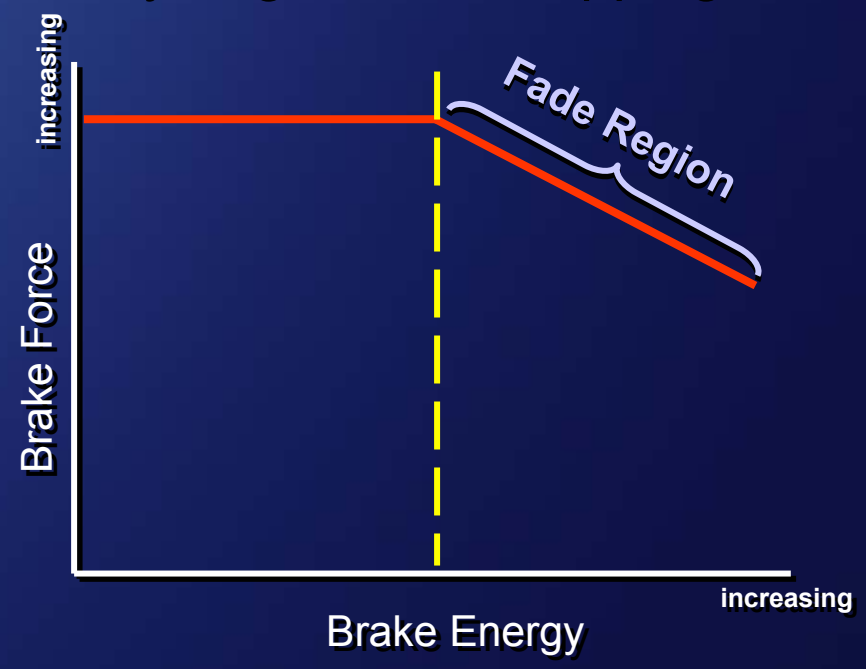

Failure to properly account operationally for brake residual energy may result in <u>unanticipated</u> fade, and inability to stop

Adverse Consequences…

Seizure/Welding

If a parking brake is applied too soon after a high energy stop, there is a chance that rotors and stators of steel brakes can fuse, or “weld” together. This can result in:

- Inability to move the airplane
- Unscheduled maintenance
- Schedule disruption
- Disruption of airport operations…

Carbon brakes are not susceptible to “welding”

Adverse Consequences…

Failure of Brakes and Associated Components

- Excessive brake heat can cause gross acceleration in brake wear, which may result in complete brake failure
- A wheel that is subjected to extreme temperatures, especially repeatedly, may become tempered, and lose structural strength. Wheel fracture or separation is potentially very dangerous
- Nylon tire cords subjected to extreme temperatures may weaken, and cause tire failure

Adverse Consequences…

Fuse Plug Melt

- Wheel fuse plugs are designed to melt under certain conditions, deflating the tire to prevent hazardous wheel failure or tire burst
- Stopping force is reduced after the tire deflates…
- Ability to taxi may be compromised…
- At a minimum, unscheduled maintenance and schedule disruption will result

Adverse Consequences…

Potential Problems Related to Excessive Brake Energy Can Be Avoided!

- Fire
- Fade
- Seizure/Welding
- Failure of brakes or associated components
- Fuse Plug Melt

Armed with adequate knowledge of brake energy, operational safeguards will prevent these problems…

Certification Requirements

Brake Energy

As part of the certification process, brakes are subjected to a multitude of dynamometer and flight tests that establish, among other things their ability to safely absorb and dissipate high energy levels

The most important of these energy levels are:

- Maximum kinetic energy accel-stop
- Most severe landing stop
- Fuse-plug-no-melt stop

Certification Requirements

Maximum Kinetic Energy Accelerate-Stop

Energy associated with a Rejected Takeoff (RTO):

- Most critical combination of altitude, temperature, takeoff weight, speed
- Dynamometer test substantiates wheel, brake and tire can safely absorb this energy
- For newer airplanes, dynamometer test is conducted with 100% worn brakes

Certification Requirements

Maximum K.E. Accel-Stop: Flight Test

Regulations also require an RTO demonstration to validate the dynamometer test results:

- Recent revision to regulations requires that this flight test is conducted with 90% worn brakes
- For 5 minutes after completion of the stop, no condition can jeopardize safe and complete evacuation

Certification Requirements

Maximum K.E. Accel-Stop: Flight Test

Dispatch Requirement:

Maximum Kinetic Energy Accelerate-Stop

- Once the Maximum Kinetic Energy Accel-Stop is established, this defines the brake energy limitation that must be evaluated for every takeoff
- May restrict maximum V_1 selection (V_{MBE})
- In more severe cases, may limit allowable takeoff weight

Brake energy is typically limiting in high/moderately hot conditions, on long runways, with less deflected takeoff flap settings…

Takeoff Checklist:

1. Field ☑
2. Climb ☑
3. Obstacle ☑
4. Tire Speed ☑
5. Brake Energy ☑

Certification Requirements

Most Severe Landing Stop

Energy associated with a non-normal landing:

- Critical non-normal landing configuration
- Most critical combination of altitude, temperature, landing weight, speed
- Dynamometer test substantiates wheel, brake and tire can safely absorb this energy
- Flight test not required
- Need not be considered if Maximum K.E. Accel-stop is more severe. *This is typically the case for most transport category aircraft…*

Certification Requirements

Fuse-Plug-No-Melt Stop

Dynamometer and/or flight test establishes maximum brake energy level at which wheel fuse plugs do not melt:

- This energy level defines the Maximum Quick Turnaround Weight (MQTW) limit published in the Airplane Flight Manual
- Also defines threshold to trigger "BRAKE TEMP" light for Boeing models and "BRAKE OVHT" light for heritage Douglas models

Certification Requirements

Overtemperature Burst Protection

- FAR/JAR Part 25 requires overtemperature burst protection for wheels and tires
- Fuse plugs are installed typically in inner wheel halves
- They melt at a precise temperature and deflate tire

Fuse Plugs

And Maximum Kinetic Energy Accel-Stop

Fuse plugs must demonstrate their intended function:

- They must melt and safely release tire pressure at an energy in excess of Fuse-plug-no-melt energy
- Typically demonstrated in conjunction with Maximum Kinetic Energy Accel-Stop flight test RTO

Fuse Plugs

And Maximum Kinetic Energy Accel-Stop

Fuse Plugs

and Maximum Quick Turnaround Weight limit

- Fuse plugs cannot melt at Fuse-Plug-No-Melt energy; this energy defines Maximum Quick Turnaround Weight limit
- If a landing is made at a weight exceeding MQTW, mandatory waiting period prior to next takeoff is imposed
- Permits wheel fuse plugs to reach their peak temperature and start to cool
- If fuse plugs are going to melt, they will do so within this period…

Steel Versus Carbon Brakes

Two primary brake types in use on commercial transport aircraft today:

- Steel: Rotors and Stators are constructed of steel alloy with metallic lining pads
- Carbon: Rotors and Stators are constructed of Carbon/Carbon Composite material

Steel Brakes

- Steel brakes are relatively inexpensive
- Much larger mass of steel is required than carbon to absorb the same energy
- Steel brake wear is dependent primarily on energy added
- Less severe application → longer life
- Steel brake wear increases significantly as brake temps become elevated

Carbon Brakes

- Much lighter than steel brakes
- Carbon brakes can withstand much higher operating temperatures
- Initial cost and overhaul cost is much higher than steel
- Carbon brake wear is dependent primarily on number of applications
- Fewer applications → longer life
- Excellent wear characteristics at high temps

Steel Versus Carbon Brakes

Performance Differences

There are some minor performance differences between steel and carbon brakes:

- Carbon brakes much less susceptible to fade
- Carbon brakes immune to “welding”
- Carbon brakes more forgiving in terms of residual energy
- Either brake type designed to meet design stopping and energy absorption requirements

Primary benefit of carbon brakes is weight savings. For operations where weight is critical, higher cost is offset by weight advantage…

Temperature and Residual Heat

Kinetic Energy → Heat Energy

- Heat migrates to various brake and wheel components by conduction at different rates
- Temperature of wheels and fuse plugs continues to rise after stop is complete
- Heat leaves the brake, wheel, and tire by convection into the surrounding atmosphere

Temperature and Residual Heat

777 Brake Temperature Versus Time

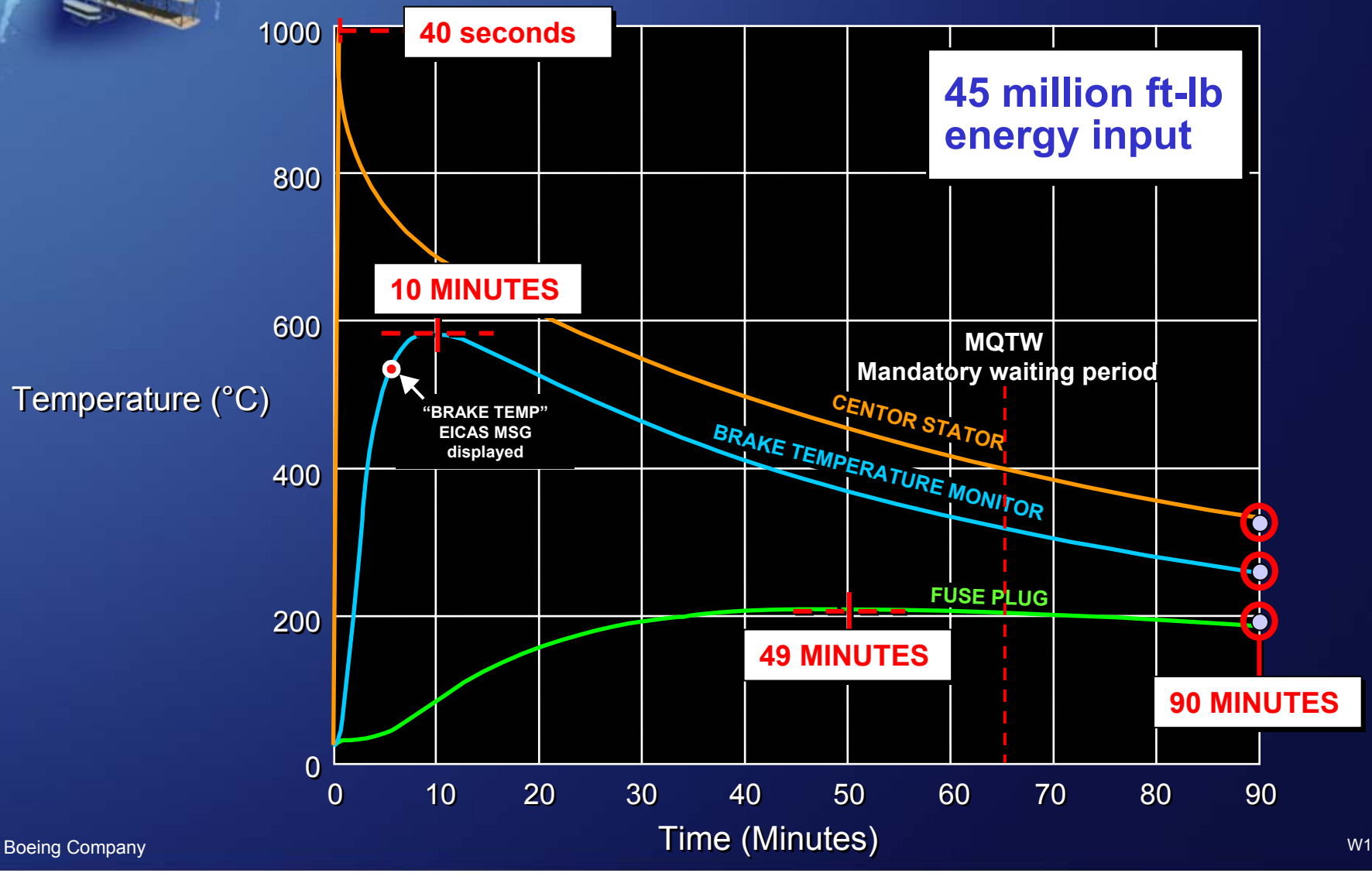

Temperature and Residual Heat

Problematic Operational Scenarios

Certain operations appear to be especially prone to brake problems due to residual energy:

- Short haul operations with short turn times
- Repetitive training flights with short cycles

Remember, brake energy can become a problem from a series of closely-spaced routine stops just as much as a single high energy stop, due to the inherently slow nature of brake cooling…

Brake Temperature Monitoring

Onboard Systems

- Many jet transports offer a Brake Temperature Monitoring System (BTMS) that vastly simplifies the identification of hot brakes and avoidance of problems associated with them…
- Temperature probes in each braked wheel transmit current temp indications for flight deck display
- Most systems also include EICAS message, BRAKE TEMP, or BRAKE OVERHEAT indicators to alert the crew when a brake temp exceeds a normal threshold

BTMS Indications

Sample 777 Gear Synoptic Display

Individual BTMS indications displayed next to each wheel

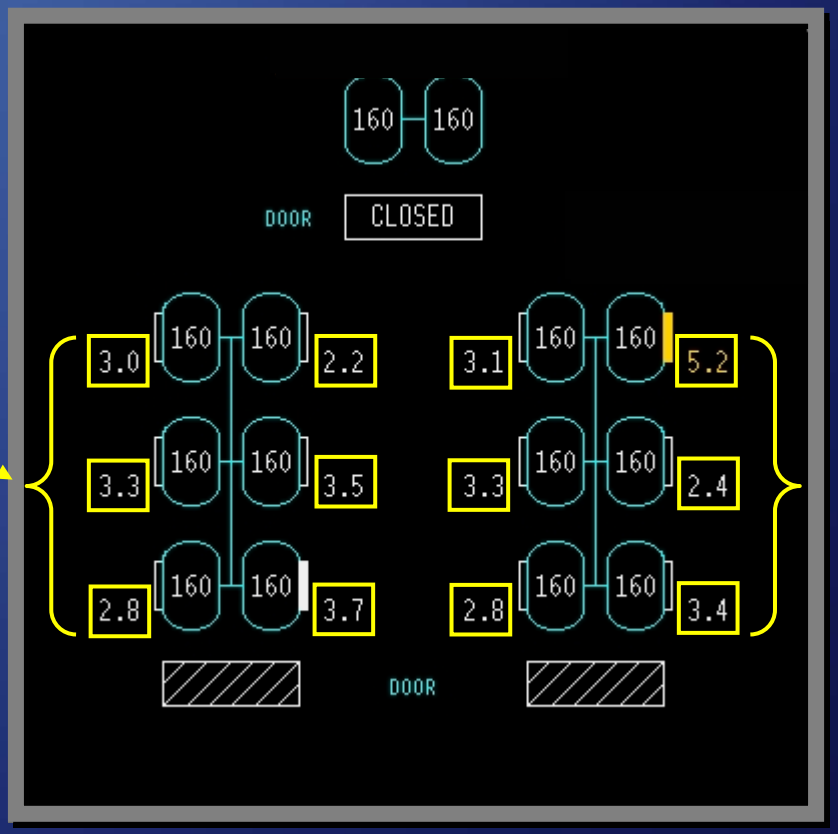

Temp indications are non-dimensionalized for Seattle Models:

- 0.0 = cold
- 9.9 = maximum

BTMS Indications

Sample 777 Gear Synoptic Display

Solid white box indicates hottest brake on each main gear within normal range (3.0 – 4.9)

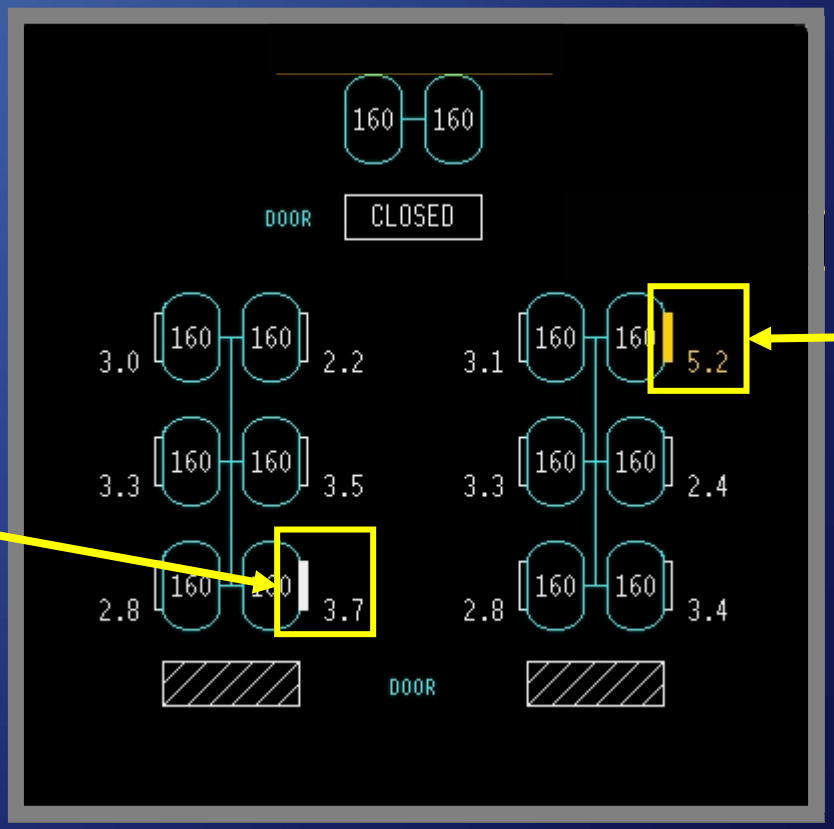

Amber text and fill indicates brake overheat (5.0 – 9.9)

BTMS indication 5.0 or greater will also trigger display of advisory BRAKE TEMP EICAS Message

Brake Temp Monitoring

Other Methods

- Certain portable thermometers have also recently received FAA and JAA approval for use in measuring brake temperatures on the ground

Brake Cooling Methods

Primary method is convection of heat into the surrounding atmosphere. Four basic variations:

- Ground cooling
- Inflight gear extended
- Inflight gear retracted
- Augmented ground cooling

Brake Cooling Methods

Avoid Unnecessary Addition of Energy!

Flight crew can influence the amount of energy that goes into the brakes, minimizing the need for brake cooling whenever possible:

- Use reverse thrust
- For landing, use minimum autobrake level consistent with operational requirements
- On long runways, consider longer rollout
- Follow recommended taxi techniques in Flight Crew Training Manual

Brake Cooling Methods

Ground Cooling

Using this method, further operations are simply delayed until brakes have cooled sufficiently:

- Very slow!
- Rate is affected by movement of air in and around brakes
- Cooling may be uneven between brakes

Brake Cooling Methods

Inflight Gear Extended Cooling

By far the most efficient cooling method!

- Often used by operators on short sectors with quick turn times
- Delayed retraction after takeoff - If performance limited, gear may need to be retracted normally for terrain clearance, and then re-extended when safe altitude is reached
- Early extension when configuring for approach-go-around performance should also be considered

Inflight gear extended cooling is about ten times more effective than still air ground cooling!

Brake Cooling Methods

Inflight Gear Retracted Cooling

- Generally the least efficient cooling method!
- In the best case, approximately equivalent to on ground cooling in still air
- For some models, only about 1/3 as effective as ground cooling
- Risks associated with retracting abnormally hot brakes into the wheel well

Brake Cooling Methods

Augmented Ground Cooling

Flow of cooling air in and around the brakes is augmented by either onboard or portable fans

- Placement of portable cooling fans in close proximity to brakes while parked

Most effective cooling is still achieved with Inflight gear extended cooling

Brake Energy

Operational Impacts

Regulatory limits (mandatory):

- VMBE and Max Brake Energy for takeoff
- Maximum Quick Turnaround

Guidance information (advisory):

- Recommended Brake Cooling Schedule

Regulatory Limit

VMBE and Max Brake Energy for Takeoff

Intent: To ensure that no takeoff is scheduled such that RTO would exceed the certified energy absorption capability of the brakes

Assumptions:

- Maximum braking
- No credit for reverse thrust
- Accountability for worn brakes…
- Residual brake energy equivalent to three miles taxi, three taxi stops prior to RTO initiation

Regulatory Limit

VMBE and Max Brake Energy for Takeoff

Application:

- Do not schedule takeoff with V1 that exceeds VMBE
- May restrict takeoff weight
- Unbalanced (lower) V1 may avoid or minimize weight offload

Note:

- Brakes are assumed to be essentially cool prior to RTO initiation…

Regulatory Limit

Max Quick Turnaround Gross Weight

Intent: To ensure that immediate departure is NOT scheduled if there is a significant possibility that fuse plugs will melt as a result of energy already added by the landing…

Assumptions:

- Brakes are applied at VREF
- Maximum braking, anti-skid operating
- No credit for reverse thrust
- No accountability for worn brakes
- NOT INTENDED to protect for RTO!

Regulatory Limit

Max Quick Turnaround Gross Weight

Application:

- For dispatch after landing at a weight that exceeds MQTW, delay departure for specified waiting period, visually inspect wheels, brakes, and tires before departure

Note:

- MQTW does not provide adjustment for residual brake energy present before landing
- MQTW does not guarantee energy capacity for RTO
- Some airplanes allow dispatch based on BTMS indication or measured temp before waiting period is complete

Advisory Guidance

Recommended Brake Cooling Schedule

Intent: To help protect against brake, tire, and wheel problems associated with high brake energy

Assumptions:

- Either RTO or landing may be evaluated
- Brakes-on-speed is selected
- Multiple braking levels are shown
- Reverse thrust credit is optional

Advisory Guidance

Recommended Brake Cooling Schedule

Application (Seattle Models):

- Graphical form in FPPM for engineers; tabular form for flight crews in QRH
- Energy level determines which of four "zones" applies to airplane
- Zone can be determined from either analytical evaluation of condition, or directly from displayed BTMS reading

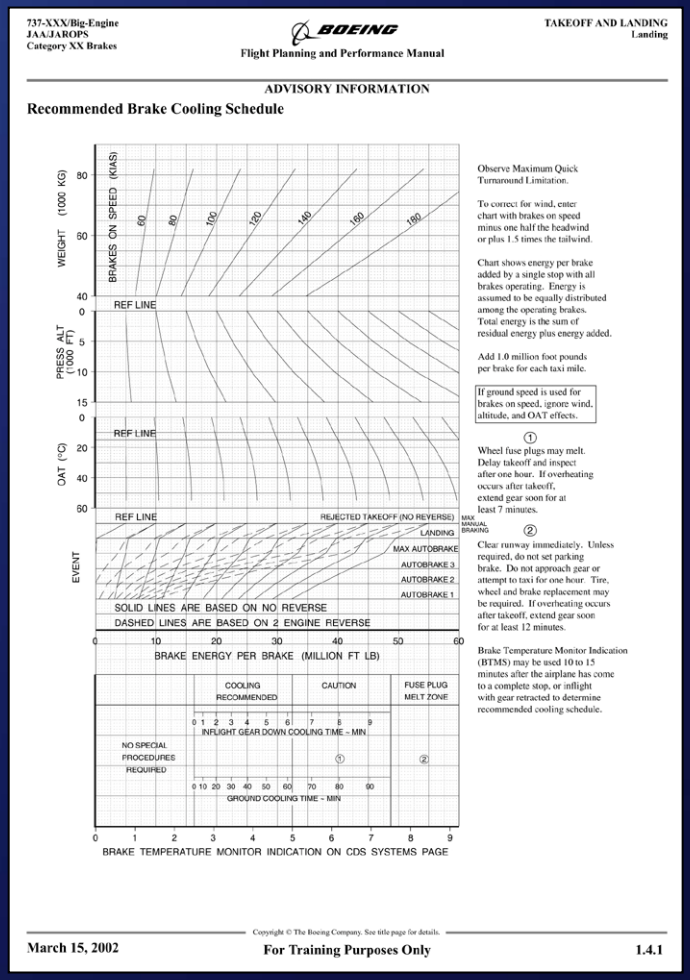

737-XXX/Big-Engine
JAA/JAROPS
Category XX Brakes

BOEING
Flight Planning and Performance Manual

TAKEOFF AND LANDING
Landing

ADVISORY INFORMATION

Recommended Brake Cooling Schedule

Observe Maximum Quick Turnaround Limitation.

To correct for wind, enter chart with brakes on speed minus one half the headwind or plus 1.5 times the tailwind.

Chart shows energy per brake added by a single stop with all brakes operating. Energy is assumed to be equally distributed among the operating brakes. Total energy is the sum of residual energy plus energy added.

Add 1.0 million foot pounds per brake for each taxi mile.

If ground speed is used for brakes on speed, ignore wind, altitude, and OAT effects.

① Wheel fuse plugs may melt. Delay takeoff and inspect after one hour. If overheating occurs after takeoff, extend gear soon for at least 7 minutes.

② Clear runway immediately. Unless required, do not set parking brake. Do not approach gear or attempt to taxi for one hour. Tire, wheel and brake replacement may be required. If overheating occurs after takeoff, extend gear soon for at least 12 minutes.

Brake Temperature Monitor Indication (BTMS) may be used 10 to 15 minutes after the airplane has come to a complete stop, or inflight with gear retracted to determine recommended cooling schedule.

March 15, 2002 For Training Purposes Only 1.4.1

Recommended Brake Cooling

Application (Seattle Models)

Analytical evaluation:

Enter with:

- Weight
- Brakes-on speed
- Pressure altitude
- OAT
- Event (RTO/Landing)
- Reverse thrust and braking level…

to determine brake energy per brake and applicable zone

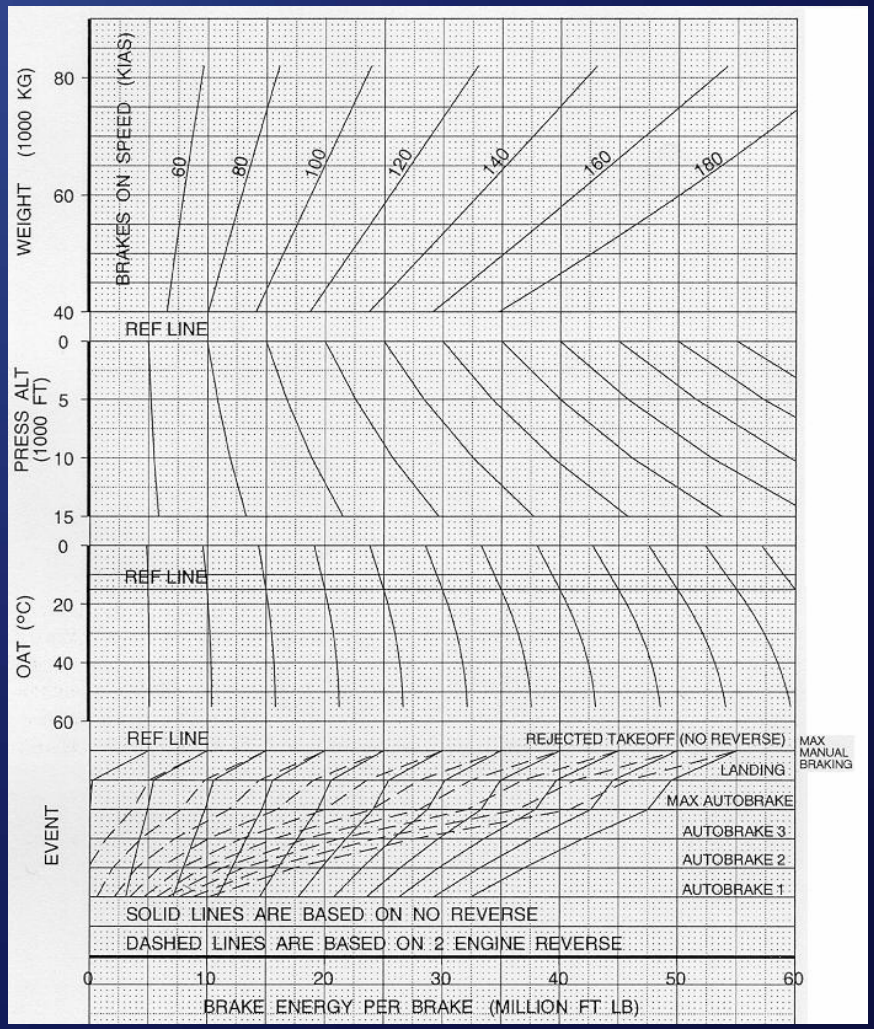

Recommended Brake Cooling

Application (Seattle Models)

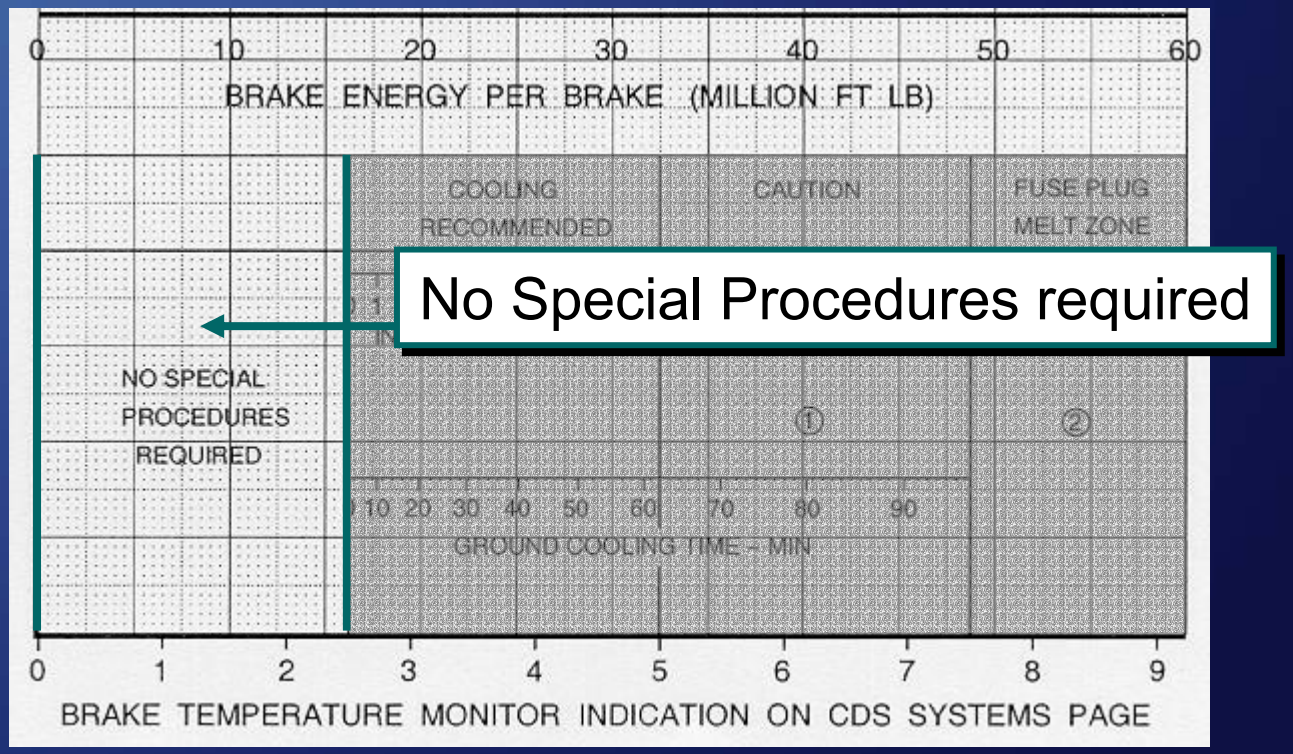

No Special Procedures required

Recommended Brake Cooling

Application (Seattle Models)

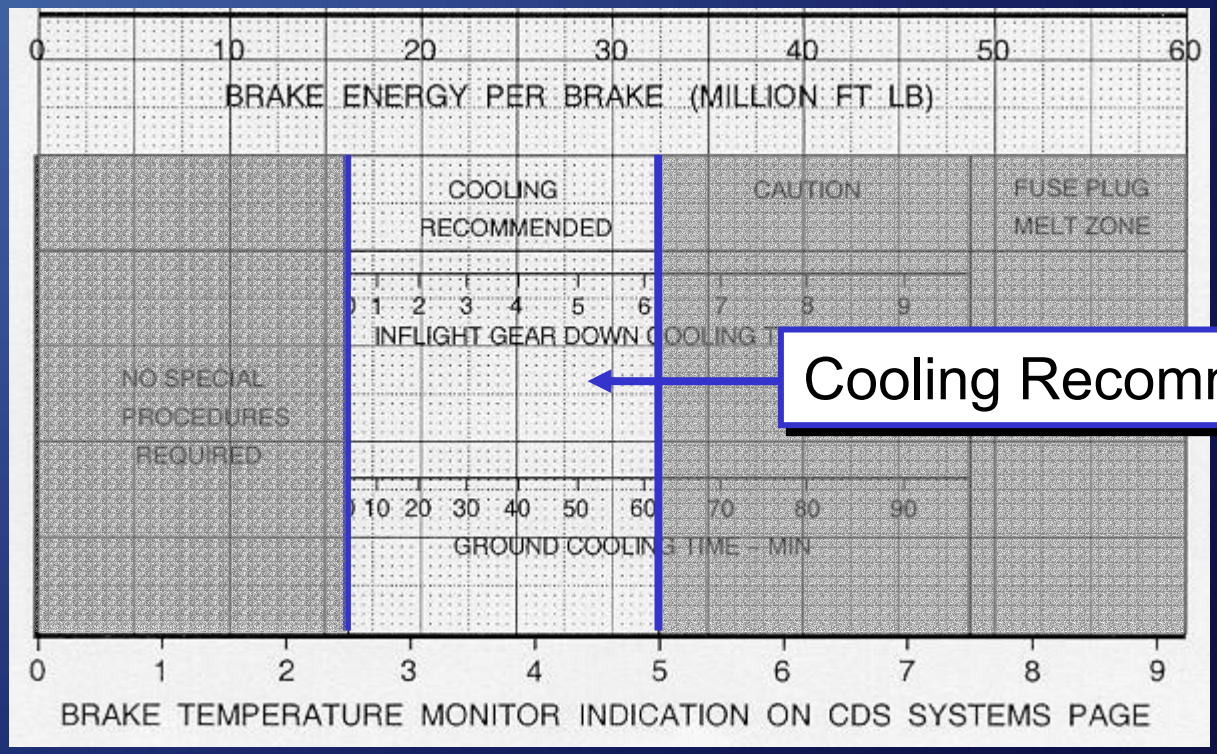

Cooling Recommended

Recommended Brake Cooling

Application (Seattle Models)

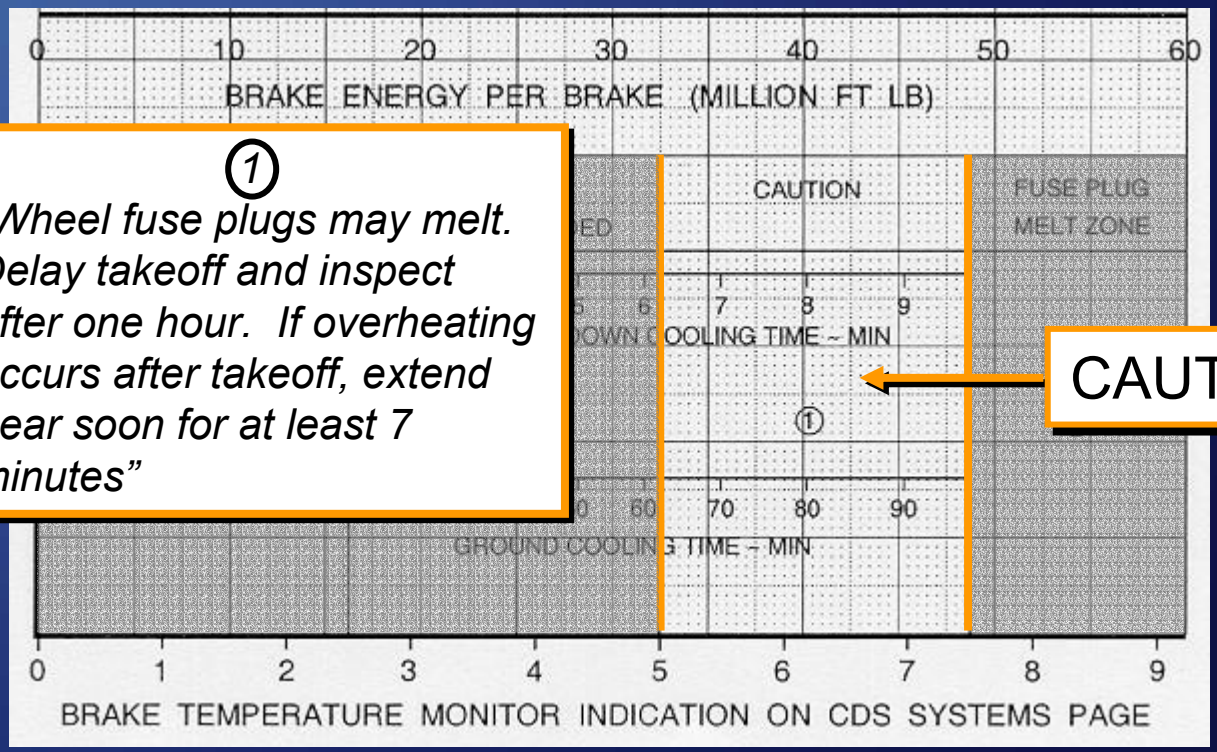

1

"Wheel fuse plugs may melt. Delay takeoff and inspect after one hour. If overheating occurs after takeoff, extend gear soon for at least 7 minutes"

CAUTION

Recommended Brake Cooling

Application (Seattle Models)

Fuse Plug Melt

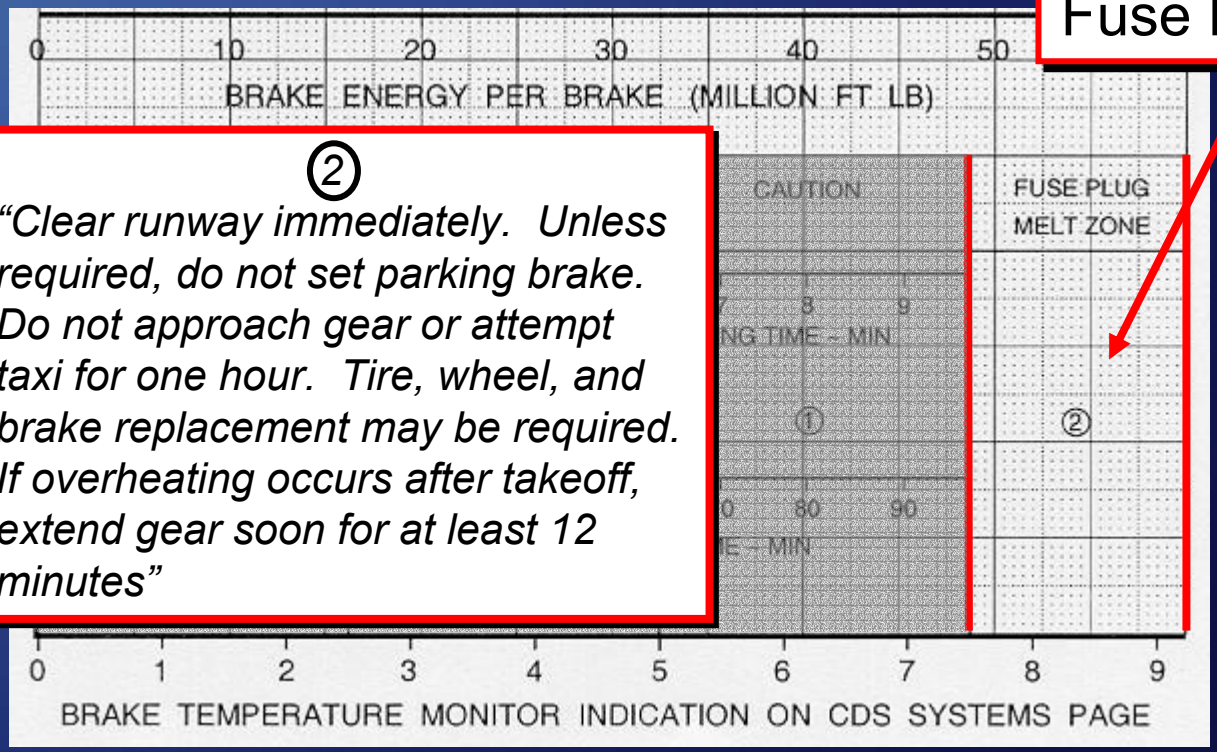

②

"Clear runway immediately. Unless required, do not set parking brake. Do not approach gear or attempt taxi for one hour. Tire, wheel, and brake replacement may be required. If overheating occurs after takeoff, extend gear soon for at least 12 minutes"

Advisory Guidance

Recommended Brake Cooling Schedule

Note: (Seattle Models):

- If the Recommended Brake Cooling Schedule is entered with BTMS, crew must wait 10-15 minutes to allow BTMS reading to peak!
- Each additional mile of taxi adds 1 million ft-lb of additional energy per brake.
- Although the Recommended Brake Cooling Schedule is primarily intended to evaluate a single event, it can be used to estimate the impact of multiple events…

Advisory Guidance

Recommended Brake Cooling Schedule (Heritage Douglas Models)

There are two separate Recommended Brake Cooling Schedules for most heritage Douglas Models:

- Recommended Brake Cooling Schedule (Landing)
- The Recommended Brake Cooling Schedule (Takeoff)
- Both are advisory

Advisory Guidance

Recommended Brake Cooling Schedule (Landing) (Heritage Douglas Models)

Intent: Allows prediction of peak BTMS temperature from expected landing conditions, for comparison to the BTMS threshold at which fuse plugs will melt

Assumptions:

- Used only for landing
- Brakes-on-speed is selected
- "Average" and "Maximum" Landings are shown
  - Average includes idle reverse, typical decel rate
  - Maximum includes max braking, no reverse
- Based on fully worn brakes

Recommended Brake Cooling

Recommended Brake Cooling Schedule (Landing) (Heritage Douglas Models) Application

Application:

Enter with:

- Brakes-on speed
- Headwind or tailwind
- Landing weight
- Adjust for OAT and pressure altitude
- Select “average” or “maximum

to determine predicted peak BTMS temperature

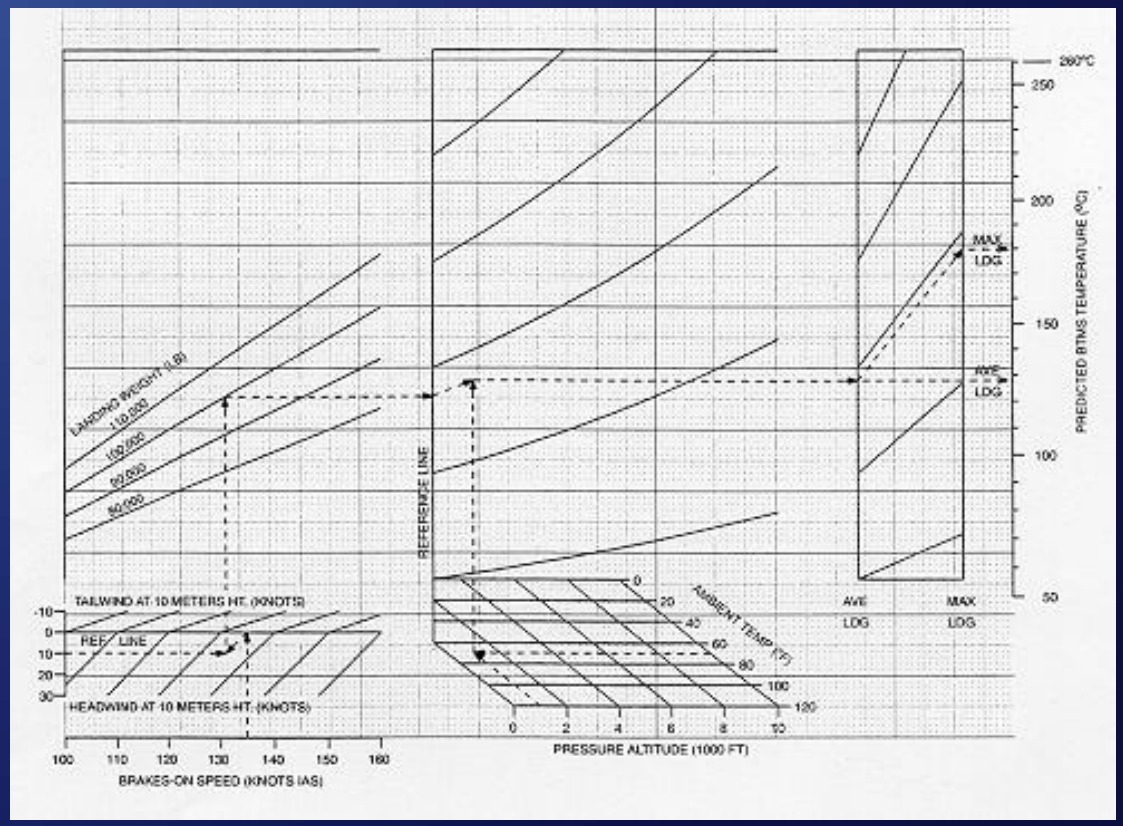

Advisory Guidance

Recommended Brake Cooling Schedule (Takeoff) (Heritage Douglas Models)

Intent: Determines cooling time required to satisfy brake energy requirements for RTO as a function of current BTMS temp and specific RTO conditions

Assumptions:

- Used only for takeoff
- V_1 and takeoff weight are selected
- Allowable temp is compared to current temp to determine cooling requirements
- RTO based on engine failure and max reverse
- Based on fully worn brakes

Recommended Brake Cooling

Recommended Brake Cooling Schedule (Takeoff) (Heritage Douglas Models) Application

Application:

Enter with:

- V_1
- Headwind or tailwind
- Takeoff weight
- Adjust for OAT and pressure altitude

to determine Allowable BTMS temp for takeoff

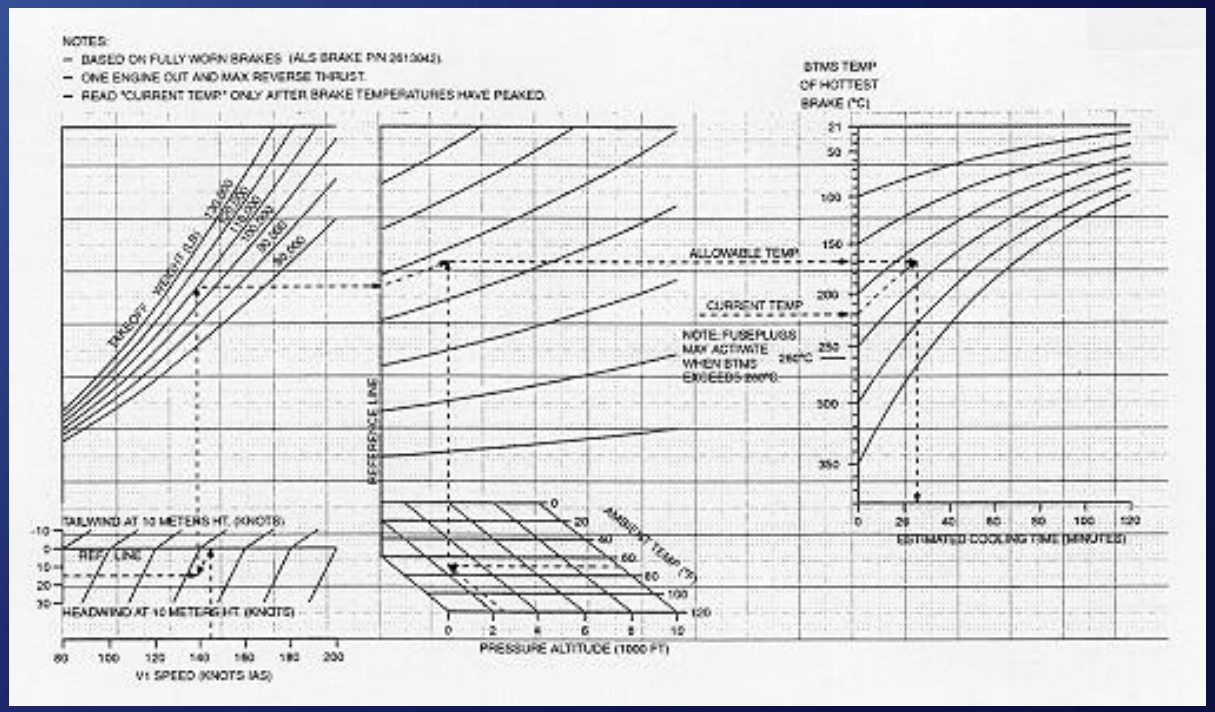

Compare to current BTMS temp to determine estimated cooling time

Advisory Guidance

Recommended Brake Cooling Schedule (Takeoff) (Heritage Douglas Models)

Note: Read "Current temp" only after BTMS reading has peaked, ten to fifteen minutes after landing

Worn Brakes

DC-10 Accident, Dallas, May 1988

Aborted takeoff from near V1 due to FLAP/SLAT DISAGREE warning

- Normal deceleration down to 130 knots, then rapid decay in decel rate
- Aircraft departed the runway at 97 knots, came to rest 1000 ft beyond runway end
- Two serious injuries, several minor injuries
- Aircraft declared a hull loss

Worn Brakes

DC-10 Accident, Post-crash Investigation

- Flaps/slats were in normal symmetrical configuration, erroneous warning due to out-of-tolerance position sensor
- Of 10 brakes, 2 were essentially new, and functioned normally
- Remaining 8 brakes were at or near wear limit, and failed during RTO

Accident investigation revealed that the maximum level of energy that brakes can safely absorb is reduced as brakes wear…

- *This reduction in capacity contributed to the brake failures during the stop*

Worn Brakes

And Brake Performance

Kinetic Energy → Heat Energy

$$\frac{1}{2} m_{aircraft} V^2 \Rightarrow c m_{heatsink} \Delta T$$

"Heat sink" mass (i.e. mass of rotors and stators) may decrease by up to 30% at fully worn limit

Prior to 1988, no requirement in airworthiness standards to demonstrate stopping capability or energy absorption with worn brakes…

Worn Brakes

And Regulatory Activity – In-service airplanes

- FAA Airworthiness Directives imposed revised wear pin limits for all in-service jet transports with MTOW > 34,000 kg, to address brake energy issue

Worn Brakes

And New Airplane Certification

All airplanes certified after adoption of Amendment 25-92 (20 March 1998) include full worn brake accountability at the time of certification. The following Boeing airplanes meet this revised standard:

737-600/-700/-800/-900

757-300

767-400

777 (all)

MD-90

717

MD-11

Summary

Brake Energy Considerations in Flight Operations

All regulatory limitations must be satisfied for legal dispatch:

- Some regulatory limits may be very conservative for normal operations
- These same limits may not provide adequate protection against problems associated with high brake energy in other situations

Summary

Brake Energy Considerations in Flight Operations

Various operational situations where brake energy and associated problems may become a concern

Avoidance of problems comes from:

- Thorough understanding of brake energy issues
- Proper pre-flight planning
- Appropriate flight crew actions
- Accountability for worn brakes

Summary

Brake Energy Considerations in Flight Operations

The good news:

- Modern brake technology, improved testing, and more stringent certification requirements provide additional safety margins
- Conscientious use of BTMS facilitates early recognition of potential brake energy issues
- Appropriate use of advisory data permits more informed decision-making

BOEING

Forever New Frontiers