34.00 CONTENTS

DESCRIPTION

The Air Data and Inertial Reference System (ADIRS) supplies temperature, anemometric, barometric and inertial parameters to the EFIS system (PFD and ND) and to other user systems (FMGC , FADEC, ELAC, SEC, FAC, FWC, SFCC, ATC, GPWS, CFDIU, CPC).
The system includes :

- three identical ADIRU's (Air Data and Inertial Reference Units).
  Each ADIRU is divided in two parts, either of which can work separately in case of failure in the other :
  - the ADR part (Air Data Reference) part which supplies barometric altitude, airspeed, mach, angle of attack, temperature and overspeed warnings.
  - the IR part (Inertial Reference) which supplies attitude, flight path vector, track, heading, accelerations, angular rates, ground speed and aircraft position.

  Note : The ADIRU gives true heading instead of magnetic heading :
  – above 82° North
  – above 73° North between 90° and 120° West (magnetic polar region)
  – above 60° South

- one ADIRS control panel (ADIRS CDU) on the overhead panel for selection of modes (NAV, ATT, OFF) and indications of failures.
  The IR is normally initialized through the FMGS, but the ADIRS CDU may be used as a back up.
- two GPS receivers, which are connected to the IR part of the ADIRU's for GP/IR hybrid position calculation.
- four types of sensors :
  - pitot probes (3)
  - static pressure probes (STAT) (6)
  - angle of attack sensors (AOA) (3)
  - total air temperature probes (TAT) (2)

  These sensors are electrically heated to prevent from icing up.
- eight ADMs (Air Data Modules) which convert pneumatic data from PITOT and STAT probes into numerical data for the ADIRUs.
- a switching facility for selecting ADR3 or IR3 for instrument displays in case of ADIRU 1 or 2 failure.

PROBES LOCATION

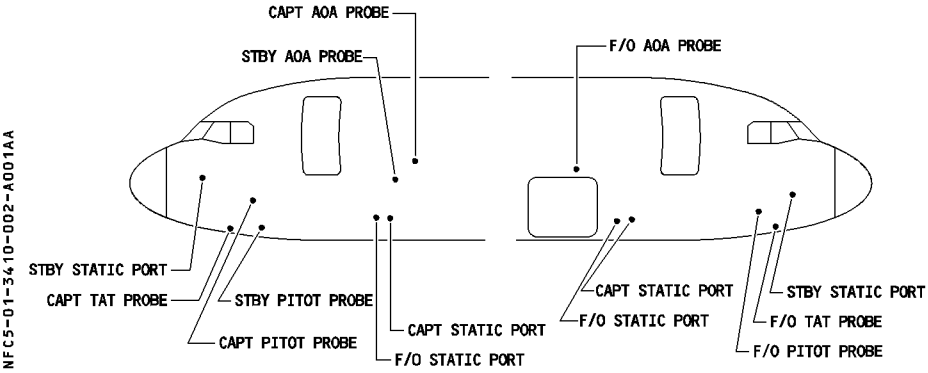

PROBES SCHEMATIC

R

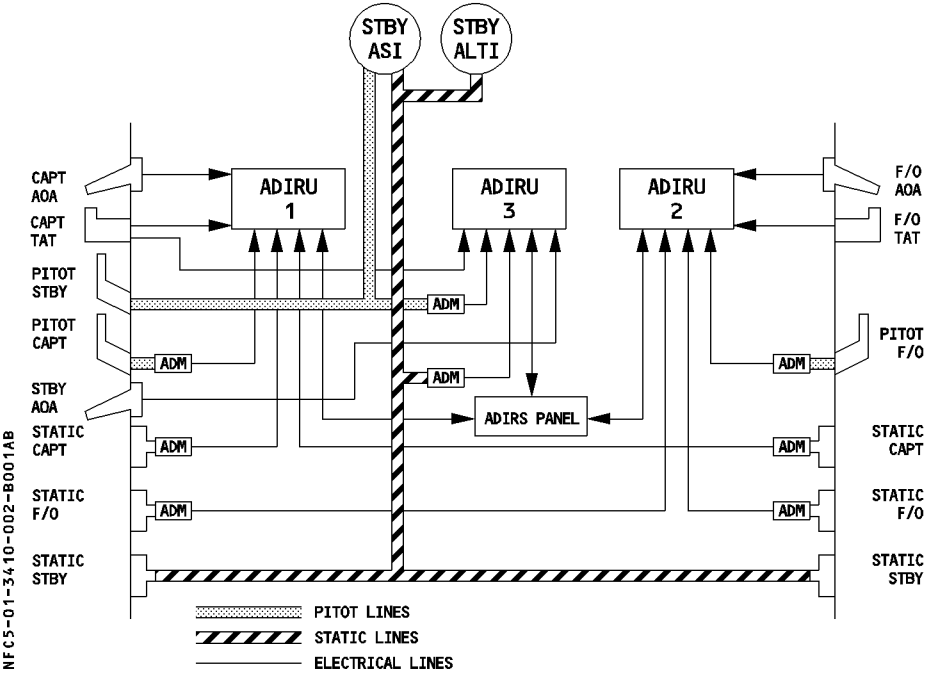

Note : ADIRU (1) is supplied by CAPT probes,
(2) is supplied by F/O probes,
(3) is supplied by STBY probes and CAPT TAT.

ADIRS SCHEMATIC

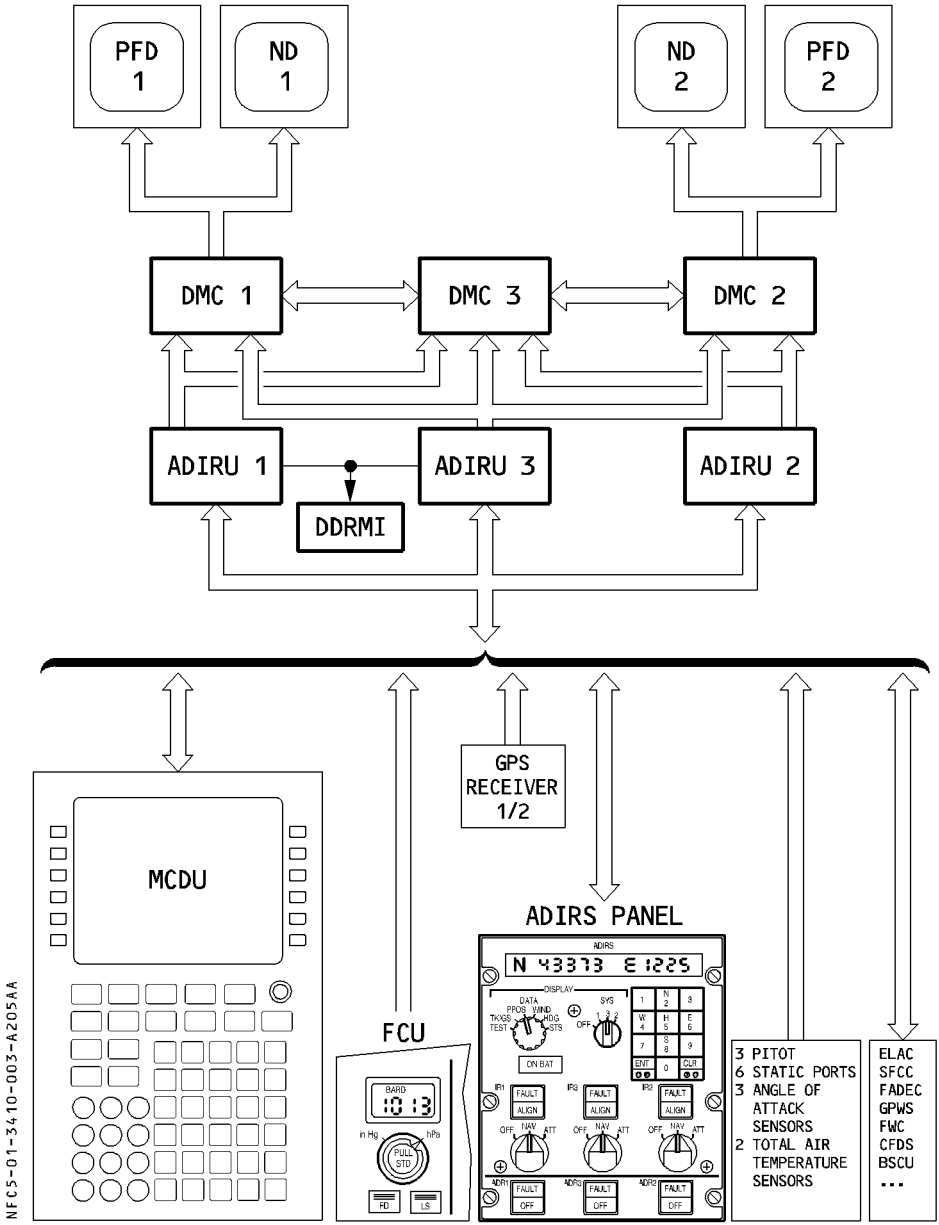

CONTROLS AND INDICATORS

OVERHEAD PANEL

R The ADIRS CDU on the overhead panel provides the controls and indicators to permit :
- selection of power supplies to the ADR and IR systems
- selection and display of navigation data
- manual initialization (normally performed through the FMGC)
- status and fault indication of IRs or ADRs.

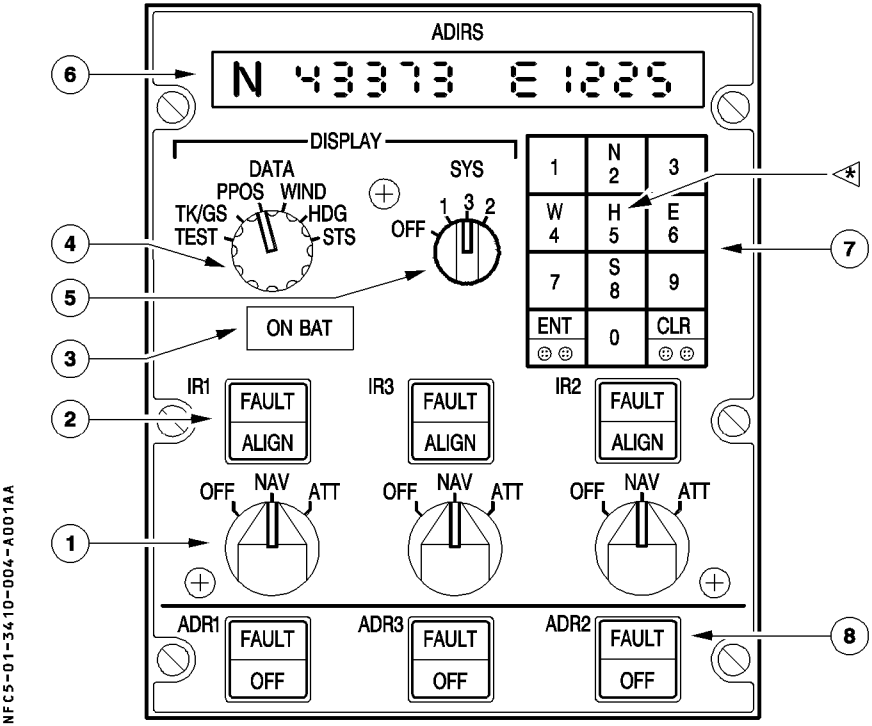

(1) IR 1(2)(3) Mode rotary sel :

OFF : The ADIRU is not energized. ADR and IR data are not available.
NAV : Normal mode of operation. Supplies full inertial data to aircraft systems.
ATT : IR mode supplying only attitude and heading information if the system loses its ability to navigate.
The heading must be entered through the CDU keyboard and has to be reset frequently (about every 10 minutes)

② IR 1 (2) (3) lt

R FAULT : Comes on amber associated with an ECAM caution when a fault
R affects the respective IR.
R Steady : the respective IR is lost.
R Flashing : the attitude and heading information may be
R recovered in ATT mode.
R ALIGN : Steady : the respective IR is operating normally in align mode.
R Flashing if : IR alignment fault, or no present position entry after
R 10 min, or difference between position at shutdown
R and entered position exceeds 1° of latitude or
R longitude.
R Extinguished : Alignment has been completed.

③ ON BAT lt

Comes on amber when one or more IRs is supplied only by the a/c battery. It also comes on for a few sec at the beginning of the alignment, but not for a fast realignment.

Note : If, when the aircraft is on the ground, at least one ADIRU is supplied by aircraft batteries :
– an external horn sounds
– the ADIRU and AVNCS light comes on blue on the EXTERNAL POWER panel.

④ DATA selector knob

This knob selects the information to be displayed in the ADIRS display window.

TEST The ENT and CLR buttons on the keyboard come on, and the display shows all 8's.
TK/GS The display shows true track and ground speed.
PPOS The display shows present latitude and longitude
WIND The display shows true wind direction and speed.
HDG The display shows true heading and the minutes remaining until alignment is completed.
STS The display shows an action code.

⑤ SYS selector knob

OFF : The CDU display is not energized. ADIRS are still energized if the associated IR mode rotary selectors are not at OFF.
1.2.3 : System selected for data display.

⑥ Display

The display presents the data selected by the DATA selector.
A keyboard entry overrides the selected display.

⑦ Keyboard

The flight crew can use the keyboard to enter the present position, or the heading in ATT mode, into the selected system.

Letter keys : Used to enter N, S, E, or W for position, or entering H (◁) for heading (ATT mode).

Number keys : Used to enter the present position (or the present magnetic heading in ATT mode).

CLR key : The integral cue light comes on after an entry operation, if the data has an unreasonable value.
Pressing this key clears the data display, that has been keyed in but not yet entered.

ENT Key : The integral cue light comes on when a crewmember has keyed in a number for N, S, W, E or H (◁).
Pressing the key enters data into the ADIRS.

R ⑧ ADR 1 (2) (3) pb (momentary action)

OFF Air data output disconnected.

FAULT This amber light comes on with an ECAM caution, if a fault is detected in the air data reference part.

PEDESTAL

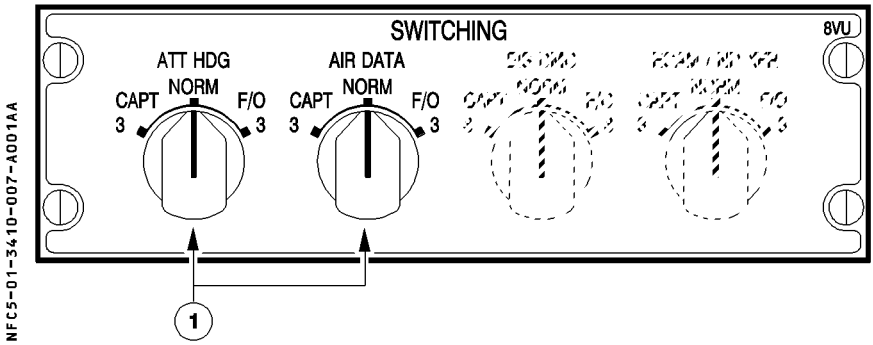

(1) ATT HDG and AIR DATA sel

NORM : ADIRU 1 supplies data to PFD 1, ND 1, RMI and VOR/DME.
ADIRU 2 supplies data to PFD 2, and ND2.
CAPT 3 : ADR 3 or IR 3 replaces ADR 1 or IR 1.
F/O 3 : ADR 3 or IR 3 replaces ADR 2 or IR 2.

WARNINGS AND CAUTIONS

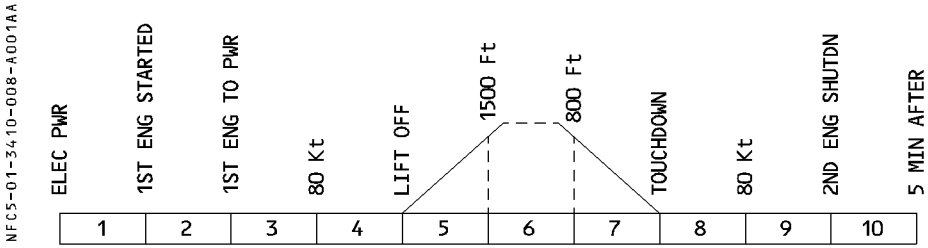

R

E / WD: FAILURE TITLE conditions	AURAL WARNING	MASTER LIGHT	SD PAGE CALLED	LOCAL WARNING	FLT PHASE INHIB
STALL WARNING (No ECAM message) An aural stall warning is triggered when the AOA is greater than a predetermined angle This angle depends on the : – Slats/Flap position – Speed/Mach – F/CTL law (normal, alternate/direct)	CRICKET+ STALL (SYNTHETIC VOICE)	MASTER WARN	NIL	NIL	GND
OVERSPEED – VMO/MMO Aircraft speed/mach greater than VMO + 4 kt/MMO + 0.006 – VLE Aircraft speed greater than VLE + 4 kt, with L/G not uplocked, or L/G doors not closed – VFE Aircraft speed greater than VFE + 4 kt, with slats or/and flaps extended	CRC				2, 3, 4 8, 9,10
ADR 1 (2) FAULT	SINGLE CHIME	MASTER CAUT		ADR FAULT lt	1, 4,8,10
ADR 3 FAULT					1,4,5 7,8,10
ADR (1+2) (1+3) (2+3) FAULT					1,4,8,10
IR 1 (2) FAULT				IR FAULT lt	4,5,7,8
IR 3 FAULT					4,5 7,8
IR (1 + 3) (2+3) FAULT					4, 8
IR 1 + 2 FAULT					

E / WD: FAILURE TITLE conditions	AURAL WARNING	MASTER LIGHT	SD PAGE CALLED	LOCAL WARNING	FLT PHASE INHIB
HDG DISCREPANCY difference between heading on CAPT and F/O displays greater than 5°	SINGLE CHIME	MASTER CAUT	NIL	CHECK HDG (on PFD and ND)	4,8
ATT DISCREPANCY difference between roll or pitch angle displayed on CAPT and F/O PFD dgreater than 5°				CHECK ATT (on PFD)	3, 4,8
ALTI DISCREPANCY difference between altitude displayed on CAPT and F/O PFD greater than : – 500 ft if baro ref STD is selected – 250 ft if QNH (or QFE) is selected				CHECK ALT (on PFD)	
BARO REF DISCREPANCY difference between CAPT and F/O sides				NIL	

MEMO DISPLAY

· This displays shows IRS IN ALIGN X MN during phase 1 or 2 if :
  – at least one active IRS is in ALIGN submode
  – the time remaining until NAV mode is obtained, is X minutes ($1 < x < 10$).
· IRS IN ALIGN appears if one of the 3 IRS is still in alignment
These 2 messages are displayed :
– in green if both engines are stopped
– in amber if one engine is running.

DESCRIPTION

The Global Positioning System (GPS) is a satellite based radio navigation aid.
Worldwide 24 satellites broadcast accurate navigation data that aircraft can use for the precise determination of its position.
The aircraft has two independent GPS receivers. Each GPS receiver is integrated in a modular avionics unit called MMR (Multi Mode Receiver) (GPS 1 receiver in MMR1, GPS2 receiver in MMR2).

R The MMR processes the data received and transfers them to the ADIRUs, which then perform a GP-IRS hybrid position calculation. The FMGCs use the hybrid position. The GPS MONITOR page on MCDU1 or MCDU2 can display pure GPS position, true track, ground speed, estimated position, accuracy level, and mode of operation for the information and use of the flight crew.

Note : Flight crew can use the MCDU NAVAID page to deselect the use of GPS data for calculating position (refer to FCOM 4.03.20).

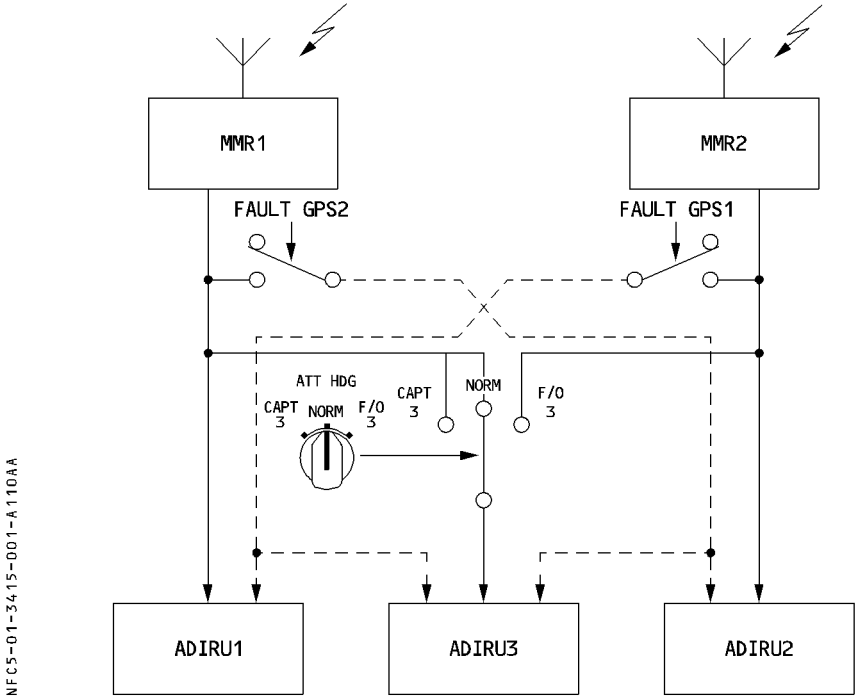

NORMAL OPERATION

In normal operation, the GPS receiver 1 supplies ADIRU 1 and ADIRU 3, the GPS receiver 2 supplies ADIRU 2.

The MMR operates in different modes which are indicated on the GPS MONITOR page :

R

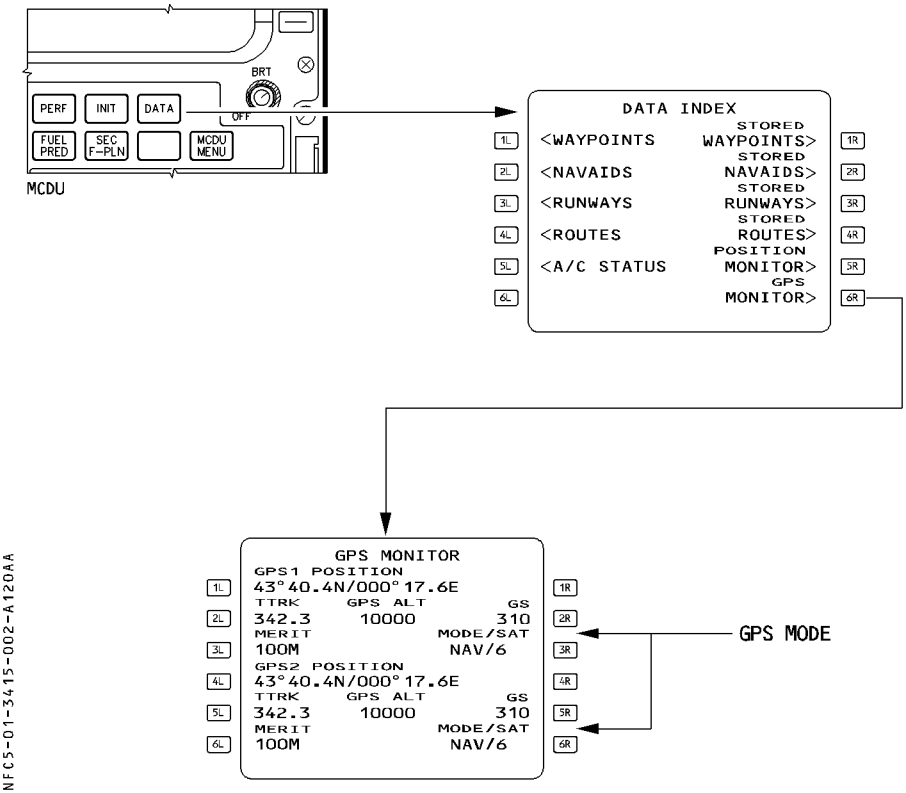

R — **Initialization mode (INIT)**

R When this mode is entered, the GPS hardware and software are initialized.

— **Acquisition mode (ACQ)**

The MMR enters in this mode after power-up or during long periods of lost satellite signal. It remains in this mode until it is able to track at least 4 satellites, then transfers to NAV mode. To enter navigation mode more quickly, MMR uses initial position, time and altitude from IRS.

– **Navigation Mode (NAV)**
When the MMR can track 4 or more satellites, it enters NAV mode and continuously supplies data to the ADIRUs.

– **Altitude Aiding (ALTAID)**
If the MMR can track at least 4 satellites, it uses the GPS altitude and the IR altitude to calculate an altitude bias.
If the number of satellites drops to three, the altitude bias is frozen and the MMR enters
R ALTAID mode, using the IR altitude (corrected with the altitude bias).

– **Fault Mode (FAULT)**
The fault mode is entered when a failure, which may prevent the MMR from transmitting valid data, has been detected.

OPERATION IN CASE OF FAILURE

If one GPS receiver fails, the three ADIRUs automatically select the only operative GPS receiver. If ADIRU 1 fails, ADIRU 3 is supplied by MMR 1, and ADIRU 2 is supplied by MMR 2. To maintain Side 1 and Side 2 segregation, in case ADIRU 2 fails, the ATT HDG selector must be set to F/O 3, so that ADIRU 3 will be supplied with MMR 2 data. If two ADIRUs fail, the remaining ADIRU is supplied by its own side GPS receiver.

WARNINGS AND CAUTIONS

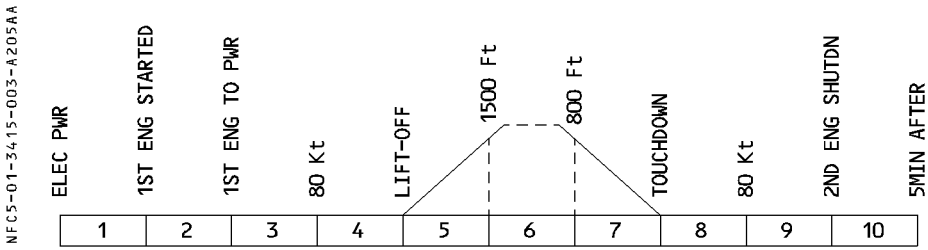

E / WD: FAILURE TITLE conditions	AURAL WARNING	MASTER LIGHT	SD PAGE CALLED	LOCAL WARNING	FLT PHASE INHIB
GPS 1 (2) FAULT	SINGLE CHIME	MASTER CAUTION	NIL	NIL	4, 5, 7, 8
FM/GPS POS DISAGREE					1, 3, 4, 10
GPS PRIMARY LOST (No ECAM warning)	TRIPLE CLICK During non ILS approach only	NIL			2,3,4,5 8,9,10

COMPASS

There is a compass located is on top of the windshield center post.
The deviation card is located above the compass.

Note : Because of the location of the APU power on contactor in the cockpit, the APU start sequence may disturb the compass reading.

NFCS-01-3420-001-A001AA

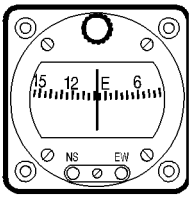

HORIZON

The electric standby horizon normally obtains current from the DC ESS BUS. In the case of a total electrical failure, the horizon remains usable for 5 minutes.

R *Note : When leveling the wings, after performing a small turn of a small bank angle, the*
R *displayed roll attitude may temporarily be incorrect by a few degrees.*

NFCS-01-3420-001-B001AA

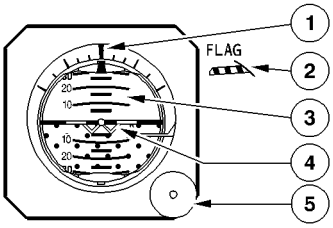

(1) Roll scale

The roll scale indicates the bank angle. It has bank angle graduations up to 60°. There is no rotation limit.

(2) Flag

The flag appears if the instrument fails or if power supply fails.

(3) Pitch scale

The pitch scale indicates the pitch attitude. It can show pitch angle up to ± 85°.

④ Aircraft reference

Fixed symbol.

⑤ Caging knob

The flight crew pulls it out to reinitialize the gyro, and to level and center the horizon. (The airplane should be level during this procedure).

R *Note : After low-rate turns, the standby horizon may not give accurate indications. To*
R *correct this behavior, use the caging knob when the aircraft is level.*

AIRSPEED INDICATOR

NFC5-01-3420-002-A001AA

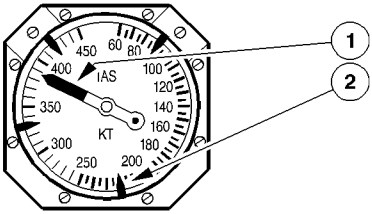

① Airspeed pointer

② Airspeed bugs (4)

For marking airspeed references.

ALTIMETER

NFC5-01-3420-002-B001AA

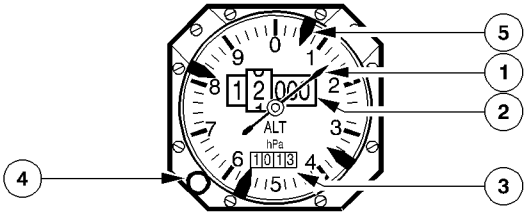

① Altitude pointer

② Altitude counter (feet)

③ Altimeter setting

Displays the pressure setting in hPa.

(4) Altimeter setting knob

(5) Altitude bugs (4)

For marking of altitude references.

ALTIMETER (in meter)

NFC5-01-3420-003-A100AA

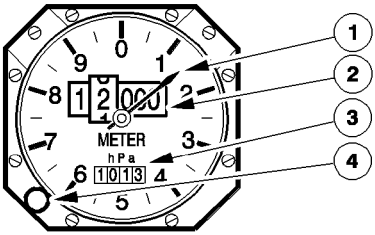

(1) Altitude pointer

(2) Altitude counter (meter)

(3) Altimeter setting

Display pressure setting in hPa

(4) Altimeter setting knob

TUNING

The FMGC is the basic means for tuning navaids.
Three modes of tuning are available.

AUTOMATIC TUNING

In normal operation, the FMGC tunes navaids automatically, with each FMGC controlling its own receivers.
If one FMGC fails, the remaining one controls both sides receivers.

MANUAL TUNING

The crew can use the MCDU to override the FMGC's automatic selection and tuning of navaids and select a specific navaid for visual display.
This does not affect the automatic function of the FMGC. Any entry on one MCDU is sent to both FMGC in dual mode, or the remaining FMGC in single.

BACK UP TUNING

If both FMGCs fail, the flight crew can use the RMPs (Radio Management Panels 1 and 2) on the pedestal for back up tuning.
R The CAPT RMP controls VOR 1 and ADF 1 ◁.
R The F/O RMP controls VOR 2 and ADF 2 ◁.
Either RMP controls both ILSs (provided NAV back up is selected on RMP 1 and RMP 2).
RMP 3 (if installed) is not used for navaids tuning.

ARCHITECTURE

Normal operation

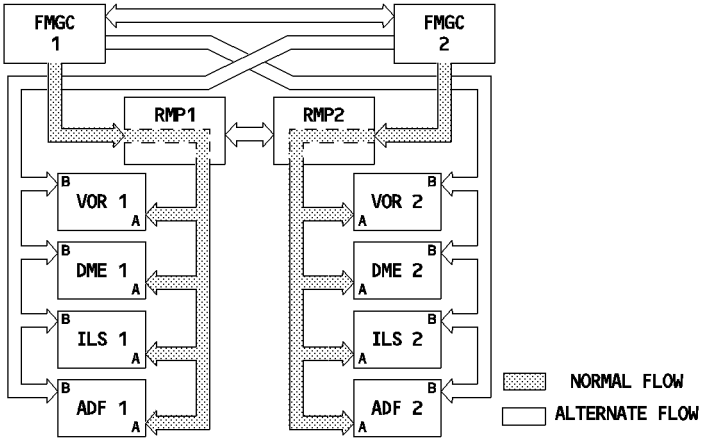

NFC5-01-3430-001-A001AA

FMGC 1 failure

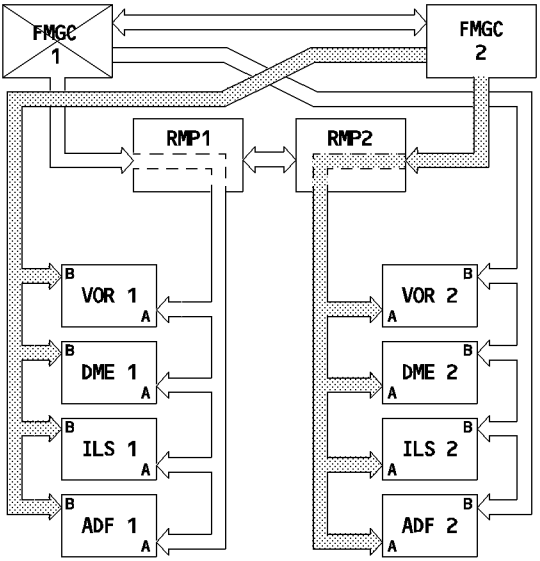

NFC5-01-3430-002-A001AA

Back up tuning

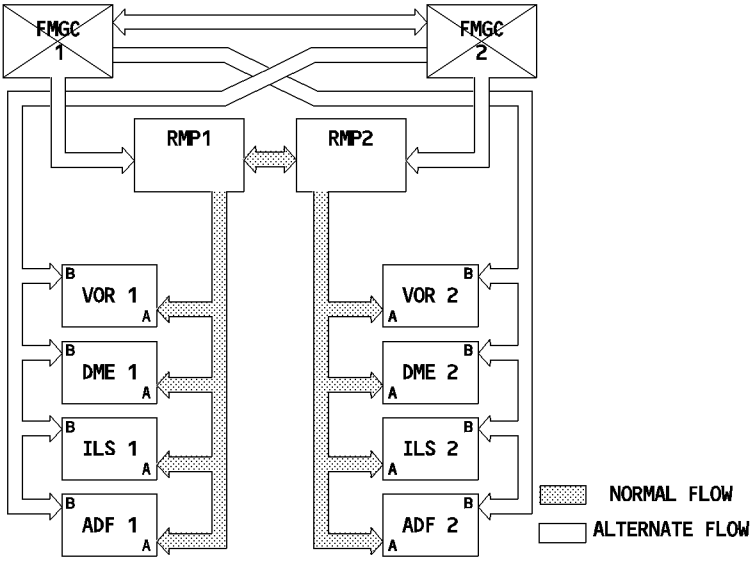

NFC5-01-3430-002-B001AA

NAVAIDS

VOR

The aircraft has two VOR receivers.
(For tuning instructions, refer to the TUNING paragraph).
- The Navigation Displays (NDs) show VOR1 and VOR2 information, in accordance with the position of the ADF/VOR selectors on the EFIS control panel (refer to 1.31).
- The DDRMI on the center panel also displays VOR1 and VOR2 bearings, if the heading signal is valid.

ILS

The aircraft has two ILS receivers. Each ILS receiver is integrated in a modular avionics unit called MMR (Multi Mode Receiver) (ILS1 receiver in MMR1, ILS2 receiver in MMR2).
(For tuning instructions, refer to the TUNING paragraph).
- PFD1 and ND2 display ILS1 information.
- PFD2 and ND1 display ILS2 information.
- The flight crew can put the same ILS information on each PFD by pressing the LS button on the EFIS control panel (the green bars come on).
- The NDs display ILS information, if the flight crew selects the ROSE LS mode on the EFIS control panel (refer to 1.31).

ADF

The aircraft has two ADF systems.
(For tuning instructions refer to the TUNING paragraph).
- The NDs display ADF information, depending on the position of the ADF/VOR selectors on the EFIS control panel (refer to 1.31).
  The DDRMI ◁ also displays ADF1 and ADF2 bearings, depending on the position of the ADF/VOR selector (on the DDRMI).

DME

The aircraft has two DMEs.
The frequency that is automatically set on the DME corresponds to the one that is set on the VOR or ILS.
The NDs and the DDRMI can display VOR DME information, and the PFDs can display ILS DME information (refer to 1.31).

MARKER BEACON

One marker beacon system is included in VOR receiver 1.
The PFD displays the outer, middle, and inner marker signals (refer to 1.31).

CONTROLS AND INDICATORS

DIGITAL DISTANCE AND RADIO MAGNETIC INDICATOR (DDRMI)

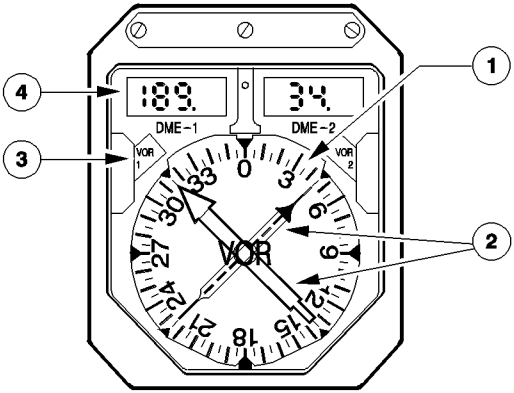

NFC5-01-3430-004-A001AA

(1) Compass card

ADIRU 1 normally supplies the signal that positions the compass card. ADIRU3 supplies it when selected by the ATT HDG SWITCHING selector.

(2) Bearings pointers

Indicate the magnetic bearing to the station received by VOR 1 (dashed pointer) and VOR 2 (double pointer).

Note : *Depending on the quality of the VOR beacon's signal, and mainly at distances greater than 25 NM from the station, the processing of the signal, on aircraft equipped with COLLINS or BENDIX VOR may lead to bearing pointer oscillations.*

(3) VOR 1(2) flags

The indicators display these flags if :
- the VOR receiver fails
- the RMI has an internal failure
- the heading signal from ADIRS is not valid
- the power supply fails.

As long as the flag shows, the relevant pointer remains at the last valid position.

(4) DME 1(2) counters

The counters indicate distances in NM and 1/10th at less than 20 NM.
At less than 1 NM, 0 is shown.

LEFT INTENTIONALLY BLANK

RADIO MAGNETIC INDICATOR (RMI)

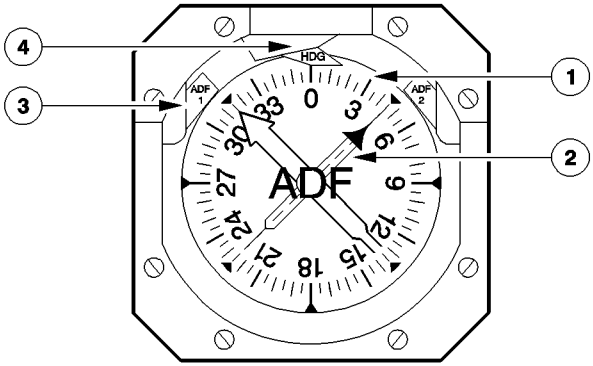

NFC5-01-3430-006-A103AA

① Compass card

ADIRU 1 normally supplies the signal that positions the compass card. ADIRU3 supplies it when selected by the ATT HDG SWITCHING selector.

② Bearing pointers

Indicate the magnetic bearing to ADF 1 (dashed pointer) and ADF 2 (double pointer).

③ ADF flag

The indicator displays this flag if :
– the ADF receiver fails
– the RMI has an internal failure
– the heading signal from ADIRS is not valid
– the power supply fails.
As long as the flag shows, the relevant pointer goes to the 3 o'clock position (except in case of power supply failure).

④ HDG flag

This red flag is displayed when :
– the heading signal from ADIRS is not valid
– malfunction of heading indication
– the power supply fails.
The HDG flag appears associated with the ADF flag.

RADIO MANAGEMENT PANEL (RMP)

R

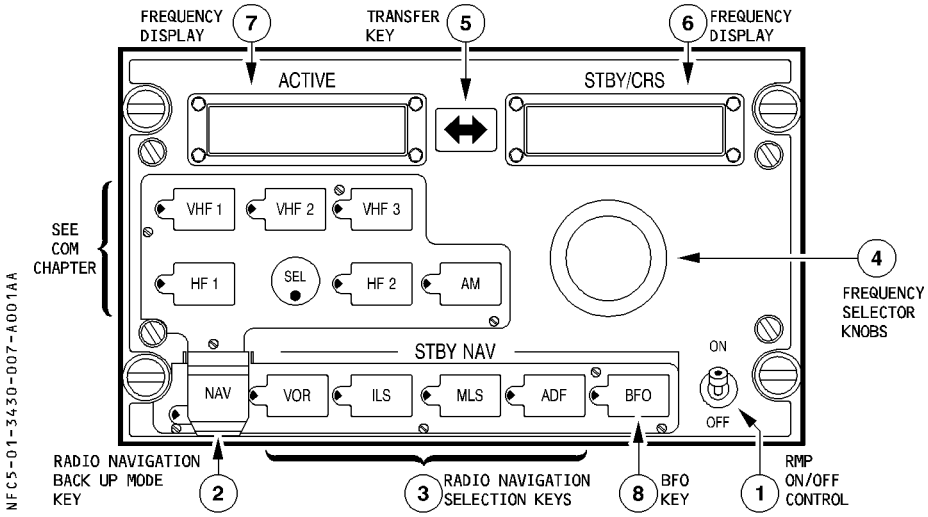

(1) ON/OFF sw

This switch controls the power supply to the panel.

(2) NAV key (transparent switchguard)

- Pressing this key engages the radio navigation backup mode. It takes control of the VOR, ILS, MLS, and ADF (◁) receivers away from the FMGC and gives it to the RMP.
- The green monitor light comes on.
- Pressing the NAV key a second time returns control of the navigation radios to the FMGC.

Note :
- *The flight crew must select this backup tuning mode on both RMP1 and RMP2 if both FMGCs or both MCDUs fail. In the emergency electrical configuration, only RMP1 receives power.*
- *Pressing the NAV key on RMP3 (if installed) has no effect.*
- *In the NAV backup mode, the flight crew can select radio communication systems as it would in the normal mode.*
  Setting one RMP to NAV backup mode removes navaids tuning from both FMGCs.
- *When the flight crew uses an RMP to turn an ILS/DME, the PFDs do not display the DME distance.*

③ STBY NAV keys

When the NAV key is on and the flight crew presses one of these STBY NAV keys, the ACTIVE window displays the frequency to which that receiver is tuned. The green monitor light on the selected key comes on, and the one on the previously selected STBY NAV or COM key goes out.

④ Frequency selector knob

Two concentric knobs allow the flight crew to preselect frequencies for communication radios and stand-by navigation systems and select courses for VOR and ILS.
The desired frequency or course is set in the STBY/CRS window.
- setting frequency :
  The outer knob controls the most significant digits, the inner knob controls the least significant digits. A rate multiplier speeds up the tuning when the knob is rotated rapidly.
- setting course :
  Selected by inner knob only.

⑤ Transfer key

The flight crew presses this key to interchange ACTIVE and STBY frequencies. This action tunes the selected receiver to the new ACTIVE frequency.

⑥ STBY/CRS window

The flight crew can make the frequency displayed in this window become the active frequency by pressing the transfer key, or change it by rotating the tuning knob.
If this window displays a course, then the ACTIVE window displays the associated frequency.

Note : If the STBY/CRS window is displaying a course, then pressing the transfer key displays the active frequency in both windows.

R

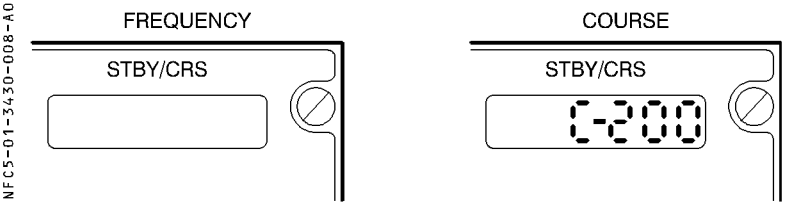

NFC5-01-3430-008-A001AA

⑦ ACTIVE window

This window displays the frequency of the selected navaid, which is identified by a green monitor light on the selection key.

⑧ BFO key

Pressing this key activates the BFO (Beat Frequency Oscillator), if the ADF receiver is selected.
The green monitor light comes on.
R For most ADF, with BFO activated, the audio identification is heard. However there are
R some ADF where the BFO must be deactivated in order to hear the audio identification.

DESCRIPTION

The aircraft has two radio altimeters.
Normally the CAPT PFD displays the RA1 height and the F/O PFD displays the RA2 height.
If either radio altimeter fails, both PFDs display the height from the remaining one.

INDICATIONS ON PFD

(Refer to 1.31).

AUTOMATIC CALL OUT

FWC generates synthetic voice for radio height announcement below 2500 feet. These announcements come through the cockpit loudspeakers even if the speakers are turned off.

Predetermined call out

The altitude call out uses the following predetermined threshold :

height (ft)	call out
2500	TWO THOUSAND FIVE HUNDRED OR TWENTY FIVE HUNDRED
2000	TWO THOUSAND
1000	ONE THOUSAND
500	FIVE HUNDRED
400	FOUR HUNDRED
300	THREE HUNDRED
200	TWO HUNDRED
100	ONE HUNDRED
50	FIFTY
40	FORTY
30	THIRTY
20	TWENTY
10	TEN
5	FIVE
DH + 100	HUNDRED ABOVE
DH	MINIMUM

Pin programmings allow the operator to select the call outs needed.
If aircraft remains at a height that is in the detection zone for a height callout, the corresponding message is repeated at regular intervals.

Intermediate call out

If time between two consecutive predetermined call outs exceeds a certain threshold, the present height is repeated at regular intervals.
The threshold is : 11 seconds above 50 feet
4 seconds below 50 feet
The repeating interval is 4 seconds.

RETARD announcement

The loudspeaker announces RETARD at 20 feet or at 10 feet if autothrust is active and one autopilot is in LAND mode.

WARNINGS AND CAUTIONS

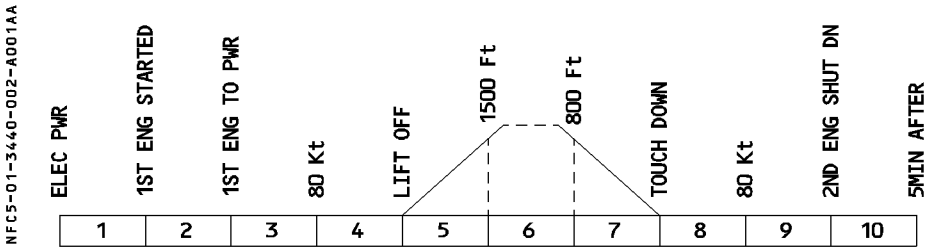

E / WD: FAILURE TITLE conditions	AURAL WARNING	MASTER LIGHT	SD PAGE CALLED	LOCAL WARNING	FLT PHASE INHIB
RA 1 (2) FAULT	SINGLE CHIME	MASTER CAUT	NIL	NIL	3, 4 5, 8

DESCRIPTION

The aircraft has two ATC transponders which are controlled by a dual control box on the center pedestal.
Only the selected transponder operates.
The associated ADIRS (1 for transponder 1, etc ...) supplies the altitude for altitude reporting. In case of a failure, ADIRS 3 can do this when selected by the AIR DATA SWITCHING selector.

CONTROL PANEL

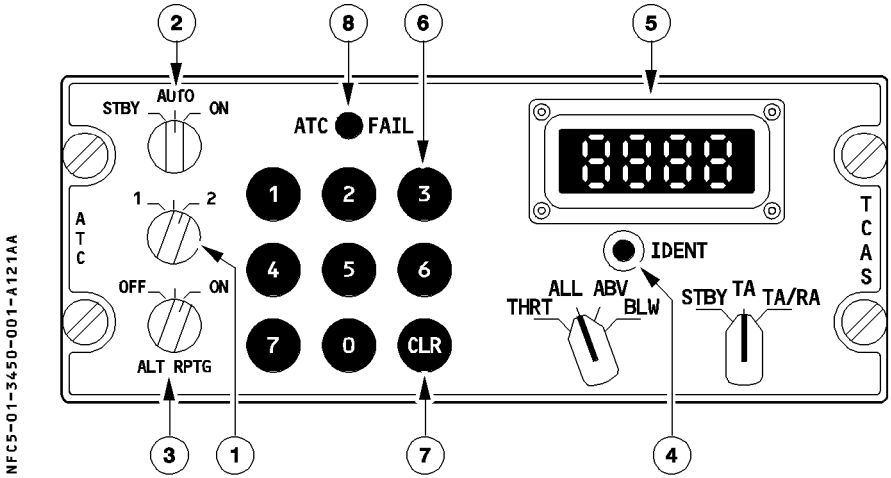

(1) ATC sel

This switch selects transponder 1 or 2.

(2) Mode sel

STBY : Both ATC transponders are electrically supplied but do not operate.
ON : Selected transponder operates.
R AUTO : In flight : Selected transponder operates.
R AUTO : On ground : Selected transponder operates only in mode S (Selective aircraft
R interrogation mode).

③ ALT RPTG sw

ON : The transponder sends barometric standard altitude data.
OFF : No altitude data transmission. If the TCAS is installed, the upper ECAM displays "TCAS STBY" in green.

④ IDENT sw

The flight crew presses this button to send the aircraft identification signal.

⑤ Code display

The window displays the selected code.

⑥ Keyboard

The flight crew uses these pushbuttons to set the code assigned by ATC.

⑦ CLR pb

The flight crew uses this pushbutton to clear the code display.

Note : As long as the four figures of the new code are not entirely written, the previous code remains.

⑧ ATC FAIL

This light comes on if the selected transponder fails.

DESCRIPTION

The aircraft has one weather radar system.
It can display the weather image on the ND in any ND mode except PLAN.
Each pilot may remove the weather image from his ND by setting the associated brightness control to the minimum (refer to 1.31).

CONTROL PANEL

R

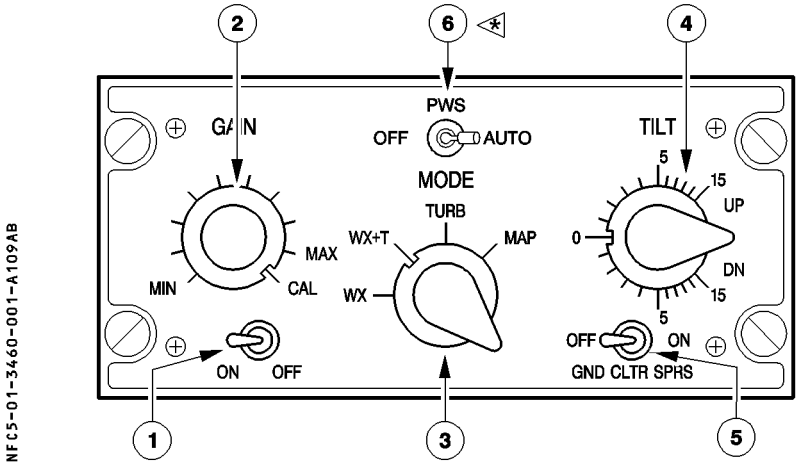

(1) SYS sw

This switch turns the radar on or off.

(2) GAIN knob

This knob is used to adjust the sensitivity of the receiver in all modes.
CAL is the normal position. It adjusts the gain to a calibrated setting.

③ Mode sel

WX : Weather mode : colors indicate the intensity of precipitation (black for the lowest intensity, green, amber and red indicating progressively higher intensities).
WX + T : The screen shows turbulence areas (in precipitation areas) in magenta (within 40 NM).
TURB : The screen shows only turbulence areas.
MAP : Radar operates in ground mapping mode : black indicates water, green, ground and amber, cities and mountains.

④ TILT knob

This knob controls antenna tilt. Zero represents the horizon as ADIRS 1 sees it (or ADIRS 3 if ATT HDG selector is at CAPT 3).

⑤ GND CLTR SPRS sw

ON : Suppresses the ground echo on the screen.
OFF : Normal use of the radar.

R ⑥ PWS sw ◁ (operative only if the predictive windshear function is embodied)

R AUTO : Predictive windshear function is activated : windshear areas are detected by
R the antenna scanning below 2300 feet RA, even if the SYS switch is set to
R OFF, and displayed on the ND if below 1500 feet.
R OFF : No predictive windshear function.

WINDSHEAR PREDICTION FUNCTION

The weather radars have a Predictive Windshear System (PWS) that operates when :

R – The PWS switch is in the AUTO position (Even if the weather radar is OFF), and
– The aircraft is below 2300 feet AGL, and
– The ATC is switched to the ON, or AUTO, or XPDR, or XPNDR, position (depending on the ATC panel), and
– Either engine is running.

R *Note : When two weather radars are installed, if the selected weather radar fails, the PWS*
R *function is recovered by selecting the non-failed weather radar on the control panel.*

The system scans the airspace, within a range of 5 NM ahead of the aircraft, for windshears. Below 1500 feet, when the system detects windshear, depending on the range selected on the ND, a warning, caution, or advisory message appears on the ND. Predictive windshear warnings and cautions are associated with an aural warning.

R **WINDSHEAR ALERTS during takeoff roll, up to 100 knots**
R

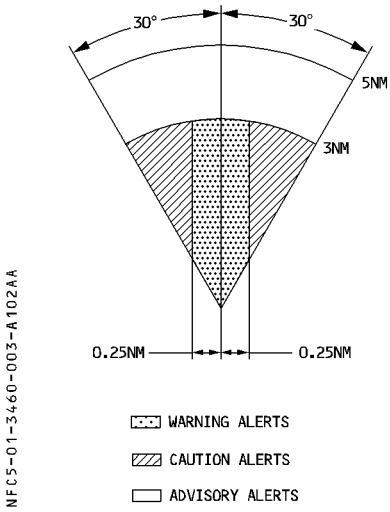

R During the takeoff roll, up to 100 knots, both warnings and cautions are available within a
R range of 3 NM.

WINDSHEAR ALERTS above 50 feet

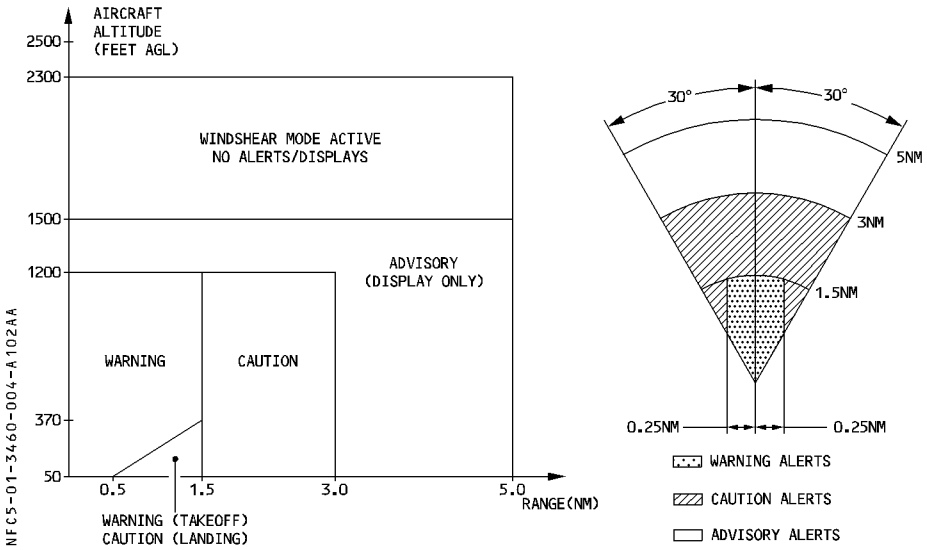

During final apporach, the visual and aural warning alerts are downgraded to caution alerts between 370 feet AGL and 50 feet AGL, and range between 1.5 NM and 0.5 NM.

WINDSHEAR ALERTS inhibition

At takeoff, alerts are inhibited above 100 knots and up to 50 feet. During landing, alerts are inhibited below 50 feet.

Alert Level	Aural Warning	PFD	ND (refer to 1.31.45)
Warning (Approach)	«GO AROUND WINDSHEAR AHEAD»	W/S AHEAD (red)	Windshear icon
Warning (Takeoff)	«WINDSHEAR AHEAD» (twice)	W/S AHEAD (red)	Windshear icon
Caution	«MONITOR RADAR DISPLAY»	W/S AHEAD (amber)	Windshear icon
Advisory	Nil	Nil	Windshear icon

The aural alerts of the Predictive Windshear System (PWS) :
- Have priority over TCAS, GPWS, and other FWC aural warnings
- Are inhibited by windshear detection, via the FAC, stall warnings and aural messages.

WARNINGS AND CAUTIONS

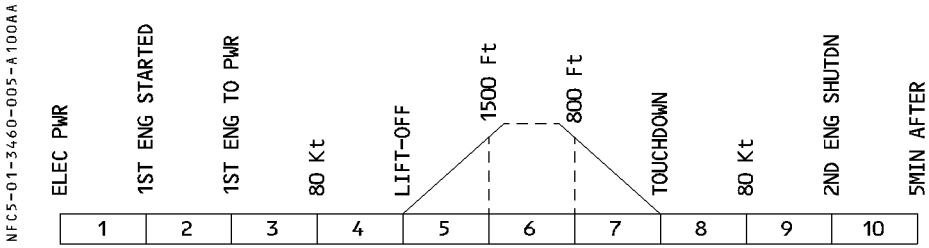

E/WD : FAILURE TITLE Conditions	AURAL WARNING	MASTER LIGHT	SD PAGE CALLED	LOCAL WARNING	FLT PHASE INHIB
PRED. W/S DET FAULT	SINGLE CHIME	MASTER CAUTION	NIL	NIL	3, 4, 5, 8

MEMO DISPLAY

The "PRED W/S OFF" message appears, when windshear is set to OFF on the weather radar panel.
The "PRED W/S OFF", message appears in green during fligth phases 1, 2, 6 and 10.
It appears in amber :
- In flight phases 3, 4, 5, 7, 8, and 9
- When the T.O. CONFIG pushbutton is pressed during phase 2.

DESCRIPTION

The Ground Proximity Warning System (GPWS) generates aural and visual warnings, when one of the following conditions occurs between radio altitudes 30 and 2450 feet.

- Mode 1 : Excessive rate of descent.
- Mode 2 : Excessive terrain closure rate.
- Mode 3 : Altitude loss after takeoff, or go-around.
- Mode 4 : Unsafe terrain clearance when not in landing configuration.
- Mode 5 : Too far below glideslope.

In addition to the basic GPWS functions, the GPWS has an enhanced function (EGPWS) which provides, based on a worldwide terrain database :

- A Terrain Awareness Display (TAD), which predicts the terrain conflict, and displays the terrain on the ND.
- R A Terrain Clearance Floor (TCF), which improves the low terrain warning during landing.

The cockpit loudspeakers broadcast, even if turned off, the aural warning or caution messages associated with each mode. The audio volume of these messages is not controlled by the loudspeaker volume knobs. (These knobs only allow volume adjustment for radio communication).

R GPWS lights come on to give a visual warning for modes 1 to 4, TAD, and TCF. For mode 5, the glideslope lights, on the Captain and First Officer instrument panels, come on.

Note : A number of airports throughout the world have approaches or departures that are not entirely compatible with standard GPWS operation. These airports are identified
R *in the envelope modulation database, in such a way that, when the GPWS recognizes such an airport, it modifies the profile to avoid nuisance warnings.*

FOR INFO

R

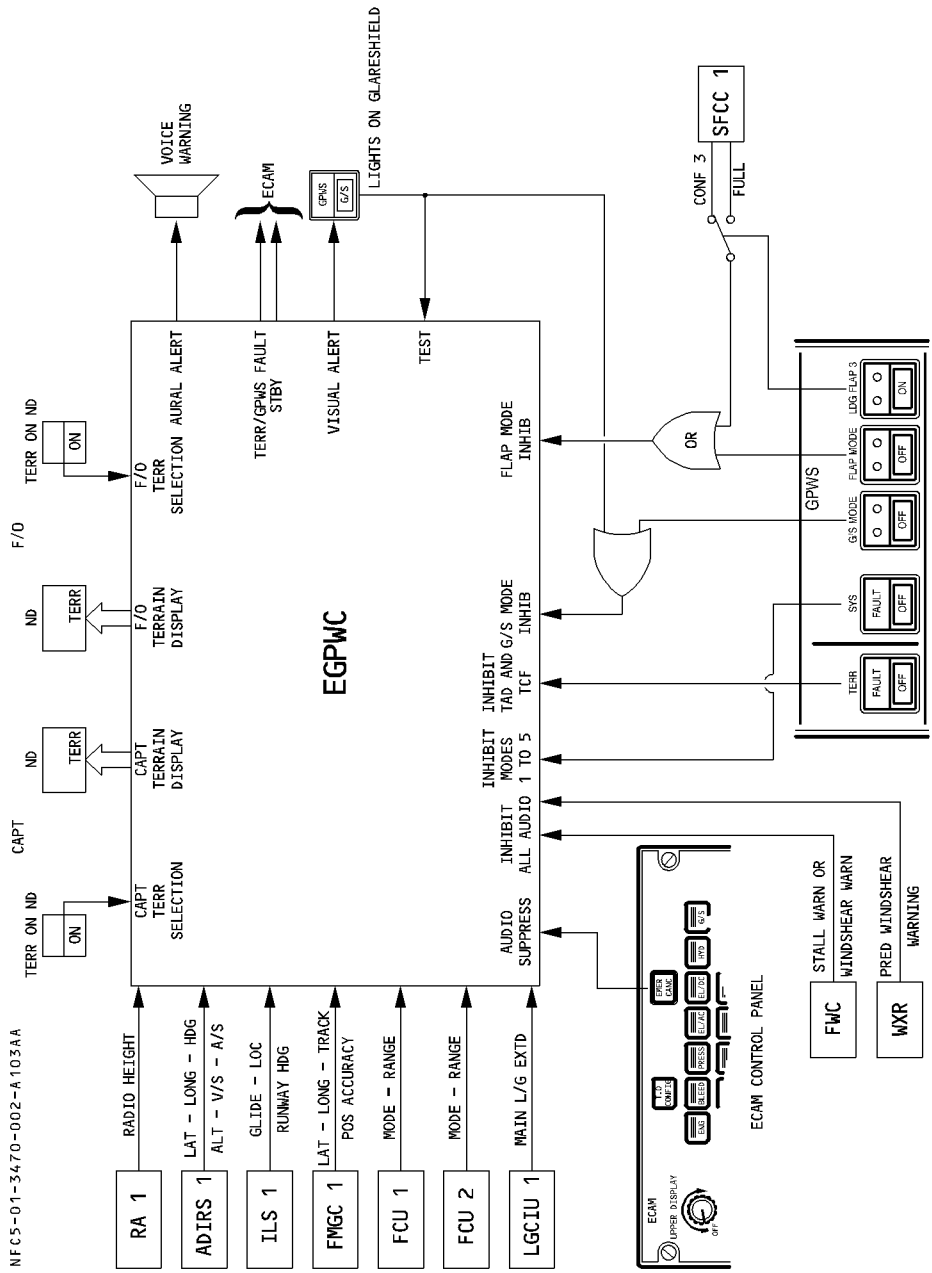
VOICE WARNING
ECAM
GPWS
G/S
LIGHTS ON GLARESHIELD
SFCC 1
CONF 3
FULL
TERR ON ND
ON
F/O
ND
TERR
CAPT
F/O TERR SELECTION AURAL ALERT
TERR/GPWS FAULT STBY
VISUAL ALERT
TEST
F/O TERRAIN DISPLAY
CAPT TERRAIN DISPLAY
CAPT TERR SELECTION
EGPWC
FLAP MODE INHIB
INHIBIT TAD AND G/S MODE TCF INHIB
INHIBIT MODES 1 TO 5
INHIBIT ALL AUDIO
AUDIO SUPPRESS
OR
GPWS
LDG FLAP 3
FLAP MODE
G/S MODE
SYS
TERR
FAULT
OFF
ON
RADIO HEIGHT
LAT - LONG - HDG
ALT - V/S - A/S
GLIDE - LOC
RUNWAY HDG
LAT - LONG - TRACK
POS ACCURACY
MODE - RANGE
MAIN L/G EXTD
RA 1
ADIRS 1
ILS 1
FMGC 1
FCU 1
FCU 2
LGCIU 1
ECAM
UPPER DISPLAY
OFF
ENG
F/CTL COMPUTR
BLEED
PRESS
ELEC AC
ELEC DC
HYD
G/S
ERGS CANC
ECAM CONTROL PANEL
STALL WARN OR WINDSHEAR WARN
PRED WINDSHEAR WARNING
FWC
WXR
NFC5-01-3470-002-A103AA

MODE 1: EXCESSIVE RATE OF DESCENT

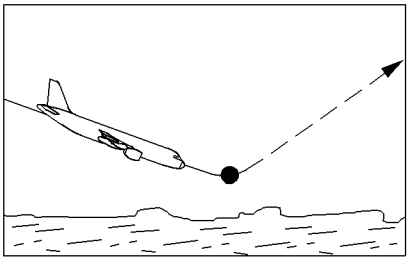

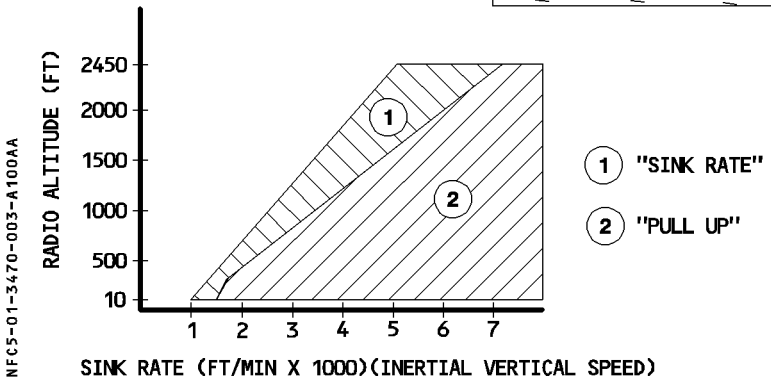

R Mode 1 has two boundaries. Penetration of the first boundary generates the illumination of
R the GPWS light and a repeated aural alert "SINK RATE". Penetration of the second boundary generates a repetitive "PULL UP".
R The upper cut-off limit is 2450 feet radio altitude.
R The lower cut-off limit is 10 feet radio altitude.

MODE 2 : EXCESSIVE TERRAIN CLOSURE RATE

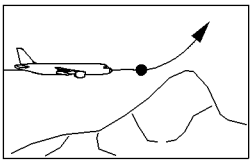

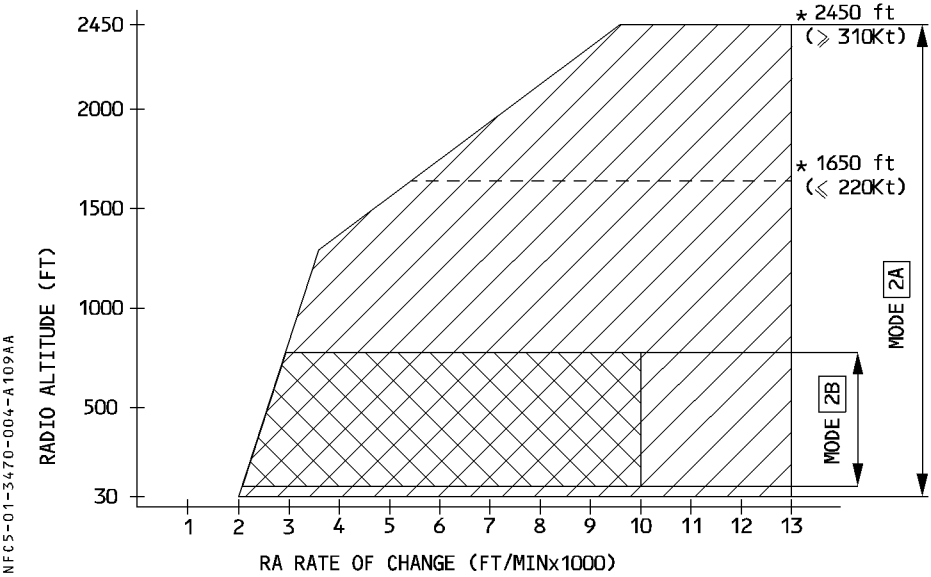

2A — Flaps not in landing configuration and aircraft not on the glide slope beam.
Penetration of the boundary lights up the GPWS lights and sounds the repeated aural alert: "TERRAIN".
After "TERRAIN" has sounded twice, the warning switches to "PULL UP", repeated continually until the aircraft leaves the warning envelope.
After the aircraft leaves the boundary, the GPWS lights stay on and the voice message "TERRAIN" persists. These alerts cease when the aircraft increases either the barometric or inertial altitude by 300 feet. If it enters another alert region during this altitude-gain time, then the whole process begins again with a new reference altitude for the 300 feet altitude gain.

* Upper cut-off limit varies from 1650 feet to 2450 feet radio altitude, depending on speed (between 220 knots to 310 knots). At certain airports, the upper boundary may be lowered down to 1250 feet to reduce the warning sensitivity and minimize the nuisance warnings.

2B — Flaps in landing configuration
Lowering the flaps to the landing position, automatically switches GPWS to Mode 2B. In this case, lower boundary varies between 200 feet and 600 feet depending on altitude rate. In ILS approach (glide slope deviation < ± 2 dots) the lower boundary is fixed at 30 feet. When the aircraft enters the envelope, the alert is the same as for mode 2A. When gear and flaps are in the landing configuration, the aural message is "TERRAIN " only, and is not followed by "PULL UP" if the aircraft remains in the envelope.

MODE 3 : ALTITUDE LOSS AFTER TAKEOFF

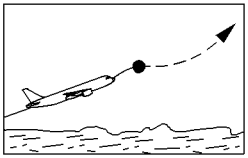

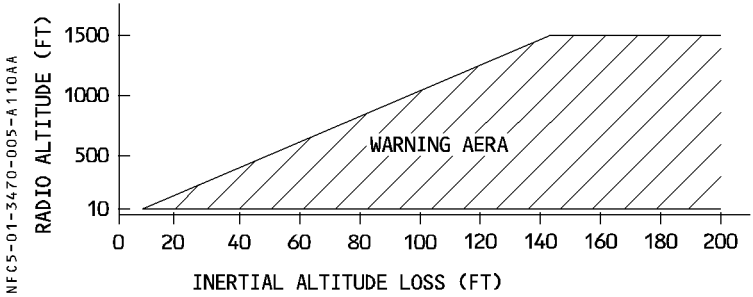

If the aircraft descends during the initial takeoff climb or during a go around, GPWS lights come on and the aural alert "DON'T SINK" sounds repeatedly.
The lower cut-off limit is 10 feet radio altitude.
Mode 3 is desensitized according to the time accumulated after departure and the radio altitude.

MODE 4 : UNSAFE TERRAIN CLEARANCE WHEN NOT IN LANDING CONFIGURATION

R 4A — Landing gear up.
R

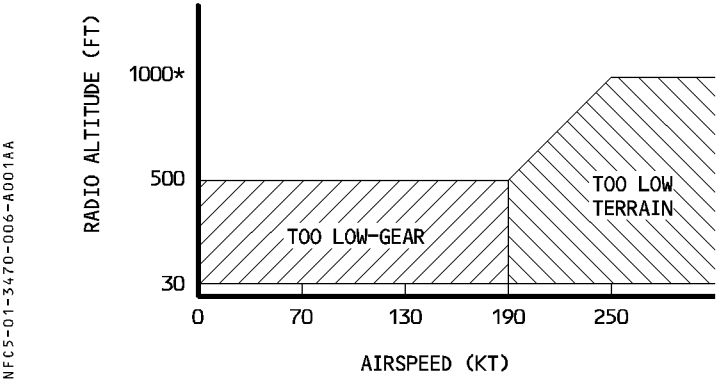

Two aural warnings may be triggered, depending on the area : "TOO LOW-GEAR" or "TOO LOW-TERRAIN".

R 4B — Landing gear down, and flaps not in landing configuration.
R

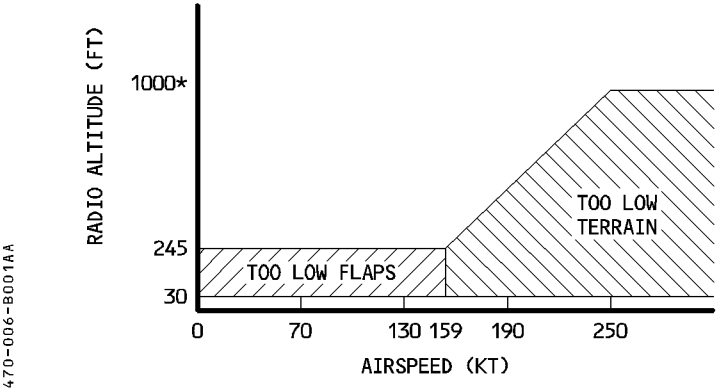

* : - OTHER MAXIMUMS ARE USED AT CERTAIN AIRPORTS TO MINIMIZE NUISANCE WARNINGS.
- THIS MAXIMUM IS ALSO REDUCED TO 800 FEET, WHEN AN OVERFLIGHT IS DETECTED

Three aural warnings may be generated, depending on the area and configuration : "TOO LOW-GEAR", "TOO LOW-FLAPS" or "TOO LOW-TERRAIN".

R 4C — Landing gear up, or flaps not in landing configuration.

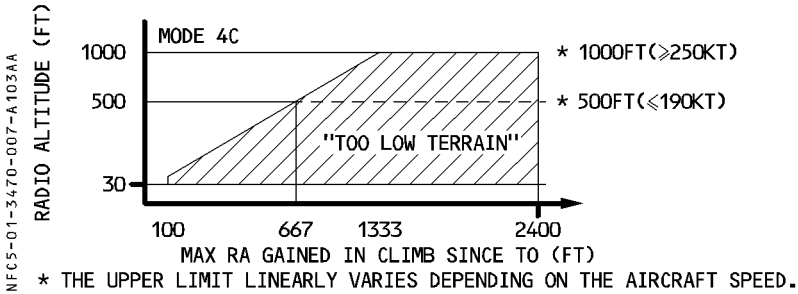

If the aircraft starts an inadvertant controlled flight into the ground, during takeoff and climb, and penetrates the boundary, then the GPWS lights come on, and the "TOO LOW TERRAIN" aural alert sounds repeatedly.

MODE 5 : DESCENT BELOW GLIDESLOPE

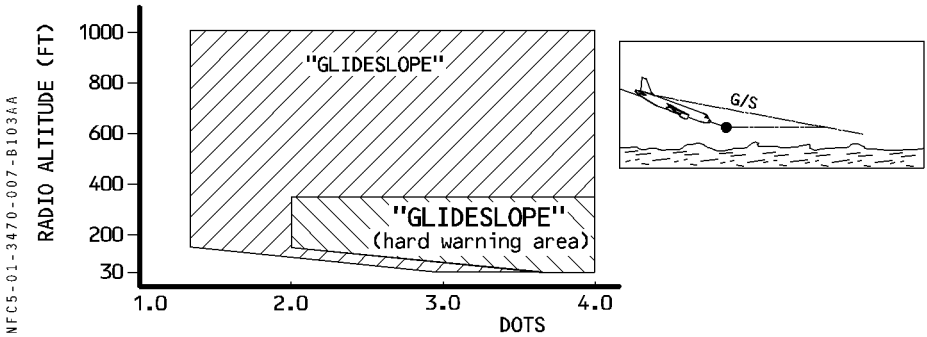

R *Note : Normally, the glideslope alert is only triggered with the gear down. For a few*
R *airports, the gear down logic requirement is deleted and other upper limits are used*
R *to increase the warning envelope.*

In both areas, the alert is a repeated "GLIDESLOPE" aural message and lighting of both G/S lights.
The loudness of the aural message increases, when the aircraft enters the hard warning areas.
The mode is armed, when ILS 1 receives a valid signal.
Pressing the GPWS pushbutton cancels the warning. This is temporary ; the mode is automatically reactivated for a new envelope.
The upper cut-off limit is 1000 feet radio altitude.
The lower cut-off limit is 30 feet radio altitude.

EGPWS FUNCTIONS

TERRAIN AWARENESS AND DISPLAY

The Terrain Awareness and Display (TAD) function computes a caution and a warning envelope in front of the aircraft, which varies according to aircraft altitude, nearest runway altitude, distance to the nearest runway threshold, ground speed, and turn rate. When the boundary of these envelopes conflicts with the terrain, memorized in the database, the system generates the relevant alert :

Alert Level	Aural Warning	ND (refer to 1.31.45)	Local Warning
Warning	TERRAIN AHEAD, PULL UP	– Automatic terrain display* – Solid red areas – TERR AHEAD (red)	The pb light comes on, on each pilot's instrument panel
Caution	TERRAIN AHEAD	– Automatic terrain display pop-up* – Solid yellow areas – TERR AHEAD (amber)	

* When the TERR ON ND pushbutton is selected ON, and ARC or ROSE mode is selected, the terrain is displayed on the ND. The terrain is displayed in various densitites of green, yellow, red, or magenta, depending on the threat. (see 1.31.45, INDICATIONS ON ND). If an alert is generated (caution or warning) when TERR ON ND is not selected, the terrain will be automatically displayed and the ON light of the TERR ON ND pushbutton will come on.

Note : 1. *When TERR ON ND is selected, the weather radar image is not displayed.*
R 2. *The relative height of the aircraft is computed using the Captain's baro setting.*
R *Thus, the Terrain Awareness Display (TAD) does not protect against baro setting*
R *errors.*
R 3. *The TAD and Terrain Clearance Floor (TCF) functions operate using the FMS 1*
R *position. Thus, the system does not protect against FMS 1 position error.*

If the crew identifies that navigation accuracy is low, then they must select the enhanced modes off via the TERR pushbutton. The 5 GPWS modes remain active.

TERRAIN CAUTION AND WARNING ENVELOPE

R

NFC5-01-3470-009-A100AA

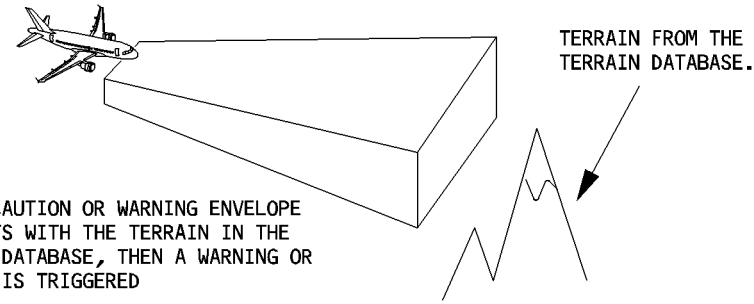

IF THE CAUTION OR WARNING ENVELOPE CONFLICTS WITH THE TERRAIN IN THE TERRAIN DATABASE, THEN A WARNING OR CAUTION IS TRIGGERED

VERTICAL ENVELOPE

R

NFC5-01-3470-009-B100AA

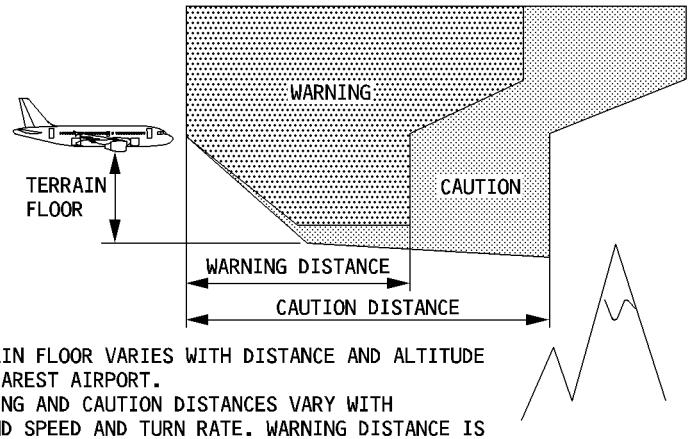

TERRAIN FLOOR VARIES WITH DISTANCE AND ALTITUDE TO NEAREST AIRPORT.
WARNING AND CAUTION DISTANCES VARY WITH GROUND SPEED AND TURN RATE. WARNING DISTANCE IS APPROX. 30 SECONDS. CAUTION DISTANCE IS APPROX. 60 SECONDS.

HORIZONTAL ENVELOPE

R

NFC5-01-3470-009-C100AA

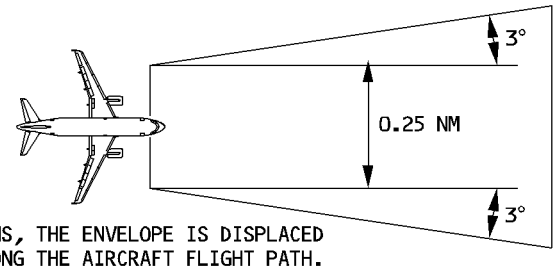

DURING TURNS, THE ENVELOPE IS DISPLACED TO LOOK ALONG THE AIRCRAFT FLIGHT PATH.

TERRAIN CLEARANCE FLOOR

A terrain clearance floor envelope is stored in the database for each runway for which terrain data exist. The Terrain Clearance Floor (TCF) function warns a premature descent below this floor, regardless of aircraft configuration.

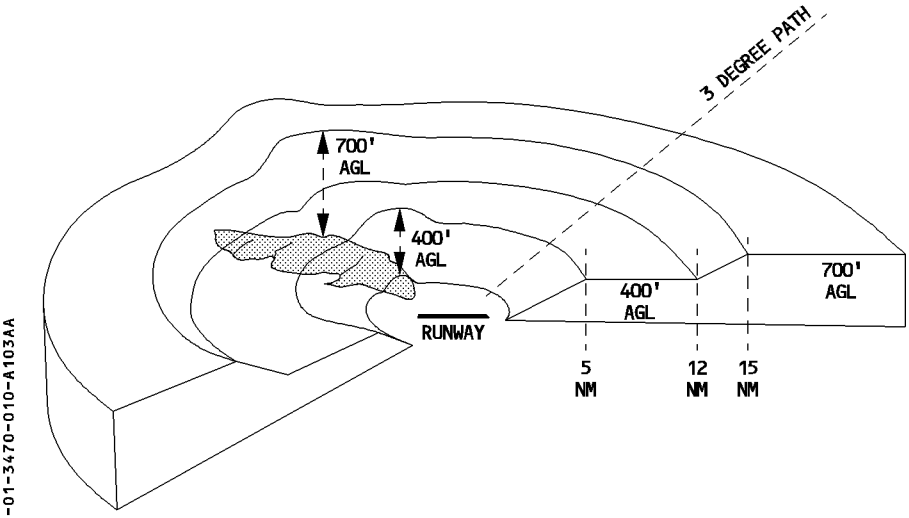

NFC5-01-3470-010-A103AA

If the airplane descends below this floor, a TOO LOW TERRAIN aural warning is announciated, and the pushbutton light comes on on glareshield.

CONTROLS AND INDICATORS

OVERHEAD PANEL

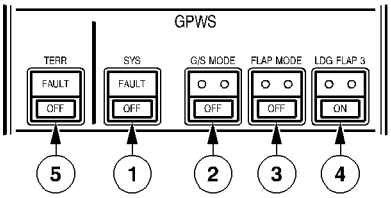

NFC5-01-3470-011-A100AA

(1) SYS pb

OFF : All basic GPWS alerts (Mode 1 to 5) are inhibited.
FAULT lt : This amber light comes on, along with an ECAM caution, if the basic GPWS mode 1 to 5 malfunction.

Note : If ILS 1 fails, only mode 5 is inhibited. Consequently, the FAULT light does not come on and the GPWS FAULT warning is not triggered.

(2) G / S MODE pb

OFF : Glideslope mode (mode 5) is inhibited.

(3) FLAP MODE pb

OFF : Flap mode ("TOO LOW FLAPS" mode 4) is inhibited.
(To avoid nuisance warning in case of landing with flaps setting reduced).

(4) LDG FLAP 3 pb

ON : Flap mode is inhibited when FLAPS CONF 3 is selected (to avoid nuisance warning in case of landing in CONF 3).
In this case, LDG MEMO displays FLAPS ... 3 instead of "CONF ... FULL".

(5) TERR pb

OFF : Inhibits the Terrain Awareness Display (TAD) and Terrain Clearance Floor
R (TCF) modes, and does not affect the basic GPWS mode 1 to 5. If OFF is
R selected the ECAM caution NAV GPWS TERR DET FAULT is displayed.
FAULT lt : This amber light comes on, along with an ECAM caution, if the TAD or
R TCF mode fails. The terrain is not shown on the ND. The basic GPWS mode 1 to mode 5 are still operative if the SYS pushbutton OFF or FAULT lights are not illuminated.

INSTRUMENT PANELS

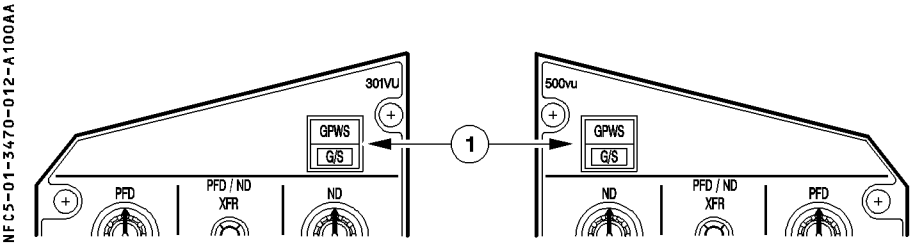

(1) GPWS – G / S pb

R GPWS : This red light comes on when any mode from 1 to 4, or any TAD or TCF alert is activated. A specific voice alert accompanies it.

G / S : This amber light comes on when mode 5 is activated. The aural "GLIDE SLOPE" warning accompanies it.

Note : If the flight crew presses this button briefly when a glide slope warning is on, the G/S light goes out and the "GLIDE SLOPE" aural warning (soft or loud) stops.

To test the GPWS, flight crew can push this button briefly :

· In flight, above 2000 feet RA and below 8000 feet RA :
- GPWS FAULT light comes on on the overhead panel
- The soft "GLIDE SLOPE" aural warning sounds
- The "PULL UP" aural warning sounds (once)
- TERR FAULT light comes on
- R the "TERRAIN AHEAD PULL UP" or "TERRAIN TERRAIN PULL UP" (◁) aural warning sounds
- the terrain self-test pattern is displayed on both NDs
- The GPWS and G/S lights come on.

· On ground :
As above, plus pressing the switch either continually or during the "PULL UP" sequence, makes all aural warnings sound.

R

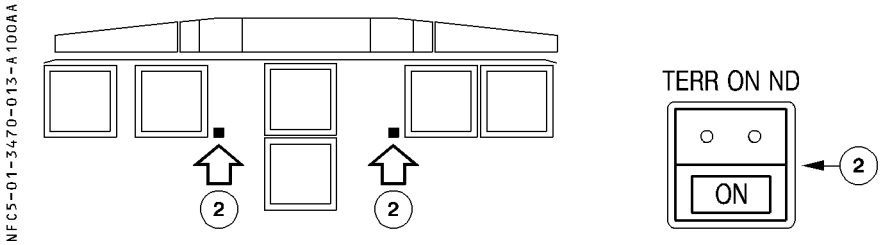

(2) TERR ON ND pb sw

These switches are located on either side of the ECAM. Each switch controls the onside terrain display.

R ON : The terrain is displayed on the ND if :
R – TERR pushbutton is selected ON, and
R – TERR FAULT light is not on, and
R – the FMGS navigation accuracy is high.
R The ON light comes on.
OFF : The terrain data is not displayed on the ND.

Note : · *If the Terrain Awareness Display (TAD) mode generates a caution or a warning while the TERR ON ND is not switched ON the terrain data is automatically displayed on the NDs (see EGPWS specific caution and warning due to TAD mode) and the ON light comes on, on the TERR ON ND pushbutton.*
· *To differenciate between the terrain and the weather display, the terrain display sweeps from the center outward to both sides of the ND.*

WARNINGS AND CAUTIONS

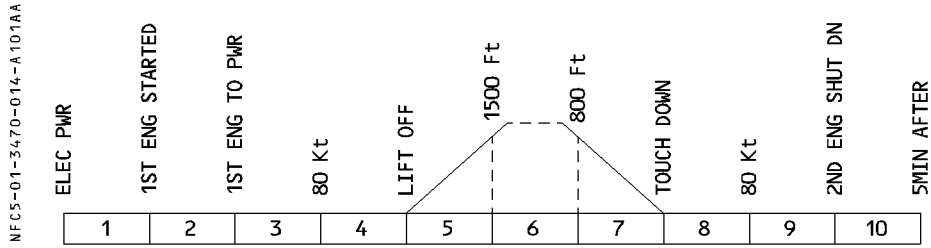

E / WD : FAILURE TITLE conditions	AURAL WARNING	MASTER LIGHT	SD PAGE CALLED	LOCAL WARNING	FLT PHASE INHIB
GPWS FAULT	SINGLE CHIME	MASTER CAUT	NIL	GPWS SYS FAULT lt	1, 3, 4, 5, 8, 9, 10
GPWS TERR DET FAULT The enhanced terrain detection function is inoperative. The basic GPWS mode 1 to 5 are still operative.				GPWS TERR FAULT lt	1, 3, 4, 5 8,10

MEMO DISPLAY

GPWS FLAP 3 is displayed in green when GPWS LDG FLAP 3 pushbutton switch is ON. GPWS FLAP MODE OFF is displayed in green when GPWS FLAP MODE pushbutton switch is OFF.

R Airborne TERR STBY appears in green when the aircraft position accuracy (provided by the
R FMS) is not sufficient to allow the enhanced TCF and TAD modes to operate. These modes
R are not available until the TERR STBY memo disappears. If selected, the terrain data display
R on ND is automatically deselected when the TERR STBY memo is triggered."

DESCRIPTION

GENERAL

The TCAS (Traffic alert and Collision Avoidance System) :
- Detects any aircraft, equipped with transponders, flying in its vicinity ;
- Displays potential and predicted collision targets ;
- Issues vertical orders to avoid conflict.

The TCAS is normally independent of the ground-based air traffic control system.
The TCAS detection capability is limited to intruders flying within a maximum range of 30-40 NM (depending on aircraft configuration and external conditions), and within a
R maximum altitude range of 9900 feet (above and below the threatened aircraft).

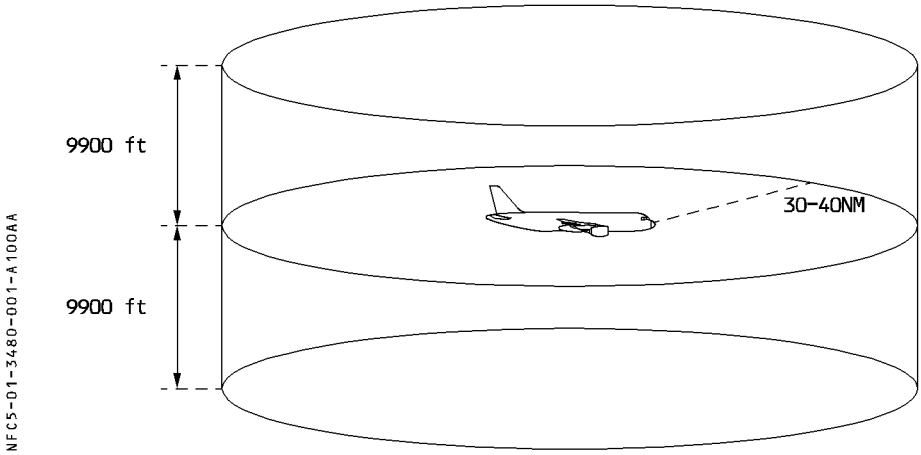

MAIN COMPONENTS

The system includes :
- a single channel TCAS computer
- two TCAS antennas
- two mode S ATC transponders, one active the other in standby.
  These transponders allow :
  · interface between the ATC / TCAS control panel and the TCAS computer
  · communication between the aircraft and intruders equipped with a TCAS system
- an ATC /TCAS control panel.

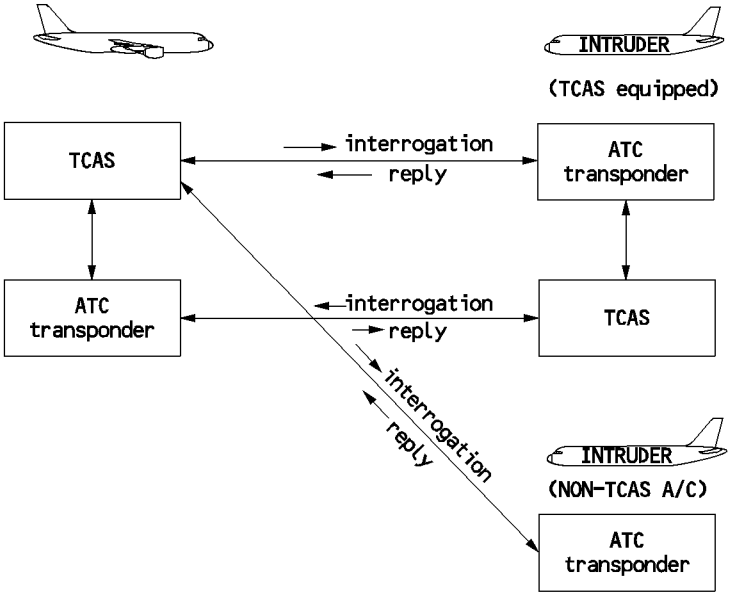

NFC5-01-3480-002-A100AA

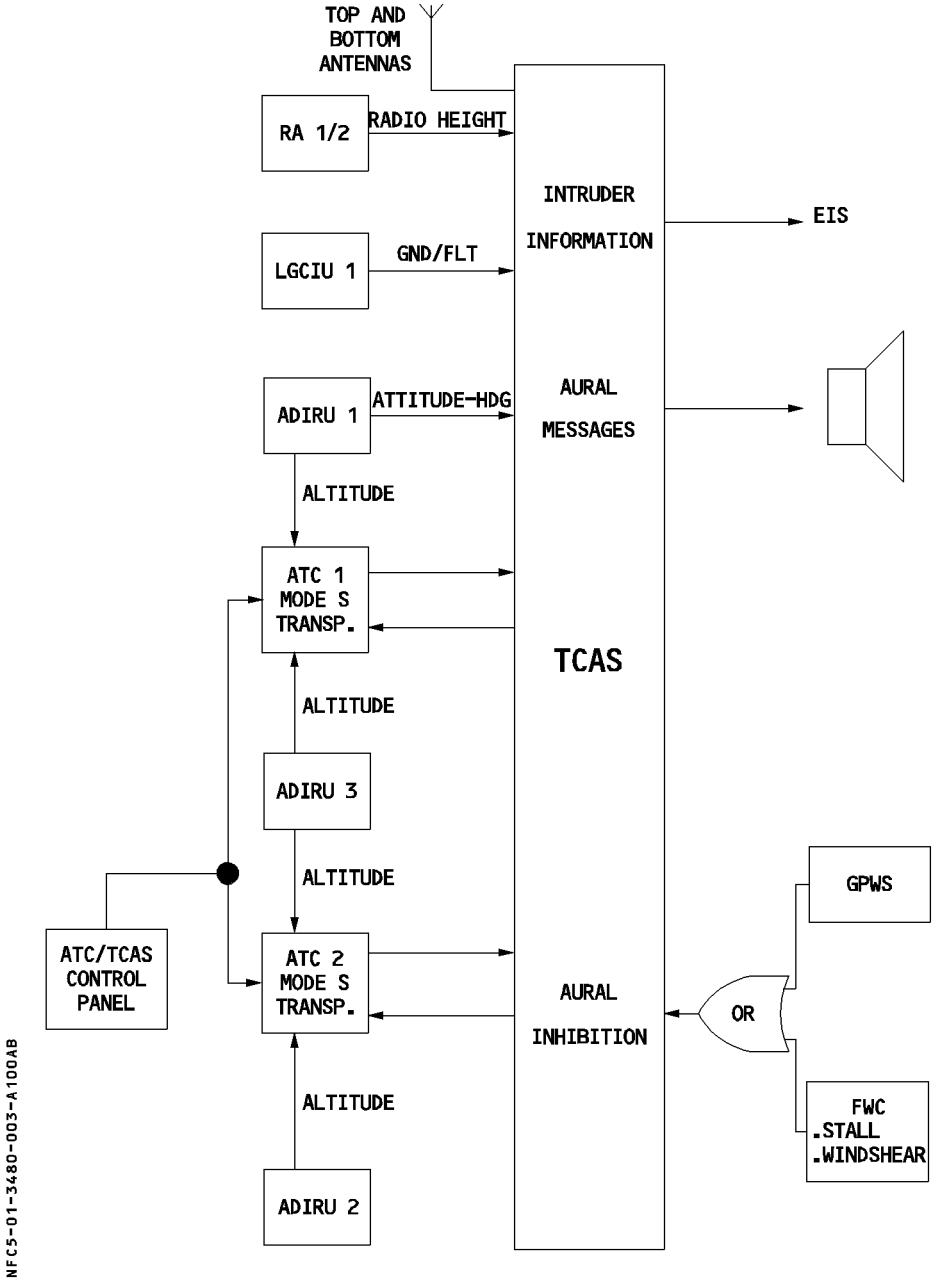
TOP AND
BOTTOM
ANTENNAS
RA 1/2
RADIO HEIGHT
INTRUDER
INFORMATION
EIS
LGCIU 1
GND/FLT
ADIRU 1
ATTITUDE-HDG
AURAL
MESSAGES
ALTITUDE
ATC 1
MODE S
TRANSP.
TCAS
ALTITUDE
ADIRU 3
ALTITUDE
GPWS
ATC/TCAS
CONTROL
PANEL
ATC 2
MODE S
TRANSP.
AURAL
INHIBITION
OR
ALTITUDE
FWC
.STALL
.WINDSHEAR
ADIRU 2
NFC5-01-3480-003-A100AB

PRINCIPLE

The TCAS interrogates transponder of intruders. From the transponder replies, the TCAS determines for each intruder :
- its relative bearing
- its range and closure rate
- its relative altitude if available (ATC mode C or S)

Then the TCAS computes the intruder trajectory, the Closest Point of Approach (CPA) and the estimated time (TAU) before reaching the CPA.
Each time the relative position of the intruder presents a collision threat, aural and visual advisories are triggered.
TCAS optimizes vertical orders to ensure a sufficient trajectory separation and a minimal vertical speed variation considering all intruders.

INTRUDER CLASSIFICATION

The intruders are classified in four levels :

LEVEL	INTRUDER POSITION	DISPLAYED INFORMATION
Proximate	– no collision threat – intruder in the vicinity of the a/c (closer than 6 NM laterally and ± 1200 ft vertically)	– ND : intruder position
Traffic Advisory (TA)	– potential collision threat – TAU is about 40 seconds	– ND : intruder position – Aural messages
Resolution Advisory (RA)	– real collision threat – TAU is about 25 seconds	– ND : intruder position – Aural messages – PFD : vertical orders · Maintain actual V/S (Preventive Advisory) or · Modify V/S (Corrective Advisory)
Other intruders (◁)	– no collision threat – any non proximate, TA, RA within the surveillance envelope (lateral range : closer than 30 NM. vertical range : Refer to 1.34.80 p 7)	– ND : intruder position

TA / RA THRESHOLDS

FOR INFO

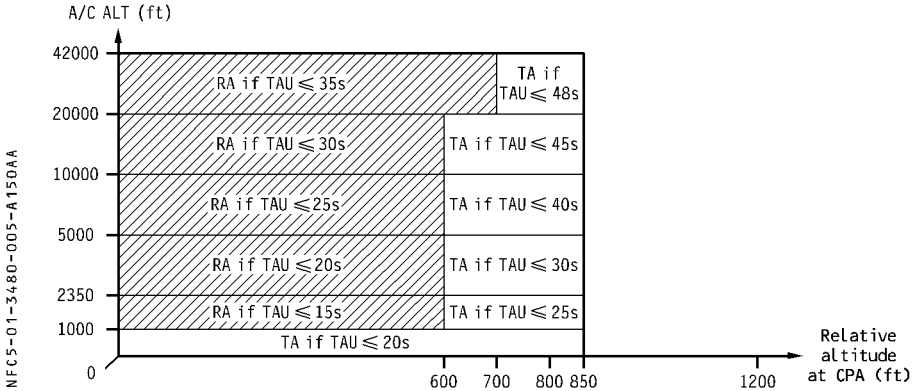

TCAS MODES

TCAS has 2 modes of operation :

TA/RA : This mode allows the display of all the intruders.

TA : Can be selected by :

- the crew, on the ATC/TCAS panel, in case of aircraft degraded performance (engine failure, landing gear extended) or when operating near closely spaced runways, or
- automatically, when the following messages are triggered :
  - windshear (◁)
  - stall
  - GPWS messages

R

Consequently :

- All RAs are inhibited and converted into TAs
- the TA threshold is set to TAU ≤ 20 seconds, irrespective of the aircraft's altitude.
- No vertical speed advisories are indicated on the PFDs
- "TA ONLY" is displayed on the NDs

If windshear, stall or GPWS messages are triggered, all the TCAS aural messages are suppressed.

ADVISORY INHIBITION

Some advisories are inhibited depending on the aircraft altitude :

- all intruders flying below 380 feet AGL when the own aircraft altitude is below 1700 feet AGL.
- all RA below 1100 feet in climb and 900 feet in descent. In this case, the RAs are converted into TAs.
- "Descend" type advisory below 1200 feet AGL at takeoff or 1000 feet AGL in approach.
- "Increase Descent" RA below 1450 feet.
- all TA aural messages below 500 feet AGL

CONTROLS AND INDICATORS

ATC/TCAS PANEL

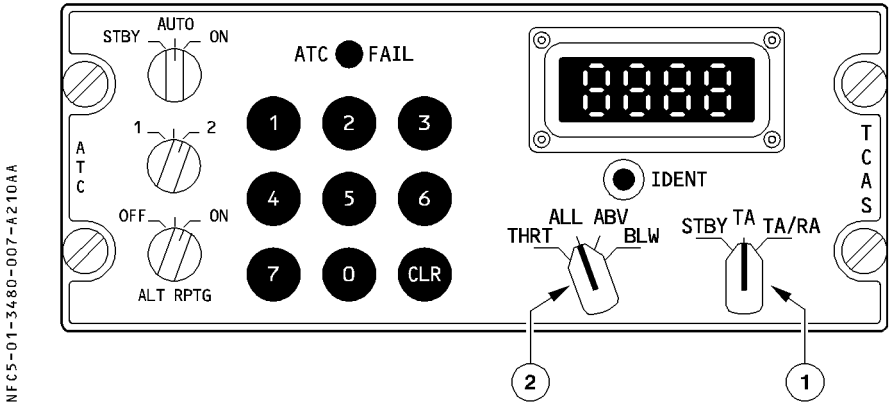

(1) Mode sel

TA/RA : Normal position.
The RAs, TAs and proximate intruders are displayed, if the ALT RPTG switch is ON and the transponder is not on STBY.

TA : The TCAS does not generate any vertical orders. This mode should be used in case of aircraft degraded performance (engine failure, landing gear extended...), or on parallel runways.
All RAs are converted into TAs. TAs, proximate and other intruders are displayed, if the ALT RPTG switch is ON and the transponder is not on STBY.
The TA ONLY white memo is displayed on the NDs.

STBY : The TCAS is on standby.

(2) TRAFFIC sel

R THRT : Proximate and other intruders are displayed only if a TA or RA is present,
R and they are within 2700 feet above and 2700 feet below the aircraft.
R ALL : Proximate and other intruders are displayed even if no TA or RA is present
R (full time function). The altitude range is – 2700 feet to + 2700 feet.
R ABV : The same as ALL, except that the other intruders are displayed if within
R 9900 feet above the aircraft and 2700 feet below.
R BLW : The same as ALL, except that the other intruders are displayed if within
R 9900 feet below the aircraft and 2700 feet above.

ND INDICATIONS

The traffic is displayed in all ROSE modes and ARC mode. Only the 8 most threatening intruders are displayed.

R

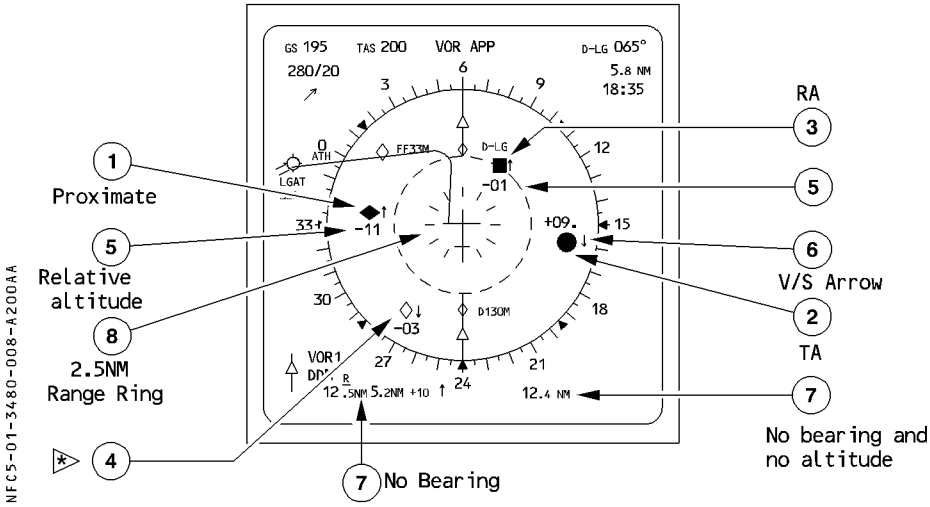

(1) Proximate intruder

Indicated by a white filled diamond.

(2) TA intruder

Indicated by an amber circle.
Associated with the TRAFFIC-TRAFFIC aural message.

(3) RA intruder

Indicated by a red square.
Associated with vertical orders displayed on the PFD and aural messages.

(4) Other intruders ◁

Indicated by a white empty diamond.

Note : If the range of an intruder is not available, the intruder is not displayed.
An intruder may be partially displayed when its range is out of scale.

(5) Relative altitude

Indicated in hundred of feet above or below the symbol depending on the intruder position.

(6) Vertical speed arrow

Displayed only if the intruder V/S > 500 feet/minute
Relative altitude and vertical speed arrow are displayed in the same color as the associated intruder symbol.

Note : If the altitude of an intruder is not available, neither altitude nor vertical speed indications are displayed.

(7) No bearing intruder

If the bearing of TA or RA intruder is not available the following data is presented in digital form at the bottom of the ND :
– range
– relative altitude and vertical speed arrow if available.
Displayed amber or red according to threat level.

(8) Range ring

A 2.5 NM white range ring is displayed when a 10 or 20 NM range is selected.

TCAS MESSAGES

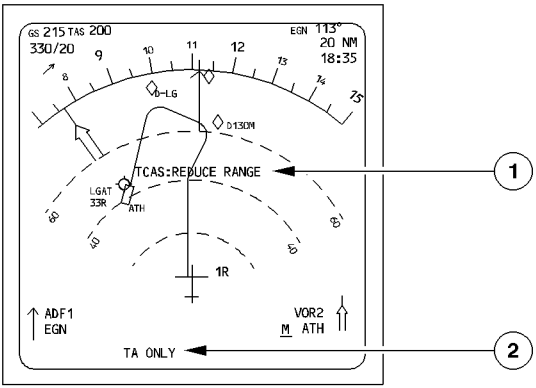

NFC5-01-3480-010-A100AA

(1) Mode and range messages

Following messages can be displayed to draw pilot's attention :

TCAS : REDUCE RANGE : displayed when a TA or RA is detected and ND range above 40 NM

TCAS : CHANGE MODE : displayed when a TA or RA is detected and ND mode is PLAN.

Displayed amber or red depending on the advisory level (TA or RA).
Flash 9 seconds then remain steady.

(2) TCAS operation messages

TCAS : displayed red in case of TCAS internal failure.
Flashes 9 seconds then remains steady.

TA ONLY : displayed white when selected by the crew.

PFD INDICATIONS

In case of RA detection, the PFD presents vertical orders on the vertical speed scale. The vertical speed scale background is normally grey, but may be partially replaced by green and/or red areas.

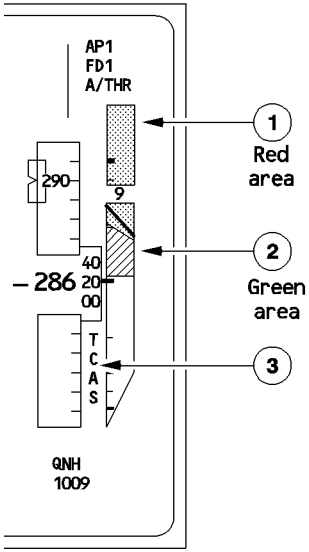

NFC5-01-3480-011-A100AA

(1) Red area

Indicates the vertical speed range, where the risk of conflict is high.

(2) Green area

Indicates the recommended vertical speed range.

Note : – *The aircraft can also fly in the grey vertical speed range without the risk of conflict (preventive RA).*
– *The color of the vertical speed needle and the digits corresponds to the appropriate area.*

(3) TCAS message

Appears in red when TCAS cannot deliver RA data, or in case of TCAS internal failure.

AURAL MESSAGES

TA/RA detection is associated with the following messages :

"TRAFFIC TRAFFIC"	: Only in case of TA detection.
"CLIMB CLIMB"	: Climb at the vertical speed indicated by the green area on the PFD.
"CLIMB, CROSSING CLIMB" (twice)	: Same as above. Indicates that you will cross through the intruder altitude.
"INCREASE CLIMB" (twice)	: Triggered after the CLIMB message, if vertical speed is insufficient to achieve safe vertical separation.
"DESCEND DESCEND"	: Descend at the vertical speed indicated by the green area on the PFD.
"DESCEND, CROSSING DESCEND" (twice)	: Same as above. Indicates that you will cross through the intruder altitude.
"INCREASE DESCEND" (twice)	: Triggered after the DESCEND message, if the vertical speed is insufficient to achieve safe vertical separation.
"ADJUST VERTICAL SPEED, ADJUST"	: Adjust the vertical speed to that indicated on the green area of the PFD, reducing climb vertical speed or descent vertical speed, as appropriate.
"CLIMB CLIMB NOW" (twice)	: Triggered after the DESCEND message, if the intruder trajectory has changed.
"DESCEND DESCEND NOW" (twice)	: Triggered after the CLIMB message, if the intruder trajectory has changed.
"MONITOR VERTICAL SPEED"	: Ensure that the vertical speed remains outside the red area. Triggered only once, in case of preventive RA.
"MAINTAIN VERTICAL SPEED, MAINTAIN"	: Maintain the vertical speed indicated on the green area of the PFD.
"MAINTAIN VERTICAL SPEED, CROSSING MAINTAIN"	: Maintain the vertical speed indicated on the green area of the PFD. Indicates that you will cross through the intruder altitude.
"CLEAR OF CONFLICT"	: The range inreases and separation is adequate. Return to assigned clearance.

R

WARNINGS AND CAUTIONS

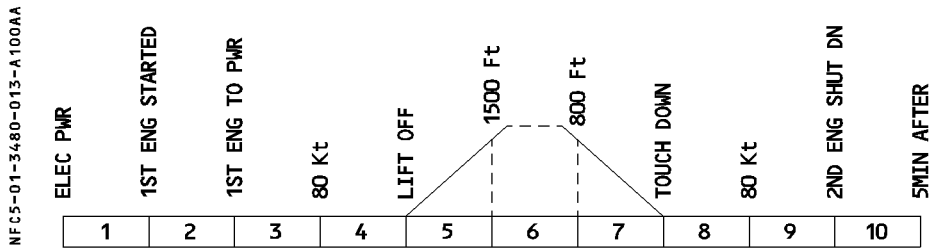

E / WD: FAILURE TITLE conditions	AURAL WARNING	MASTER LIGHT	SD PAGE CALLED	LOCAL WARNING	FLT PHASE INHIB
TCAS FAULT in case of TCAS internal failure	SINGLE CHIME	MASTER CAUT	NIL	Flag on PFD and ND	3, 4, 5, 7

MEMO DISPLAY

TCAS STBY is displayed green when :
- ATC STBY or TCAS STBY is selected by the crew, or
- ALT RPTG is selected at off, or
- both ATC or both RA are failed.

BUS EQUIPMENT LIST

R

		NORM		EMER ELEC		
		AC	DC	AC ESS	DC ESS	HOT
ADIRU	ADIRU 1			X		HOT 2 *
	AOA RESOLVER 1			X		
	ADIRU 2	AC2				HOT 2 ** during 5 mn
	AOA RESOLVER 2	AC2				
	ADIRU 3	AC1				HOT 1 ***
	AOA RESOLVER 3	AC1				
STD BY INST	HORIZON				X	
	ALTIMETER				SHED	
	COMPASS				X	
NAVAIDS	VOR 1			X		
	VOR 2	AC2				
	MMR 1			X		
	MMR 2	AC2				
	ADF 1			SHED		
	ADF 2 ◁	AC2				
	DDRMI			X		
	DME 1			SHED		
	DME 2	AC2				
RADIO ALTIMETER	RA 1	AC1				
	RA 2	AC2				
ATC	ATC 1			SHED		
	ATC 2	AC2				
GPWS		AC1				
WEATHER RADAR	WX 1	AC1				
	WX 2	AC2				
TCAS ◁		AC1				

* Backup supply.
** Backup supply for 5 minutes.
*** Backup supply, when the ATT HDG is in the CAPT 3 position.
Backup supply for 5 minutes, when the ATT HDG is in the NORM or F/03 position.